City of Missoula, MT

Garden City Compost Improvements Project 2025

Contract Documents

Published: February 19, 2025

Prepared by:
Anderson-Montgomery
Consulting Engineers
Helena, MT

In Partnership with:

CITY OF MISSOULA, MONTANA

Garden City Compost Improvements Project - 2025

Bidding Requirements and Contract Documents

Professional Certifications

February 14, 2025

The following Contract Provisions and discipline-related content of these contract documents were prepared and/or modified by or under the supervision of the undersigned, Professional Engineers who currently hold valid licenses in the State of Montana, as issued by the Montana Board of Professional Engineers and Professional Land Surveyors.

Prepared by:

Paul Montgomery, P.E.

MONTANA
Paul W. Montgomery
9265PE
REGISTERED
PROFESSIONAL ENGINEER

Anderson~Montgomery
CONSULTING ENGINEERS

Reviewed by:

Adam Eckhart, P.E.

MONTANA
ADAM ECKHART
22602PE
LICENSED
PROFESSIONAL ENGINEER

In Partnership with:

Jacobs

Cushing Terrell

RPA

MONTANA
ALAN BRONEC
11707 PE
LICENSED
PROFESSIONAL ENGINEER

CITY OF MISSOULA

MISSOULA, MONTANA

BIDDING REQUIREMENTS AND CONTRACT DOCUMENTS

for

GARDEN CITY COMPOST FACILITY IMPROVEMENTS

Professional Certifications

The following Contract Provisions and discipline-related content of this contract specifications book were prepared and/or modified by or under the supervision of the undersigned, Professional Engineers who currently hold valid licenses in the State of Montana, as issued by the Montana Board of Professional Engineers and Professional Land Surveyors.

Instrumentation and Controls	Process Mechanical
40 90 00B, 40 91 00B and 40 95 80B	40 05 64, 43 11 19, 44 10 00 and portions of 40 27 00, 40 27 05, 40 27 10, 40 42 80

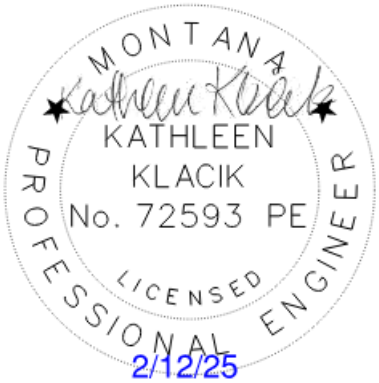

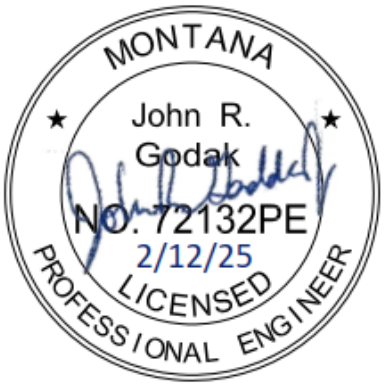

February 12, 2025

TABLE OF CONTENTS

City of Missoula Garden City
Compost Improvements Project - 2025

DIVISION 0 – BIDDING AND CONTRACTING REQUIREMENTS

NUMBER	TITLE
	WHITE SECTION
00 11 16	Invitation to Bid
00 21 13	Instructions to Bidders
	YELLOW SECTION
00 41 00	Bid Form
00 43 13	Bid Bond Form (EJCDC Form No. 1910-28-D (1996))
00 43 93	Bidders Checklist
00 45 13	Bidder Qualifications Form (EJCDC C-451)
	WHITE SECTION
00 51 00	Notice of Award
00 52 00	Agreement
00 55 00	Notice to Proceed
00 61 10	Performance Bond (EJCDC No. 1910-28-A)
00 61 13	Payment Bond (EJCDC No. 1910-28-A)
00 62 76	Application for Payment
00 63 49	Work Change Directive (EJCDC C-940)
00 63 63	Change Order Form (EJCDC C-941)
00 65 16	Certificate of Substantial Completion (EJCDC C-625)
	BLUE SECTION
00 72 00	Standard General Conditions (EJCDC C-700, 2007 Edition)
00 73 00	Supplementary Conditions to the General Condition
	PINK SECTION
00 85 00	Federal Davis-Bacon Wage Decision – Effective January 17, 2025 – Heavy
00 86 00	Montana Prevailing Wage Rates – Effective January 11, 2025 – Heavy
	GOLD SECTION
00 90 00	Funding Agency Special Provisions for Montana Public Facility Projects
00 95 10	Special Provisions

DIVISION 1 – GENERAL REQUIREMENTS

NUMBER	TITLE
01 11 00	Summary of Work
01 12 16	Work Sequence
01 20 00	Required Forms
01 26 00	Contract Modification Procedures
01 27 00	Measurement & Payment
01 29 00	Payment Procedures
01 31 00	Project Management and Coordination
01 32 00	Construction Progress Documentation
01 33 00	Submittal Procedure
01 40 00	Quality Requirements
01 50 00	Temporary Facilities and Controls
01 60 00	Product Requirements
01 70 00	Execution Requirements
01 75 00	Starting and Adjusting
01 77 00	Closeout Procedures
01 78 23	Operation and Maintenance Data
01 78 39	Project Record Documents
01 79 00	Classroom and Demonstration Training
01 91 00	Commissioning

DIVISION 2 – EXISTING CONDITIONS, SITEWORK

NUMBER	TITLE
02 41 00	Site Demolition
02 42 00	Removal & Salvage of Construction Materials
02 70 00	Sewerage & Drainage - *Montana Public Works Standard Specifications Sections 02720, 02725 and 02730 included herein by Reference*

DIVISION 3 – CONCRETE & GROUT

NUMBER	TITLE
03 10 00	Concrete Forming and Accessories
03 20 00	Concrete Reinforcing
03 30 00	Cast-In-Place Concrete
03 31 19	Shrinkage-Compensating Structural Concrete
03 41 00	Precast Concrete Structures
03 60 00	Grout

DIVISION 5 – METALS

NUMBER	TITLE
05 50 00	Metal Fabrications

DIVISION 7 – THERMAL & MOISTURE PROTECTION

NUMBER	TITLE
07 11 00	Dampproofing
07 21 00	Building Insulation
07 90 00	Joint Sealers

DIVISION 9 – FINISHES, PAINT & COATINGS

NUMBER	TITLE
09 06 00	Schedule for Finishes
09 90 00	Painting & Coating
09 90 02	High Performance Painting & Coating

DIVISION 13 – SPECIAL STRUCTURES

NUMBER	TITLE
13 34 21	Pre-Fabricated Control Shed
13 34 23	ConEx Container Building

DIVISION 23 – HVAC

NUMBER	TITLE
23 01 00	HVAC
23 05 93	Testing, Adjusting and Balancing Process Air Flow
23 31 13	Metal Ducts

DIVISION 26 – ELECTRICAL

NUMBER	TITLE
26 03 00	Demolition/Remodel
26 05 00	Common Work Results for Electrical
26 05 19	Low-Voltage Electrical Power Conductors & Cables
26 05 26	Grounding and Bonding for Electrical Systems
26 05 33	Raceways and Boxes for Electrical Systems
26 05 53	Identification for Electrical Systems
26 22 00	Low-Voltage Transformers
26 24 16	Panelboards
26 27 26	Wiring Devices
26 28 16	Enclosed Switches and Circuit Breakers
26 29 23	Variable Frequency Motor Controller
26 32 13	Engine Generators
26 36 23	Automatic Transfer Switch
26 51 19	LED Interior Lighting
26 52 19	Emergency Lighting
26 56 19	LED Exterior Lighting

DIVISION 27 – COMMUNICATIONS

NUMBER	TITLE
27 11 16	Communications Racks, Frames, and Enclosures
27 15 13	Communications Copper Horizontal Cabling
27 15 23	Communications Optical Fiber Horizontal Cabling

DIVISION 31 – EARTHWORK

NUMBER	TITLE
31 00 00	Earthwork
31 05 31	Soils for Earthwork
31 10 00	Site Clearing
31 11 10	Removal of Existing Pavement, Concrete Curb, Sidewalks, etc.
31 22 00	Grading
31 23 13	Subgrade Preparation
31 23 16	Excavation
31 23 21	Fill & Backfill
31 23 33	Trenching & Backfilling
31 25 00	Erosion & Sedimentation Controls
31 41 00	Shoring

DIVISION 32 – EXTERIOR IMPROVEMENTS

NUMBER	TITLE
32 05 16	Aggregates for Exterior Improvements
32 05 19	Geosynthetics for Exterior Improvements
32 97 00	Restoration of Disturbed Areas

DIVISION 33 – UTILITIES

NUMBER	TITLE
33 05 26	Utility Identification
33 11 16	Irrigation Water Supply Well
33 11 36	Submersible Centrifugal Well Pumps
33 32 13	Packaged Wastewater Pumping Station
33 32 16	Duplex Grinder Pump Station

DIVISION 40 – PROCESS INTERCONNECTIONS

NUMBER	TITLE
40 05 64	Dampers for Corrosive Gas Service
40 27 00	Process Piping
40 27 05	Process Piping Hangers and Supports

40 27 10 Process Piping Specialties
40 42 80 Process Piping Leakage Testing
40 90 00 Instrumentation and Controls for Process Systems
40 91 00 Instrumentation and Control Components
40 95 80 Fiber Optic Communication Systems

DIVISION 43 – PROCESS GAS & LIQUID HANDLING

NUMBER	TITLE
43 11 19	Centrifugal Fans & Blowers

DIVISION 44 – POLLUTION AND WASTE CONTROL EQUIPMENT

NUMBER	TITLE
44 10 00	Compost Biofilter Odor Control System

APPENDICES

APPENDIX A – PROJECT DRAWINGS (See bound copy of Construction Drawings)
APPENDIX B – DEQ STORMWATER & DEWATERING PERMIT FORMS
APPENDIX C – PIONEER GEOTECHNICAL REPORTS 2017 & 2024
APPENDIX D – GROUNDWATER MONITORING DATA: 2018-2024

DIVISION 0

BIDDING & CONTRACTING

SECTION 00 11 16
INVITATION TO BID

Notice is hereby given that electronic Bids for the ***Garden City Compost Facility Improvements Project - 2025*** will be received ***via QuestCDN*** by the City of Missoula, MT 59802, **until 2:00 p.m. local time on Friday, March 14, 2025**, and then publicly opened and read aloud via virtual Microsoft Teams Meeting. The Teams meeting access information will be electronically sent to all official plan holders one day prior to the bid opening.

The project will include the furnishing of all labor, skill, equipment, and construction materials to construct the proposed improvements to the City of Missoula's Garden City Compost facility improvements in accordance with the plans and specifications. Bids will be for a single prime contract, bid on a combined lump sum and unit price basis.

The project will generally consist of the following work:

1. The **Base Bid** Work is generally described as follows:
   - Excavation and onsite stockpiling of approximately 15,000 yd^3 of unsuitable fill material;
   - Import, backfill and compaction of approx. 22,300 yd^3 of 4"-minus structural fill;
   - 12-bay, aerated static pile (ASP) composting system with reversing pressure operating capabilities – complete with: blowers; VFD's; aeration piping; dampers; in-floor aeration grates; concrete slab, push walls & footings; embedments; condensate collection and conveyance system;
   - Two biofilters – complete with blowers; VFD's; delivery/diffuser piping; dampers; irrigation system; mud mat, concrete slab, containment walls & footings;
   - Runoff collection system including three catch basins, submersible lift station and forcemain to the Missoula WRF plant drain;
   - Sensing & control system - complete with wireless temperature probes O_2 sensors, manual dampers, communications, outputs to VFD's, data logging, alarms, etc.;
   - New biosolids cake storage bin and pre-compost bin with new concrete slabs, embedments and cast-in-place walls/footings;
   - Conex Control Building – support piers; HVAC; doors; windows; lighting; electrical;
   - Condensate Collection: piping; sumps; grinder pump station; forcemain;
   - Concrete rumble grate trough;
   - Irrigation supply system: drilled groundwater well; casing; screen; drop pipe; pitless; piping; pump; pressure control system; irrigation control system; sprinkler piping and rotary heads;
   - Ancillary site improvements, utility piping, communications systems and surface restoration

2. The **Additive Alternate A** Work is generally described as:
   - Five-bay, aerated curing system utilizing one blower, VFD, diffuser piping and Eco-Blocks from the City's existing "Transitional Facility" as well as one new blower, VFD and new diffuser piping;
3. The Additive Alternate B Work is generally described as:
   - Excavation and onsite stockpiling of approximately 1,820 yd^3 of unsuitable fill material;
   - Import, backfill and compaction of approx. 3,120 yd^3 of 4"-minus structural fill;

Prospective Bidders must purchase contract documents through Quest Construction Data Network (QuestCDN) via the following link: www.questcdn.com. Prospective bidders must register for a free "Regular Membership" and access the bid information by typing in Quest Number **9481350** after registration on the search page. There is a $42 non-refundable cost for downloading the contract documents in .pdf format, and submitting an electronic bid via QuestCDN's VirtuBid platform. Contact Client Success at (952) 233-1632 or Success@QuestCDN.com for registration help. Bids will not be accepted from any prospective bidder who has not purchased contract documents through QuestCDN.

Complete instructions for obtaining bid documents and filing official bids are included in the Instructions to Bidders Section 00 21 13.

Contract documents can be examined online at www.questcdn.com or at Anderson-Montgomery Consulting Engineers' website at www.a-mce.com, available after February 17, 2025. Bidders must acquire a numbered set of drawings & specifications on QuestCDN in order to be placed on the official plan holders list and to submit a responsive bid.

There will be a *Pre-Bid Conference* at the Missoula's Water Reclamation Facility, 1100 Clark Fork Lane, Missoula, MT 59808 (Phone 406-552-6600 for detailed directions) at 1:00 p.m. **Thursday, March 6, 2025**. Interested BIDDERS are **required** to have at least one representative attend in person. Participants will be touring the project site: advised to dress for the weather and bring hardhat/hi-viz vest. The Pre-Bid Conference may be accessed virtually via Microsoft Teams at the following link:

Meeting ID: 935 439 337 950 8 Passcode: 5rL2Mf

CONTRACTORS and any of the CONTRACTOR's subcontractors submitting a bid on this project will be required to obtain registration with the Montana Department of Labor and Industry (DLI) Contractor Registration Unit prior to submitting bids. Forms for registration are available from the Department of Labor and Industry, P.O. Box 8011, 1805 Prospect, Helena, Montana 59604-8011. Information on registration can be obtained by calling 1-406-444-7734. All laborers and mechanics employed by CONTRACTOR or subcontractors in performance of the construction work shall be paid wages at rates as may be required by the laws of and the state of Montana. The CONTRACTOR must ensure that employees and applicants for employment are not discriminated against because of their race, color, religious views, gender or national origin. The **highest** of Montana Prevailing Wage **or** Federal Davis-Bacon Wage Rates apply to this project.

Each bid or proposal must be accompanied by a Bid Bond payable to the City of Missoula, in an amount not less than ten percent (10%) of the total amount of the bid, as per the Instructions to Bidders. Successful BIDDERS shall furnish an approved Performance Bond and a Labor and Materials Payment Bond, each in the amount of one hundred percent (100%) of the contract amount. Insurance as required shall be provided by the successful BIDDER(s) and a certificate(s) of that insurance shall be provided. Bidders must demonstrate their qualifications to do the work.

This project is funded with grant and loan funding from the MDEQ State Revolving Fund Loan Program and the American Rescue Plan Act (ARPA) program administered by the MDNRC. Award of the project will be contingent upon available funding and award concurrence from the MDNRC and MDEQ. American Iron & Steel (AIS) and Buy America, Build America Act (BABAA) provisions apply.

The City of Missoula is an Equal Opportunity Employer. The Contractor is required to be an Equal Opportunity Employer and must comply with the City's Affirmative Action Policy.

No bid may be withdrawn after the scheduled time for the public opening of bids.

The City of Missoula reserves the right to reject any or all proposals received, to waive informalities, to postpone the award of the contract for a period of not to exceed sixty (60) days, and to accept the lowest responsive and responsible bid which is in the best interest of the OWNER.

BIDDERS are cautioned that operation of the existing compost operation must continue throughout construction of the new facility. The OWNER will make necessary provisions to re-route heavy equipment traffic around the construction zone to the greatest extent possible and will conduct its mixing, composting, screening and curing processes outside the direct footprint of the new facility.

Please publish in the Missoulian on:

February 22, 2025
March 1, 2025

END OF SECTION 00 11 16

SECTION 00 21 13
INSTRUCTIONS TO BIDDERS

ARTICLE 1 - DEFINED TERMS

1.01 Terms used in these Instructions to Bidders have the meanings indicated in the General Conditions and Supplementary Conditions. Additional terms used in these Instructions to Bidders have the meanings indicated below:

A. *Issuing Office* – The office from which the Bidding Documents are to be issued and bidding procedures are to be administered.

1. For purposes of this document, the Issuing Office shall be as follows:

Anderson-Montgomery Consulting Engineers, Inc.
1064 N. Warren St. Helena, MT 59601

B. *OWNER* – The City of Missoula, Montana

C. *Bidder* - The Individual or entity who submits a Bid directly to the OWNER

D. *Successful Bidder* – The lowest responsible Bidder submitting a responsive Bid to whom OWNER (on the basis of OWNER's evaluation is hereinafter provided) makes an award.

E. *Project Site* – The Garden City Compost Facility at 1125 Clark Fork Lane in Missoula, MT 59808

ARTICLE 2 - ACQUISITION OF BIDDING DOCUMENTS

2.01 Complete sets of the Bidding Documents may be previewed at the ENGINEER's website at www.a-mce.com ("Project Documents" link) or through Quest Construction Data Network (QuestCDN) further described below.

2.02 Prospective Bidders **must** purchase contract documents through QuestCDN via the following link: www.questcdn.com - reference Quest Number **9481350** after registration on the search page. To be considered an official plan holder, register with Quest for a free "Regular Membership" and obtain a QuestCDN identification number. An official plan set in .pdf format can be downloaded for a $42 non-refundable fee.

2.03 To access the VirtuBid (vBid) form, click the online bidding button at the top of the bid advertisement. The online bid button will be available when the Project is published and open for bidding.

2.04 Contact Client Success at (952) 233-1632 or Success@QuestCDN.com for registration help. Bids will not be accepted from any prospective bidder who has not purchased contract documents through QuestCDN.

2.05 Complete sets of Bidding Documents shall be used in preparing Bids; neither OWNER nor Engineer assumes any responsibility for errors or misinterpretations resulting from the use of incomplete sets of Bidding Documents. Only official plan holders will be notified of and receive project addenda and updates which will only be published through QuestCDN.

2.06 Only official plan holders will have access to VirtuBid online bidding via QuestCDN.

ARTICLE 3 - QUALIFICATIONS OF BIDDERS

3.01 To demonstrate Bidder's qualifications to perform the Work, Bidder shall submit with its Bid the following additional information (forms posted on QuestCDN – Number 9481350) under "Bid Requirements":

A. Evidence of Bidder's authority to do business in the State of Montana;

B. Bidder's contractor license number;

C. Completed Form C-451 – Qualification Statement and required attachments;

D. Subcontractor and Supplier qualification information;

1. Coordinate with provisions of Article 12 of these Instructions, "Subcontractors, Suppliers, and Others."

E. DBE Subcontractor Solicitation Information

F. SRF Certifications regarding Debarment, Suspension, and other Responsibility Matters

3.02 A Bidder's failure to submit required qualification information within the times indicated <u>may</u> disqualify Bidder from receiving an award of the Contract – at the sole discretion of the OWNER.

3.03 No requirement in this Article 3 to submit information will prejudice the right of OWNER to seek additional pertinent information regarding Bidder's qualifications.

3.04 Bidder is advised to carefully review those portions of the Bid Form requiring Bidder's representations and certifications.

ARTICLE 4 - SITE AND OTHER AREAS; EXISTING SITE CONDITIONS; EXAMINATION OF SITE; OWNER'S SAFETY PROGRAM; OTHER WORK AT THE SITE

4.01 SITE AND OTHER AREAS

A. The Site is identified in the Bidding Documents. By definition, the Site includes rights-of-way, easements, and other lands furnished by OWNER for the use of the Contractor. Any additional lands required for temporary construction facilities, construction equipment, or storage of materials and equipment, and any access needed for such additional lands, are to be obtained and paid for by Contractor.

4.02 EXISTING SITE CONDITIONS

A. Subsurface and Physical Conditions; Hazardous Environmental Conditions

1. The Supplementary Conditions identify:

a. Those reports known to OWNER of explorations and tests of subsurface conditions at or adjacent to the Site.

b. Those drawings known to OWNER of physical conditions relating to existing

surface or subsurface structures at the Site (except Underground Facilities).

c. Reports and drawings known to OWNER relating to Hazardous Environmental Conditions that have been identified at or adjacent to the Site.

d. Technical Data contained in such reports and drawings.

2. OWNER will make copies of reports and drawings referenced above available to any Bidder on request. These reports and drawings are not part of the Contract Documents, but the Technical Data contained therein upon whose accuracy Bidder is entitled to rely, as provided in the General Conditions, has been identified and established in the Supplementary Conditions. Bidder is responsible for any interpretation or conclusion Bidder draws from any Technical Data or any other data, interpretations, opinions, or information contained in such reports or shown or indicated in such drawings.

3. If the Supplementary Conditions do not identify Technical Data, the default definition of Technical Data set forth in Article 1 of the General Conditions will apply.

4. Geotechnical Reports: Appendix A of the Bidding Documents contains two Geotechnical Reports for the construction area. These two reports (Pioneer 2017 and Pioneer 2024) describe certain select subsurface conditions that are anticipated to be encountered by Contractor within the construction area. The geotechnical reports are integral to the Contract Documents.

   The subsurface conditions described in the reports are intended to reduce uncertainty and the degree of contingency in submitted Bids. However, Bidders are not limited to rely solely on the geotechnical reports. Bids should be based on a comprehensive approach that includes an independent review and analysis of the Report, all other Contract Documents, Technical Data, other available information, and observable surface conditions if bidders are not satisfied with the information provided. Not all potential subsurface conditions are identified herein.

   Nothing contained within the geotechnical reports is intended to relieve Bidders of the responsibility to make their own determinations regarding construction costs, bidding strategies, and Bid prices, nor of the responsibility to select and be responsible for the means, methods, techniques, sequences, and procedures of construction, and for safety precautions and programs incident thereto.

B. Underground Facilities: Information and data shown or indicated in the Bidding Documents with respect to existing Underground Facilities within or contiguous to the Site are set forth in the Contract Documents and are based upon information and data furnished to OWNER and Engineer by OWNERs of such Underground Facilities, including OWNER, or others.

C. Adequacy of Data: Provisions concerning responsibilities for the adequacy of data furnished to prospective Bidders with respect to subsurface conditions, other physical conditions, and Underground Facilities, and possible changes in the Bidding Documents

due to differing or unanticipated subsurface or physical conditions appear in Paragraphs 5.03, 5.04, and 5.05 of the General Conditions. Provisions concerning responsibilities for the adequacy of data furnished to prospective Bidders with respect to a Hazardous Environmental Condition at the Site, if any, and possible changes in the Contract Documents due to any Hazardous Environmental Condition uncovered or revealed at the Site which was not shown or indicated in the Drawings or Specifications or identified in the Contract Documents to be within the scope of the Work, appear in Paragraph 5.06 of the General Conditions.

4.03 SITE VISIT AND TESTING BY BIDDERS

A. Bidder shall conduct the required Site visit during normal working hours, and shall not disturb any ongoing operations at the Site.

1. If Bidder wishes to schedule an appointment to conduct Bidders site visit outside of the Pre-Bid Conference, please contact Jason Duffin – Compost Facility Supervisor, 406-552-6619 to schedule an appointment. The Engineer makes no guarantees as to the availability of the OWNER to accommodate Bidder's desired appointment times.

B. Bidder is not *required* to conduct any subsurface testing, or exhaustive investigations of Site conditions.

C. On request, and to the extent OWNER has control over the Site, and schedule permitting, the OWNER will provide Bidder access to the Site to conduct such additional examinations, investigations, explorations, tests, and studies as Bidder deems necessary for preparing and submitting an informed Bid. OWNER will not have any obligation to grant such access if doing so is not practical because of existing operations, security or safety concerns, or restraints on OWNER's authority regarding the Site.

D. Bidder shall comply with all applicable Laws and Regulations regarding excavation and location of utilities, obtain all permits, and comply with all terms and conditions established by OWNER or by property OWNERs or other entities controlling the Site with respect to schedule, access, existing operations, security, liability insurance, and applicable safety programs.

E. Bidder shall fill all holes and clean up and restore the Site to its former condition upon completion of such explorations, investigations, tests, and studies.

4.04 OTHER WORK AT THE SITE

A. Reference is made to Article 8 of the Supplementary Conditions for the identification of the general nature of other work of which OWNER is aware (if any) that is to be performed at the Site by OWNER or others (such as utilities and other prime contractors) and relates to the Work contemplated by these Bidding Documents. If OWNER is party to a written contract for such other work, then on request, OWNER will provide to each Bidder access to examine such contracts (other than portions thereof related to price and other confidential matters), if any.

B. Paragraph 9.12.B of the General Conditions indicates that if an OWNER safety program exists, it will be provided to and complied with by the CONTRACTOR.

ARTICLE 5 - BIDDER'S REPRESENTATIONS

5.01 It is the responsibility of each Bidder before submitting a Bid to:

A. become adept with the bidding process (VirtuBid) through QuestCDN to the point where the bidder is capable of submitting a responsive, responsible bid;

B. examine and carefully study the Bidding Documents, and any data and reference items identified in the Bidding Documents;

C. visit the Site, conduct a thorough, alert visual examination of the Site and adjacent areas, and become familiar with and satisfy itself as to the general, local, and Site conditions that may affect cost, progress, and performance of the Work;

D. become familiar with and satisfy itself as to all Laws and Regulations that may affect cost, progress, and performance of the Work;

E. carefully study all: (1) reports of explorations and tests of subsurface conditions at or adjacent to the Site and all drawings of physical conditions relating to existing surface or subsurface structures at the Site that have been identified in the Supplementary Conditions or Appendices, especially with respect to Technical Data in such reports and drawings, and (2) reports and drawings relating to Hazardous Environmental Conditions, if any, at or adjacent to the Site that have been identified in the Supplementary Conditions, especially with respect to Technical Data in such reports and drawings;

F. consider the information known to Bidder itself; information commonly known to contractors doing business in the locality of the Site; information and observations obtained from visits to the Site; the Bidding Documents; and the Site-related reports and drawings identified in the Bidding Documents, with respect to the effect of such information, observations, and documents on (1) the cost, progress, and performance of the Work; (2) the means, methods, techniques, sequences, and procedures of construction to be employed by Bidder; and (3) Bidder's safety precautions and programs;

G. agree, based on the information and observations referred to in the preceding paragraph, that at the time of submitting its Bid no further examinations, investigations, explorations, tests, studies, or data are necessary for the determination of its Bid for performance of the Work at the price bid and within the times required, and in accordance with the other terms and conditions of the Bidding Documents;

H. become aware of the general nature of the work to be performed by OWNER and others at the Site that relates to the Work as indicated in the Bidding Documents;

I. promptly give Engineer written notice of all conflicts, errors, ambiguities, or discrepancies that Bidder discovers in the Bidding Documents and confirm that the written resolution thereof by Engineer is acceptable to Bidder;

J. determine that the Bidding Documents are generally sufficient to indicate and convey understanding of all terms and conditions for the performance and furnishing of the Work; and

K. agree that the submission of a Bid will constitute an incontrovertible representation by Bidder that Bidder has complied with every requirement of this Article, that without

exception the Bid and all prices in the Bid are premised upon performing and furnishing the Work required by the Bidding Documents.

ARTICLE 6 - PRE-BID CONFERENCE

6.01 A pre-bid conference will be held at the time and location stated in the Invitation to Bid. Representatives of OWNER and Engineer will be present to discuss the Project. Bidders are **required** to have at least one representative attend and participate in the conference IN PERSON. Engineer will transmit to all prospective Bidders of record such Addenda as Engineer considers necessary in response to questions arising at the conference. Oral statements may not be relied upon and will not be binding or legally effective.

ARTICLE 7 - INTERPRETATIONS AND ADDENDA

7.01 All Addenda will be issued through the QuestCDN bidding site using the project number **9481350**.

7.02 All questions about the meaning or intent of the Bidding Documents are to be submitted to Engineer in writing. Interpretations or clarifications considered necessary by Engineer in response to such questions will be issued by Addenda delivered to all parties recorded as having received the Bidding Documents. Questions received less than four days prior to the date for opening of Bids may not be answered. Only questions answered by Addenda will be binding. Oral and other interpretations or clarifications will be without legal effect.

7.03 Addenda may be issued to clarify, correct, supplement, or change the Bidding Documents. Bidder shall acknowledge Addenda in their respective VirtuBid submittal through QuestCDN.

ARTICLE 8 - BID SECURITY

8.01 A Bid must be accompanied by Bid security made payable to OWNER in an amount of ten-percent (10%) of Bidder's maximum Bid price (determined by adding the base bid and all alternates) supplied on the Bid Bond form posted on QuestCDN (Project reference number: **9481350**) under "Bid Requirements") issued by a surety meeting the requirements of Paragraphs 6.01 and 6.02 of the General Conditions.

8.02 The Bid security of the apparent Successful Bidder will be retained until OWNER awards the contract to such Bidder, and such Bidder has executed the Contract Documents, furnished the required contract security, and met the other conditions of the Notice of Award, whereupon the Bid security will be released. If the Successful Bidder fails to execute and deliver the Contract Documents and furnish the required contract security within 15 days after the Notice of Award, OWNER may consider Bidder to be in default, annul the Notice of Award, and the Bid security of that Bidder will be forfeited. Such forfeiture shall be OWNER's exclusive remedy if Bidder defaults.

8.03 The Bid security of other Bidders that OWNER believes to have a reasonable chance of receiving the award may be retained by OWNER until the earlier of seven days after the Effective Date of the Contract or 61 days after the Bid opening, whereupon Bid security

furnished by such Bidders will be released.

8.04 Bid security of other Bidders that OWNER believes do not have a reasonable chance of receiving the award will be released within seven days after the Bid opening.

8.05 Attorneys-in-fact who sign Bid Bonds must file with the Bid Bond a certified and effective, dated copy of their power of attorney.

ARTICLE 9 - CONTRACT TIMES

9.01 The number of days within which, or the dates by which, Milestones are to be achieved and the Work is to be substantially completed and ready for final payment are set forth in the Agreement.

ARTICLE 10 - LIQUIDATED DAMAGES

10.01 Provisions for liquidated damages, if any, for failure to timely attain a Milestone, Substantial Completion, or completion of the Work in readiness for final payment, are set forth in the Agreement.

ARTICLE 11 - SUBSTITUTE AND "OR-EQUAL" ITEMS

11.01 The Contract for the Work, as awarded, will be on the basis of materials and equipment specified or described in the Bidding Documents, and those "or-equal" or substitute or materials and equipment subsequently approved by Engineer prior to the submittal of Bids and identified by Addendum. No item of material or equipment will be considered by Engineer as an "or-equal" or substitute unless written request for approval has been submitted by Bidder and has been received by Engineer at least 15 days prior to the date for receipt of Bids in the case of a proposed substitute. Each such request shall comply with the requirements of Paragraphs 7.04 and 7.05 of the General Conditions. The burden of proof of the merit of the proposed item is upon Bidder. Engineer's decision of approval or disapproval of a proposed item will be final. If Engineer approves any such proposed item, such approval will be set forth in an Addendum issued to all prospective Bidders. Bidders shall not rely upon approvals made in any other manner. Substitutes and "or-equal" materials and equipment may be proposed by Contractor in accordance with Paragraphs 7.4 and 7.5 of the General Conditions after the Effective Date of the Contract.

11.02 All prices that Bidder sets forth in its Bid shall be based on the presumption that the Contractor will furnish the materials and equipment specified or described in the Bidding Documents, as supplemented by Addenda. Any assumptions regarding the possibility of post-Bid approvals of "or-equal" or substitution requests are made at Bidder's sole risk.

11.03 If an award is made, Contractor shall be allowed to submit proposed substitutes and "or-equals' in accordance with the General Conditions.

11.04 Whether explicitly written or not explicitly written, "OR EQUAL" is implicitly listed as an "Approved Manufacturer" for any and all manufacturers listed in any and all specification sections or included herein or added by addendum or construction drawings, either included or added by addendum.

ARTICLE 12 - SUBCONTRACTORS, SUPPLIERS, AND OTHERS

12.01 Upon request, the apparent Low Bidder, and any other Bidder so requested, shall within five days after written request (e-mail being adequate), submit to OWNER a list of the Subcontractors or Suppliers proposed for the following portions of the Work:

A. Mechanical Sub-Contractor(s)

B. Electrical Sub-Contractors(s)

C. Structural Concrete Sub-Contractor(s)

D. Other Major Sub-Contractor(s) requested

1. If requested by OWNER, Such list shall be accompanied by an experience statement with pertinent information regarding similar projects and other evidence of qualification for each such Subcontractor, Supplier, or other individual or entity. If OWNER or Engineer, after due investigation, has reasonable objection to any proposed Subcontractor, Supplier, individual, or entity, OWNER may, before the Notice of Award is given, request apparent Successful Bidder to submit an acceptable substitute, in which case apparent Successful Bidder shall submit a substitute, Bidder's Bid price will be increased (or decreased) by the difference in cost occasioned by such substitution, and OWNER may consider such price adjustment in evaluating Bids and making the Contract award.

12.02 Contractor shall not be required to employ any Subcontractor, Supplier, individual, or entity against whom Contractor has reasonable objection.

12.03 The Contractor shall not award work to Subcontractor(s) in excess of the limits stated in SC 7.6.A

ARTICLE 13 - PREPARATION OF BID

13.01 The Bid Form *Sample* is included with the Bidding Documents under Section 00 41 00, however, the Bid must be submitted in electronic format on the VirtuBid form provided within the QuestCDN project bid site. *No paper bids will be accepted*.

A. All blanks on the VirtuBid worksheet form shall be completed as per Quest CDN protocols/procedures and Bid Form electronically signed by the Bidder's responsible representative. A Bid price shall be indicated for each section, Bid item, alternate, adjustment unit price item, and unit price item listed therein.

B. If the Bid Form expressly indicates that submitting pricing on a specific alternate item is optional, and Bidder elects to not furnish pricing for such optional alternate item, then Bidder may enter the words "No Bid" or "Not Applicable."

C. Any modifications of or deviations from the electronic bid form may be considered as sufficient cause for rejection.

13.02 A Bid by a corporation shall be executed in the corporate name by a corporate officer (whose title must appear under the signature), accompanied by evidence of authority to sign. The corporate seal shall be affixed an attested by the corporate secretary or an

assistant corporate secretary. The corporate address and state of incorporation shall be shown.

13.03 A Bid by a partnership shall be executed in the partnership name and signed by a partner (whose title must appear under the signature), accompanied by evidence of authority to sign. The official address of the partnership shall be shown.

13.04 A Bid by a limited liability company shall be executed in the name of the firm by a member or other authorized person and accompanied by evidence of authority to sign. The state of formation of the firm and the official address of the firm shall be shown.

13.05 A Bid by an individual shall show the Bidder's name and official address.

13.06 A Bid by a joint venture shall be executed by an authorized representative of each joint venturer in the manner indicated on the Bid Form. The official address of the joint venture shall be shown.

13.07 The VirtuBid submittal shall include an acknowledgment of receipt of all Addenda as a pre-requisite for QuestCDN to accept the bid.

13.08 The Bid shall contain evidence of Bidder's authority and qualification to do business in the state where the Project is located, or Bidder shall covenant in writing to obtain such authority and qualification prior to award of the Contract and attach such covenant to the Bid. Bidder's state contractor license number, if any, shall also be shown on the Bid Form.

A. Title 39, Chapter 9, Parts 1 and 2 MCA stipulate contractor registration requirements for the State of Montana. Pursuant to 39-9-201 MCA, each construction contractor must be registered with the Montana Department of Labor and Industry. In accordance with 39-9-201 MCA, "construction contractor" means a person, firm, or corporation that, in the pursuit of an independent business, offers to undertake, undertakes, or submits a bid for construction.

B. No bid shall be considered unless Bidder has supplied a valid Montana Contractors Registration Number through QuestCDN.

C. Registration forms and additional information may be obtained by contacting the Montana Department of Labor and Industry, 1805 Prospect Ave., P.O. Box 8011, Helena, MT 59604- 8011, or by calling 406-444-7734.

ARTICLE 14 - BASIS OF BID

14.01 BASE BID

A. Bidders shall submit their bid electronically (through VirtuBid) on a unit price and/or lump sum basis for the base Bid and any Alternates as provided for in the Bid Form. The cumulative amount on the Bid Form and the Bidders Qualification materials will be utilized to determine the lowest responsive and responsible bidder.

B. The Agreement as executed will contain the Substantial Completion time and readiness for final payment time. The Contractor will be assessed liquidated damages at the rate stated in the Agreement for failure to attain Substantial Completion within that time.

14.02 UNIT PRICE

A. The total of all estimated prices will be determined as the sum of the products of the estimated quantity of each item and the unit price Bid for the item. The final quantities and Contract Price will be determined in accordance with Article 13 of the General Conditions – Cost of the Work; Allowances; Unit Price Work.

B. Submittal of bids via QuestCDN's VirtuBid feature automatically performs the arithmetic for calculating bid line item subtotals and total bid amount. By submitting a bid, Bidders acknowledge that they will honor the values they have inserted in the electronic bid worksheet in performance of the Work.

ARTICLE 15 - SUBMITTAL OF BID

15.01 Bids will only be received and accepted via the VirtuBid online electronic bid service through QuestCDN

15.02 A complete Bid shall be submitted no later than the date and time prescribed and at the place indicated in the advertisement or invitation to bid, and shall be plainly identified and marked with the project title, "**City of Missoula – Garden City Compost Facility Improvements Project, 2025**" plus the name and address of Bidder, accompanied by the Bid security and other required documents. To be considered complete, the submitted bid must include the Bid Form, Bid Security and all other required attachments outlined in the Bidder's Checklist found in Section 00 43 93 for reference.

15.03 Any irregularities or deviations from the above stated directions, including failure to acknowledge any or all addenda, failure to include any or all of the required Bidder Qualifications, or any and all other irregularities and informalities will be noted at the time of Bid Opening. A judgement on the Bidders Response or Responsibility will be made at the time of Bid Opening, and, contingent upon said judgement, the Bid will either be read aloud or judged unresponsive and not read. Any judgement as to the question of a Bidder's Response or Responsibility will be subject to further interpretation which may result, without undue justification, in a Bidder's Bid being ruled disqualified after the time of Bid Opening. Bids deemed unresponsive at the time of Bid Opening are to be considered disqualified this ruling will be FINAL.

15.04 A Bid shall be received no later than the date and time prescribed in the Invitation to Bid and only through QuestCDN as described herein. Bids will not be accepted via mail or other delivery system.

ARTICLE 16 - MODIFICATION AND WITHDRAWAL OF BID

16.01 A Bid may be withdrawn by an appropriate document duly executed in the same manner that a Bid must be executed and delivered to the place where Bids are to be submitted prior to the date and time for the opening of Bids. Upon receipt of such notice, the unopened Bid will be returned to the Bidder.

16.02 If within 24 hours after Bids are opened any Bidder files a duly signed written notice with OWNER and promptly thereafter demonstrates to the reasonable satisfaction of OWNER

that there was a material and substantial mistake in the preparation of its Bid, that Bidder may withdraw its Bid, and the Bid security will be returned. Thereafter, if the Work is rebid, that Bidder will be disqualified from further bidding on the Work.

ARTICLE 17 - OPENING OF BIDS

17.01 The City of Missoula (OWNER) will receive and accept bids only through QuestCDN.com via their electronic VirtuBid™ online bid service. A *virtual* bid opening will be held at the day and time of the bid closing utilizing the OWNER's **Teams** conferencing portal. ***Official plan holders will receive a Teams link to attend the virtual bid opening.***

ARTICLE 18 - BIDS TO REMAIN SUBJECT TO ACCEPTANCE

18.01 All Bids will remain subject to acceptance for the period of time stated in the Bid Form, but OWNER may, in its sole discretion, release any Bid and return the Bid security prior to the end of this period.

ARTICLE 19 - EVALUATION OF BIDS AND AWARD OF CONTRACT

19.01 OWNER reserves the right to reject any or all Bids, including without limitation, nonconforming, nonresponsive, unbalanced, or conditional Bids. OWNER will reject the Bid of any Bidder that OWNER finds, after reasonable inquiry and evaluation, to not be responsible. If Bidder purports to add terms or conditions to its Bid, takes exception to any provision of the Bidding Documents, or attempts to alter the contents of the Contract Documents for purposes of the Bid, then the OWNER will reject the Bid as nonresponsive; provided that OWNER also reserves the right to waive all minor informalities not involving price, time, or changes in the Work.

19.02 If OWNER awards the contract for the Work, such award shall be to the responsible Bidder submitting the lowest responsive Bid.

19.03 EVALUATION OF BIDS

A. In evaluating Bids, OWNER will consider whether or not the Bids comply with the prescribed requirements, and such alternates, unit prices, and other data, as may be requested in the Bid Form or prior to the Notice of Award.

B. In the comparison of Bids, after the determination of the lowest base bid and alternates (if applicable) will be applied in the same order of priority as listed in the Bid Form. To determine the Bid prices for purposes of comparison, OWNER shall announce to all bidders a "Base Bid plus alternates" budget after receiving all Bids, but prior to opening them. For comparison purposes alternates will be accepted, following the order of priority established in the Bid Form, until doing so would cause the budget to be exceeded. After determination of the Successful Bidder based on this comparative process and on the responsiveness, responsibility, and other factors set forth in these Instructions, the award may be made to said Successful Bidder on its base Bid and any combination of its additive alternate Bids for which OWNER determines funds will be available at the time of award.

19.04 In evaluating whether a Bidder is responsible, OWNER will consider the qualifications of the Bidder and may consider the qualifications and experience of Subcontractors and Suppliers proposed for those portions of the Work for which the identity of Subcontractors and Suppliers must be submitted as provided in the Bidding Documents.

19.05 OWNER may conduct such investigations as OWNER deems necessary to establish the responsibility, qualifications, and financial ability of Bidders and any proposed Subcontractors or Suppliers.

19.06 If the Contract is to be awarded, OWNER will award the Contract to the responsible Bidder whose Bid is in the best interests of the Project. Consideration factors will include conformance with all material terms and conditions of the Contract Documents, Bid price, and other appropriate factors.

19.07 If the Contract is to be awarded, OWNER will give the Successful Bidder a Notice of Award within the time the Bid is to remain open as stated in the Bid form.

19.08 The OWNER reserves the right to accept or reject the Bids, or portions of Bids if denoted in the Bid as separate schedules, and to award more than one Bid or schedule for the same Bid if any of the aforementioned combination of Bids or schedules will be in the best interest of the OWNER.

19.09 The OWNER reserves the right to cancel the award of any Agreement at any time before the complete execution of said Agreement by all parties without any liability against the OWNER.

19.10 If, at the time this Contract is to be awarded, the total of the lowest acceptable Bid Proposal exceeds the funds then estimated by the Owner as available, the Owner may reject all Bid Proposals or take such other action as best serves the Owner's interests.

ARTICLE 20 - BONDS AND INSURANCE

20.01 Article 6 of the General Conditions, as may be modified by the Supplementary Conditions, sets forth OWNER's requirements as to performance and payment bonds and insurance. When the Successful Bidder delivers the Agreement (executed by Successful Bidder) to OWNER, it shall be accompanied by required bonds and insurance documentation.

ARTICLE 21 - SIGNING OF AGREEMENT

21.01 When OWNER issues a Notice of Award to the Successful Bidder, it shall be accompanied by the unexecuted counterparts of the Agreement along with the other Contract Documents as identified in the Agreement. Within 15 days thereafter, Successful Bidder shall execute and deliver the required number of counterparts of the Agreement (and any bonds and insurance documentation required to be delivered by the Contract Documents) to OWNER. Within ten days thereafter, OWNER shall deliver one fully executed counterpart of the Agreement to Successful Bidder, together with printed and electronic copies of the Contract Documents as stated in Paragraph 2.2 of the General Conditions.

ARTICLE 22 - SALES AND USE TAXES

22.01 OWNER is exempt from taxation as legislated by Title 15 of Montana Code Annotated (15-6-201, MCA) & (15-31-102, MCA). OWNER is exempt from Montana state sales and use taxes on materials and equipment to be incorporated in the Work.

22.02 All applicable laws, ordinances, and the rules and regulations of authorities having jurisdiction over construction of the project shall apply to the Contract throughout. State laws and ordinances which the Contractor must comply with include, but are not limited to, those involving workmen's compensation insurance, contractor registration, and gross receipts tax.

ARTICLE 23 - SAFETY REQUIREMENTS

23.01 If the contract price is in excess of $100,000, provisions of the Contract Work Hours and Safety Standards Act at 29 CFR 5.5(b) apply.

ARTICLE 24 - MONTANA PUBLIC WORKS STANDARD SPECIFICATIONS

24.01 The Montana Public Works Standard Specifications are hereby referenced in the Project Documents and represent the ***minimum*** standards by which the Work shall be conducted.

ARTICLE 25 - FUNDING AGENCY SPECIAL PROVISIONS FOR MONTANA PUBLIC FACILITY PROJECTS

25.01 This project is being funded with funds from the following public facility funding programs or agencies:

A. American Rescue Plan Act (ARPA) Minimum Allocation & Competitive Grants

B. Water Pollution Control State Revolving Fund Loan Program (SRF)

25.02 Bidder's attention is direction to Section 00 90 00 – Funding Agency Requirements of these contract documents. The successful Bidder shall comply with all applicable articles therein, including but not limited to, the following Instructions to Bidders;

ARTICLE 26 - EQUAL EMPLOYMENT OPPORTUNITY

26.01 BIDDER'S attention is directed to ARTICLE 1.5.1 [Equal Employment Opportunity and Affirmative Action Requirements] of Section 00 90 00, the requirement for ensuring that employees and applicants for employment are not discriminated against because of their race, color, religion, national origin, sex, marital status, age, or political ideas. Bidders on this work will be required to comply with the President's Executive Orders No. 11246 as amended, 11458, 11518, and 11625.

ARTICLE 27 - DISADVANTAGE BUSINESS ENTERPRISES

27.01 DBE solicitation requirements are located in ARTICLE 1.5.2 [Guidance for Participation By Disadvantaged Business (DBE) Enterprises In United States Environmental Protection Agency Programs of 40 CFR 33] of Section 00 90 00. The DBE quote request form is available to BIDDERS on the QuestCDN bid posting for project **9481350** within the VirtuBid form and at https://app.mdt.mt.gov/dbeqt/. The BIDDER should fill out and

submit the quote request form as early in the bidding period as possible to allow sufficient time for qualified DBE firms to respond. A DBE must be certified as such by a state or federal agency (e.g., the Small Business Administration, the Department of Transportation, or EPA) or by a state, local, or independent private organization, provided their criteria match those under section 8(a) (5) and (6) of the Small Business Act and Small Business Administration's 8(a) Business Development Program Regulations. Self-certification of DBEs is not allowed. Inadequate DBE solicitation efforts by the BIDDER may be grounds for the MDEQ State Revolving Fund program to withhold funds for the project and withhold authorization to award the construction contract. In accordance with Section 00 90 00 Article 1.5.2, failure to submit evidence showing a "good faith effort" may cause the bid to be rejected as non-responsive.

ARTICLE 28 - DEBARMENT CERTIFICATION

28.01 BIDDER'S attention is directed to ARTICLE 1.5.3 [Certification Regarding Debarment, Suspension and Other Responsibility Matters] of Section 00 90 00 with respect to Certification Regarding Debarment. Federal funding is being utilized on this project and the successful bidder must provide the debarment certification statement at the time of bid opening with the bid and other forms required. The Debarment Certification form is available via QuestCDN's VirtuBid and must be submitted with the Bidder's bid in order to be considered responsive and responsible.

ARTICLE 29 - COMPLIANCE WITH WAGE RATE REQUIREMENTS

29.01 BIDDER'S attention is directed to ARTICLE 1.5.7 [Wage Determination] of Section 00 90 00 with respect to wage rates. Under all Schedules of this Contract with the OWNER, the Contractor and all subcontractors shall pay for all labor employed at no less than the minimum standard prevailing rate of wages for each classification, which shall be the higher of either the Montana Prevailing Wage Rates or the Federal Davis-Bacon Prevailing Wage Rates, as most recently appended at the time of bid opening.

ARTICLE 30 - BUILD AMERICA, BUY AMERICA (BABA) REQUIREMENTS

30.01 BIDDER'S attention is directed to ARTICLE 1.5.10 [Build America, Buy America Requirements] of Section 00900. All of the iron, steel, manufactured products, and construction materials used in the project must be produced in the United States.

A. For iron and steel, all manufacturing processes, from the initial melting stage through the application of coatings, must occur in the United States. This includes products made primarily of iron or steel such as lined or unlined pipes and fittings, manhole covers and other municipal castings, hydrants, tanks, flanges, pipe clamps and restraints, valves, structural steel, and reinforced precast concrete and construction materials made primarily of iron or steel such as wire, cables, rebar, framing, joists, decking, grating, railings, stairs, and fencing.

B. The term "manufactured product" means the manufactured product was manufactured in the United States, and the cost of the components of the manufactured product that are mined, produced, or manufactured in the United States is greater than 55 percent of the total cost of all components of the manufactured product. This includes (but is not limited

to) pumps, motors, drives, mixers, motorized screens, controls and switches, membrane bioreactor systems, membrane filtration systems, clarifiers, disinfection systems, HVAC systems, and skids that contain multiple components.

C. For construction materials, all manufacturing processes for the construction material occurred in the United States. This includes an article, material, or supply that is or consists primarily of non-ferrous metals (construction materials made of ferrous metals are covered under iron and steel), plastic- and polymer-based products including PVC, composite building materials, and polymers used in fiber optic cables, glass including optic glass, lumber, and drywall.

D. BABA CERTIFICATION FORMS - The General Contractor shall provide, to the Owner, the Manufacturer/Supplier Certification forms (from Exhibit E of Section 00900) either prior to product purchase or when the products are delivered. The General Contractor(s) shall also provide the Owner with the General Contractor Certification form(s) (from Exhibit E of Section 00900) upon project completion. General Contractor(s) shall ensure that all subcontractors and manufacturers/suppliers on the project have met the BABA requirements.

E. BABA WAIVERS - A waiver from the Build America, Buy America requirements may be issued by the head of a Federal agency if it is found that: 1) applying the domestic content procurement preference would be inconsistent with the public interest (a "public interest waiver"); 2) types of iron, steel, manufactured products, or construction materials are not produced in the United States in sufficient and reasonably available quantities or of a satisfactory quality (a "nonavailability waiver"); or 3) inclusion of iron, steel, manufactured products, or construction materials produced in the United States will increase the cost of the overall project by more than 25 percent (an "unreasonable cost waiver"). Waiver requests must be submitted for review to the funding Agency.

The EPA has issued the following national waivers: 1) Adjustment Period (September 2, 2022); 2) Small Project (September 26, 2022); 3) De Minimis (October 21, 2022).

ARTICLE 31 - PAYMENTS AND BIDDER'S SCHEDULE OF VALUES

31.01 Payment for all work performed under this Agreement will be made by the OWNER within the time period specified in and in accordance with the procedures outlined in the General Conditions. When the Work extends beyond thirty (30) days, progress payments will be made monthly for any work accomplished during the preceding month, but subject to retainage as specified Agreement.

31.02 For the sole purpose of facilitating monthly progress payments, the BIDDER/CONTRACTOR shall provide a detailed Schedule of Values (SOV), representing an accurate breakdown of total lump sum bids into individual elements for the purposes of measuring project progress and determining amount due for each pay period. Each unit process (compost, biofilter, curing, containment bins, runoff collection/conveyance, Control Building, etc.) shall be broken down into elements (civil, structural, mechanical, electrical, etc.) by the CONTRACTOR and *the SOV shall be submitted to the OWNER/ENGINEER at the Pre-Construction Conference*. The price breakdown shall be fairly apportioned to the various parts of the Work and shall meet with the ENGINEER's approval. If so requested by the ENGINEER, the

CONTRACTOR shall substantiate any price or prices with additional detail price breakdown or other information as requested by the ENGINEER.

ARTICLE 32 - MONTANA EMPLOYMENT PREFERENCE

32.01 Montana Code Annotated (MCA) statute Sections 18-2-403 and 18-2-409 require contrators to give preference to the employment of bona fide Montana Residents in the performance of the work on this project. Contractors are expected to employ bona fide Montana residents for at least 50% of its work force or, if due to a lack of qualified personnel, the Contractor must employ at least the percentage that the Commissioner of Labor and Industry believes possible for the project area.

END OF SECTION 00 21 13

SECTION 00 41 00

BID FORM
MISSOULA – GARDEN CITY COMPOST FACILITY
IMPROVEMENTS PROJECT 2024

ARTICLE 1 – BID RECIPIENT

1.01 This Bid ***can only be electronically submitted through QuestCDN*** to:

City of Missoula – Logan McInnis, P.E., Deputy Director of Utilities
Missoula City Hall

See Section 00 21 13 – Instructions to Bidders, for information regarding acquisition/review of bidding documents and submitting an official bid through QuestCDN.

1.02 The undersigned Bidder proposes and agrees, if the electronic Bid is accepted, to enter into an Agreement with Owner in the form included in the Bidding Documents to perform all Work as specified or indicated in the Bidding Documents for the prices and within the times indicated in this Bid and in accordance with the other terms and conditions of the Bidding Documents.

ARTICLE 2 – BIDDER'S ACKNOWLEDGEMENTS

2.01 Bidder accepts all of the terms and conditions of the Instructions to Bidders, including without limitation those dealing with the disposition of Bid security. This Bid will remain subject to acceptance for 60 days after the Bid opening, or for such longer period of time that Bidder may agree to in writing upon request of Owner.

2.02 Bidder acknowledges the provisions of the Agreement as to the assignment of the procurement contract for procurement of goods and special services for the **City of Missoula – Garden City Compost Facility Improvements Project, 2025**

ARTICLE 3 – BIDDER'S REPRESENTATIONS

3.01 In submitting this Bid, Bidder represents that:

A. Bidder has examined and carefully studied the Bidding Documents, and any data and reference items identified in the Bidding Documents, and hereby acknowledges receipt of the following Addenda:

Addendum No.	Addendum, Date
_____	_____
_____	_____
_____	_____
_____	_____

B. Bidder has visited the Site, conducted a thorough, alert visual examination of the Site and adjacent areas, and become familiar with and satisfied itself as to the general, local, and Site conditions that may affect cost, progress, and performance of the Work.

C. Bidder is familiar with and has satisfied itself as to all Laws and Regulations that may affect cost, progress, and performance of the Work.

D. Bidder has carefully studied all: (1) reports of explorations and tests of subsurface conditions at or adjacent to the Site and all drawings of physical conditions relating to existing surface or subsurface structures at the Site that have been identified in the Supplementary Conditions, especially with respect to Technical Data in such reports and drawings, and (2) reports and drawings relating to Hazardous Environmental Conditions, if any, at or adjacent to the Site that have been identified in the Supplementary Conditions, especially with respect to Technical Data in such reports and drawings.

E. Bidder has considered the information known to Bidder itself; information commonly known to contractors doing business in the locality of the Site; information and observations obtained from visits to the Site; the Bidding Documents; and any Site-related reports and drawings identified in the Bidding Documents, with respect to the effect of such information, observations, and documents on (1) the cost, progress, and performance of the Work; (2) the means, methods, techniques, sequences, and procedures of construction to be employed by Bidder; and (3) Bidder's safety precautions and programs.

F. Bidder agrees, based on the information and observations referred to in the preceding paragraph, that no further examinations, investigations, explorations, tests, studies, or data are necessary for the determination of this Bid for performance of the Work at the price bid and within the times required, and in accordance with the other terms and conditions of the Bidding Documents.

G. Bidder is aware of the general nature of work to be performed by Owner and others at the Site that relates to the Work as indicated in the Bidding Documents.

H. Bidder has given Engineer written notice of all conflicts, errors, ambiguities, or discrepancies that Bidder has discovered in the Bidding Documents, and confirms that the written resolution thereof by Engineer is acceptable to Bidder.

I. The Bidding Documents are generally sufficient to indicate and convey understanding of all terms and conditions for the performance and furnishing of the Work.

J. The submission of this Bid constitutes an incontrovertible representation by Bidder that Bidder has complied with every requirement of this Article, and that without exception the Bid and all prices in the Bid are premised upon performing and furnishing the Work required by the Bidding Documents.

ARTICLE 4 – BIDDER'S CERTIFICATION

4.01 Bidder certifies that:

A. This Bid is genuine and not made in the interest of or on behalf of any undisclosed individual or entity and is not submitted in conformity with any collusive agreement or rules of any group, association, organization, or corporation;

B. Bidder has not directly or indirectly induced or solicited any other Bidder to submit a false or sham Bid;

C. Bidder has not solicited or induced any individual or entity to refrain from bidding; and

D. Bidder has not engaged in corrupt, fraudulent, collusive, or coercive practices in competing

for the Contract. For the purposes of this Paragraph 4.01.D:

1. "corrupt practice" means the offering, giving, receiving, or soliciting of anything of value likely to influence the action of a public official in the bidding process;
2. "fraudulent practice" means an intentional misrepresentation of facts made (a) to influence the bidding process to the detriment of Owner, (b) to establish bid prices at artificial non-competitive levels, or (c) to deprive Owner of the benefits of free and open competition;
3. "collusive practice" means a scheme or arrangement between two or more Bidders, with or without the knowledge of Owner, a purpose of which is to establish bid prices at artificial, non-competitive levels; and
4. "coercive practice" means harming or threatening to harm, directly or indirectly, persons or their property to influence their participation in the bidding process or affect the e execution of the Contract.

ARTICLE 5 – BASIS OF BID

5.01 Bidder will complete the Work in accordance with the Contract Documents for the following price(s):

BID FORM - Garden City Compost Facility Improvements						
BASE BID - Schedule 1						
ITEM #	ITEM CODE	BID ITEM DESCRIPTION	UNITS	QUAN.	UNIT PRICE	LINE ITEM TOTAL
100	General	Mobilization/Bonding/Insurance	LS	1	$0.00	$0.00
102	General	Miscellaneous Work	$	100,000	$1.00	$100,000.00
104	Civil	Exploratory Excavation	Hr	120	$0.00	$0.00
106	Civil	Demolition/Salvage/Re-Locate Existing Infrastructure	LS	1	$0.00	$0.00
108	Civil	Excavate Unsuitable Material - Compost/Biofilter	CY	15,000	$0.00	$0.00
110	Civil	Import Engineered Fill (MPW 4" Minus) - Compost/Biofilter	CY	22,300	$0.00	$0.00
112	Civil	Dewatering	HP•day	500	$0.00	$0.00
114	Civil	Runoff Lift Station & Forcemain	LS	1	$0.00	$0.00
116	Civil	Runoff Catch Basins (3) & Gravity Sewer	LS	1	$0.00	$0.00
118	Civil	Condensate Sumps (4) & Gravity Piping	LS	1	$0.00	$0.00
120	Civil	Condensate Lift Station & Forcemain	LS	1	$0.00	$0.00
122	Civil	Irrigation Well, Pump, Piping, Controls, Irrigation Valves, Risers, Heads	LS	1	$0.00	$0.00
124	Control Building	Conex Control Building Complete	LS	1	$0.00	$0.00
126	Structural	Biosolids Bin Footings & Walls	LS	1	$0.00	$0.00
128	Structural	Biosolids Bin Flatwork	LS	1	$0.00	$0.00
130	Structural	Pre-Compost Bin Footings & Walls	LS	1	$0.00	$0.00
132	Structural	Pre-Compost Bin Flatwork	LS	1	$0.00	$0.00
134	Structural	Compost/Biofilters Footings & Walls	LS	1	$0.00	$0.00
136	Structural	Compost/Biofilters Flatwork	LS	1	$0.00	$0.00
138	Structural	Rumble Grate Trough	LS	1	$0.00	$0.00
140	Mechanical	Compost/Biofilters Aeration Piping, Fittings, Dampers/Valves	LS	1	$0.00	$0.00
142	Mechanical	Compost/Biofilter Blowers	LS	1	$0.00	$0.00
144	Electrical	Electrical Feeds: MSB-A; MSB-6; Control Building; Compost/Biofilter Blowers; Runoff Lift Station; Condensate Lift Station; Well; Generator	LS	1	$0.00	$0.00
146	Electrical	Switch Gear/Breakers/Disconnects	LS	1	$0.00	$0.00
148	Electrical	Relocate Existing Mixer Panels	LS	1	$0.00	$0.00
150	Electrical	Emergency Generator & ATS	LS	1	$0.00	$0.00

BASE BID - Schedule 1 (Continued)						
ITEM #	**ITEM CODE**	**BID ITEM DESCRIPTION**	**UNITS**	**QUAN.**	**UNIT PRICE**	**LINE ITEM TOTAL**
152	Electrical	Control Building Circuitry/Lighting	LS	1	$0.00	$0.00
154	HVAC	Control Building HVAC: (fans/louvers/split system)	LS	1	$0.00	$0.00
156	Controls	Compost Control System: primary devices; probes; modbus gateway; antennae; communications; control panels; drives; PC; hardware; HMI software; startup/training	LS	1	$0.00	$0.00
158	General	Project Sign	LS	1	$0.00	$0.00
Total Base Bid Price (in figures):			**$100,000.00**			
Total Bid Price (in words):			**_____dollars**			

BID ALTERNATE A - Schedule 2						
ITEM #	**ITEM CODE**	**BID ITEM DESCRIPTION**	**UNITS**	**QUAN.**	**UNIT PRICE**	**LINE ITEM TOTAL**
200	General	Mobilization/Bonding/Insurance	LS	1	$0.00	$0.00
202	Civil	Excavate Unsuitable Material - Curing Wall Footing & Equipment Pad	CY	990	$0.00	$0.00
204	Civil	Import Engineered Fill (MPW 4" Minus) - Curing Wall Footing & Equipment Pad	CY	3,300	$0.00	$0.00
206	Civil	Curing Back Push Wall Footing & Equipment Pad	LS	1	$0.00	$0.00
208	Civil	Curing EcoBlock Walls	LS	1	$0.00	$0.00
210	Civil	Curing Control Shed	LS	1	$0.00	$0.00
212	Mechanical	Curing Blowers, Aeration Piping, Fittings, Dampers	LS	1	$0.00	$0.00
214	Electrical	Electrical Feed - Curing	LS	1	$0.00	$0.00
216	Electrical	Control Panel, Circuitry & Lighting – Curing Shed	LS	1	$0.00	$0.00
Total Bid Alternate A Price (in figures):				**$0.00**		
Total Bid Alternate A Price (in words):				**_____ dollars**		

BID ALTERNATE B - Schedule 3						
ITEM #	**ITEM CODE**	**BID ITEM DESCRIPTION**	**UNITS**	**QUAN.**	**UNIT PRICE**	**LINE ITEM TOTAL**
300	General	Mobilization/Bonding/Insurance	LS	1	$0.00	$0.00
302	Civil	Excavate Unsuitable Material - Curing Interior Footprint	CY	1,520	$0.00	$0.00
304	Civil	Import Engineered Fill (MPW 4" Minus) - Curing Interior Footprint	CY	1,520	$0.00	$0.00
306	Civil	Excavate Unsuitable Material - Greenwaste Storage Area	CY	1,300	$0.00	$0.00
308	Civil	Import Engineered Fill (MPW 4" Minus) - Greenwaste Storage Area	CY	2,600	$0.00	$0.00
Total Bid Alternate B Price (in figures):				**$0.00**		
Total Bid Alternate B Price (in words):				**_____ dollars**		

ARTICLE 6 – TIME OF COMPLETION

6.01 Bidder agrees that the Work will be substantially complete and will be completed and ready for final payment in accordance with Paragraph 15.6 of the General Conditions on or before the dates or within the number of calendar days indicated in the Agreement.

6.02 Bidder accepts the provisions of the Agreement as to liquidated damages.

ARTICLE 7 – ATTACHMENTS TO THIS BID

7.01 The following documents are submitted with and made a condition of this Bid:

A. Required Bid security — See SECTION – 00 43 13;

B. List of Proposed Subcontractors — See Article 12 of SECTION – 00 21 13;

C. Evidence of authority to do business in the state of Montana; or a written covenant to obtain such license within the time for acceptance of Bids;

1. Montana Contractor's Registration Number:

D. Required Bidder Qualification Statement with supporting data

1. FORM C-451 (See SECTION – 00 45 13).

E. USEPA Certification Regarding Debarment, Suspension, and Other Responsibility Matters

F. DBE Subcontractor Solicitation Information

ARTICLE 8 – DEFINED TERMS

8.01 The terms used in this Bid with initial capital letters have the meanings stated in the Instructions to Bidders, the General Conditions, and the Supplementary Conditions.

ARTICLE 9 – BID SUBMITTAL

This Bid is SUBMITTED on_____, 2025

BY:

If Bidder is:

An Individual

Name (typed or printed):_____

By:_____

(*Individual's Signature*)

Doing business as:_____

_____

A Partnership

Partnership Name:_____

By:_____

_____

(*Signature of general partner – attach evidence of authority to sign)*

Name (typed or printed):_____

A Corporation

Corporation Name:_____

State of Incorporation:_____

Type (General Business, Profession, Service, Limited Liability):_____

By:_____

(*Signature – attach evidence of authority to sign)*

Name (typed or printed):_____

Title:_____

Attest:_____

(*Signature of Corporate Secretary)*

Date of Qualification to do business in Montana is_____/_____/_____.

A Joint Venture

Name of Joint Venture:_____

First Joint Venture Name:_____

By:_____

(*Signature of joint venture partner – attach evidence of authority to sign)*

Name (typed or printed):_____

Title:_____

Second Joint Venture Name:_____

By:_____

(*Signature of joint venture partner – attach evidence of authority to sign)*

Name (typed or printed):_____

Title:_____ (Each joint venturer must sign. The manner of signing for each individual, partnership, and corporation that is party to the venture should be in the manner indicated above.)

BIDDER'S BUSINESS ADDRESS & CONTACT INFORMATION:

Bidder's Business address: _____

Business Phone No._____

Business Fax No._____

Business E-Mail Address_____

State Contractor License No._____. (If applicable)

Employer's Tax ID No._____

ADDRESS FOR GIVING NOTICES:

Phone and e-mail address, and Address for receipt of *official communications* if different from Business address and contact information:

_____

_____

END OF SECTION 00 41 00

SECTION 00 43 13
BID BOND

BIDDER (Name and Address):

_____
_____
_____

SURETY (Name and Address of Principal Place of Business):

_____
_____
_____

OWNER (Name and Address):

City of Missoula
435 Ryman St.
Missoula, MT 59802

BID

BID DUE DATE: March 14, 2025
PROJECT:

As described in Project Documents, the Bid is for provision of General Construction Services for the City of Missoula – Garden City Compost Facility Improvements Project 2024 located at 1125 Clark Fork Lane, Missoula, MT 59808.

BOND

BOND NUMBER: _____
DATE (Not later than Bid due date): _____
PENAL SUM: _____ _____
(Words) (Figures)

IN WITNESS WHEREOF, Surety and Bidder, intending to be legally bound hereby, subject to the terms printed on the reverse side hereof, do each cause this Bid Bond to be duly executed on its behalf by its authorized officer, agent, or representative.

BIDDER

_____(Seal)
Bidder's Name and Corporate Seal

By: _____
Signature and Title

Attest: _____
Signature and Title

SURETY

_____(Seal)
Surety's Name and Corporate Seal

By: _____
Signature and Title
(Attach Power of Attorney)

Attest: _____
Signature and Title

Note: (1) Above addresses are to be used for giving required notice.
(2) Any singular reference to Bidder, Surety, OWNER or other party shall be considered plural where applicable.

1. Bidder and Surety, jointly and severally, bind themselves, their heirs, executors, administrators, successors and assigns to pay to OWNER upon default of Bidder any difference between the total amount of Bidder's Bid and the total amount of the Bid of the next lowest, responsible and responsive Bidder as determined by OWNER for the Work required by the Contract Documents, provided that:

1.1. If there is no such next lowest, responsible and responsive Bidder, and OWNER does not abandon the Project, then Bidder and Surety shall pay to OWNER the penal sum set forth on the face of this Bond, and

1.2. In no event shall Bidder's and Surety's obligation hereunder exceed the penal sum set forth on the face of this Bond.

2. Default of Bidder shall occur upon the failure of Bidder to deliver within the time required by the Bidding Documents (or any extension thereof agreed to in writing by OWNER) the executed Agreement required by the Bidding Documents and any performance and payment Bonds required by the Bidding Documents.

3. This obligation shall be null and void if:

3.1. OWNER accepts Bidder's Bid and Bidder delivers within the time required by the Bidding Documents (or any extension thereof agreed to in writing by OWNER) the executed Agreement required by the Bidding Documents and any performance and payment Bonds required by the Bidding Documents, or

3.2. All Bids are rejected by OWNER, or

3.3. OWNER fails to issue a Notice of Award to Bidder within the time specified in the Bidding Documents (or any extension thereof agreed to in writing by Bidder and, if applicable, consented to by Surety when required by paragraph 5 hereof).

4. Payment under this Bond will be due and payable upon default by Bidder and within 30 calendar days after receipt by Bidder and Surety of written notice of default from OWNER, which notice will be given with reasonable promptness, identifying this Bond and the Project and including a statement of the amount due.

5. Surety waives notice of and any and all defenses based on or arising out of any time extension to issue Notice of Award agreed to in writing by OWNER and Bidder, provided that the total time for issuing Notice of Award including extensions shall not in the aggregate exceed 120 days from Bid due date without Surety's written consent.

6. No suit or action shall be commenced under this Bond prior to 30 calendar days after the notice of default required in paragraph 4 above is received by Bidder and Surety and in no case later than one year after Bid due date.

7. Any suit or action under this Bond shall be commenced only in a court of competent jurisdiction located in the state in which the Project is located.

8. Notices required hereunder shall be in writing and sent to Bidder and Surety at their respective addresses shown on the face of this Bond. Such notices may be sent by personal delivery, commercial courier or by United States Registered or Certified Mail, return receipt requested, postage pre-paid, and shall be deemed to be effective upon receipt by the party concerned.

9. Surety shall cause to be attached to this Bond a current and effective Power or Attorney evidencing the authority of the officer, agent or representative who executed this Bond on behalf of Surety to execute, seal and deliver such Bond and bind the Surety thereby.

10. This Bond is intended to conform to all applicable statutory requirements. Any applicable requirement of any applicable statute that has been omitted from this Bond shall be deemed to be included herein as if set forth at length. If any provision of this Bond conflicts with any applicable statute, then the provision of said statute shall govern and the remainder of this Bond that is not in conflict therewith shall continue in full force and effect.

11. The term "Bid" as used herein includes a Bid, offer or proposal as applicable.

END OF SECTION 00 43 13

SECTION 00 43 93
BIDDERS CHECKLIST

Directions: The following items are to be included with Bidders' package received no later than **March 14, 2025, 2:00 p.m.** via QuestCDN. Bid opening to be held virtually via Microsoft Teams. The meeting link will be emailed to all official planholders one day prior to the bid opening. Bids accepted on behalf of:

City of Missoula
Logan McInnis, P.E. – Deputy Director of Utilities
435 Ryman St.
Missoula, MT 59802

Bid opening may be attended via Microsoft Teams at the link in 00 21 13 Instructions to Bidders

---

_____ Complete Bid Form (Section 00 41 00)

_____ Bid Bond (Section 00 43 13)

_____ Bidder Qualifications Form C-451 (Section 00 45 13)

_____ Funding Agency Forms (Section 00 90 00)

_____ Contractor's Registration

_____ Review Site Conditions

_____ DBE Subcontractor Solicitation Information

_____ SRF Certification Regarding Debarment, Suspension, and Other Responsibility Matters

SECTION 00 45 13
BIDDERS QUALIFICATIONS FORM C-451 (as AMENDED)

QUALIFICATIONS STATEMENT

THE INFORMATION SUPPLIED IN THIS DOCUMENT IS CONFIDENTIAL TO THE EXTENT PERMITTED BY LAWS AND REGULATIONS

1. **SUBMITTED BY:**

Official Name of Firm: _____

Address: _____

_____

_____

2. **SUBMITTED TO:** _____

3. **SUBMITTED FOR:** _____

Owner: City of Missoula

Project Name: Garden City Compost Facility Improvements

Project 2025

_____

_____

TYPE OF WORK: _____

_____

_____

4. **CONTRACTOR'S CONTACT INFORMATION**

Contact Person: _____

Title: _____

Phone: _____

Email: _____

5. AFFILIATED COMPANIES:

Name: _____

Address: _____

_____

_____

6. TYPE OF ORGANIZATION:

☐ SOLE PROPRIETORSHIP

Name of Owner: _____

Doing Business As: _____

Date of Organization: _____

☐ PARTNERSHIP

Date of Organization: _____

Type of Partnership: _____

Name of General Partner(s): _____

_____

_____

☐ CORPORATION

State of Organization: _____

Date of Organization: _____

Executive Officers:

- President: _____

- Vice President(s): _____

_____

_____

- Treasurer: _____

- Secretary: _____

☐ LIMITED LIABILITY COMPANY

State of Organization: _____

Date of Organization: _____

Members: _____

_____

_____

_____

☐ JOINT VENTURE

Sate of Organization: _____

Date of Organization: _____

Form of Organization: _____

Joint Venture Managing Partner

- Name: _____

- Address: _____

_____

_____

Joint Venture Managing Partner

- Name: _____

- Address: _____

_____

Joint Venture Managing Partner

- Name: _____

- Address: _____

_____

7. LICENSING

Jurisdiction: _____

Type of License: _____

License Number: _____

Jurisdiction: _____

Type of License: _____

License Number: _____

8. CERTIFICATIONS CERTIFIED BY:

Disadvantage Business Enterprise: _____

Minority Business Enterprise: _____

Woman Owned Enterprise: _____

Small Business Enterprise: _____

Other (_____): _____

9. BONDING INFORMATION

Bonding Company: _____

Address: _____

_____

Bonding Agent: _____

Address: _____

_____

_____

Contact Name: _____

Phone: _____

Aggregate Bonding Capacity: _____

Available Bonding Capacity as of date of this submittal: _____

10. FINANCIAL INFORMATION

Financial Institution: _____

Address: _____

_____

Account Manager: _____

Phone: _____

INCLUDE AS AN ATTACHMENT AN AUDITED BALANCE SHEET FOR EACH OF THE LAST 3 YEARS

11. CONSTRUCTION EXPERIENCE & PERFORMANCE:

A. Current Experience:

List on **Schedule A** all uncompleted projects currently under contract (If Joint Venture list each participant's projects separately).

B. Previous Experience:

List on **Schedule B** all projects completed within the last 5 Years (If Joint Venture list each participant's projects separately).

C. Has the BIDDER listed in Section 1 ever failed to complete a construction contract awarded to it?

☐ YES ☐ NO

If YES, attach as an Attachment, details including Project Owner's contact information.

D. Has any Corporate Officer, Partner, Joint Venture participant or Proprietor ever failed to complete a construction contract awarded to them in their name or when acting as a principal of another entity?

☐ YES ☐ NO

If YES, attach as an Attachment, details including Project Owner's contact information.

E. Are there any judgments, claims, disputes or litigation pending or outstanding involving the firm listed in Section 1 or any of its officers (or any of its partners if a partnership or any of the individual entities if a joint venture)?

☐ YES ☐ NO

If YES, attach as an Attachment, details including Project Owner's contact information.

F. Has the BIDDER ever defaulted on an awarded contract?

☐ YES ☐ NO

If YES, attach as an Attachment, details including Project Owner's contact information.

G. Is the BIDDER involved in any lawsuits or are any lawsuits pending at the present time?

☐ YES ☐ NO

If YES, attach as an Attachment, details including opposing litigant's contact information.

H. Name of the BIDDER's proposed resident project superintendent:

_____

Attach the proposed resident project Superintendent's resume' along with a list of all projects on which this individual has acted as Superintendent and contact information for each project Owner.

12. SAFETY PROGRAM:

Name of Contractor's Safety Officer:_____

Include the following as attachments:

Provide as an Attachment Contractor's (and Contractor's proposed Subcontractors and Suppliers furnishing or performing Work having a value in excess of 10 percent of the total amount of the Bid) OSHA No. 500- Log & Summary of Occupational Injuries & Illnesses for the past 5 years.

Provide as an Attachment Contractor's (and Contractor's proposed Subcontractors and

Suppliers furnishing or performing Work having a value in excess of 10 percent of the total amount of the Bid) list of all OSHA Citations & Notifications of Penalty (monetary or other) received within the last 5 years (indicate disposition as applicable) - IF NONE SO STATE.

Provide as an Attachment Contractor's (and Contractor's proposed Subcontractors and Suppliers furnishing or performing Work having a value in excess of 10 percent of the total amount of the Bid) list of all safety citations or violations under any state all received within the last 5 years (indicate disposition as applicable) - IF NONE SO STATE.

Provide the following for the firm listed in Section V (and for each proposed Subcontractor furnishing or performing Work having a value in excess of 10 percent of the total amount of the Bid) the following (attach additional sheets as necessary):

Workers' compensation Experience Modification Rate (EMR) for the last 5 years:

YEAR	_____	EMR	_____
YEAR	_____	EMR	_____
YEAR	_____	EMR	_____
YEAR	_____	EMR	_____
YEAR	_____	EMR	_____

Total Recordable Frequency Rate (TRFR) for the last 5 years:

YEAR	_____	TRFR	_
YEAR	_____	TRFR	_
YEAR	_____	TRFR	_
YEAR	_____	TRFR	_
YEAR	_____	TRFR	_

Total number of man-hours worked for the last 5 Years:

YEAR	_____	TOTAL NUMBER OF MAN-	_____
YEAR	_____	TOTAL NUMBER OF MAN-	_____
YEAR	_____	TOTAL NUMBER OF MAN-	_____
YEAR	_____	TOTAL NUMBER OF MAN-	_____
YEAR	_____	TOTAL NUMBER OF MAN- HOURS	_____

Provide Contractor's (and Contractor's proposed Subcontractors and Suppliers furnishing or performing Work having a value in excess of 10 percent of the total amount of the Bid) Days Away From Work, Days of Restricted Work Activity or Job Transfer (DART) incidence rate for the particular industry or type of Work to be performed by Contractor and each of Contractor's proposed Subcontractors and Suppliers) for the last 5 years:

YEAR	_____	DART	_____
YEAR	_____	DART	_____
YEAR	_____	DART	_____
YEAR	_____	DART	_____
YEAR	_____	DART	_____

13. EQUIPMENT:

MAJOR EQUIPMENT:

List on **Schedule C** all pieces of major equipment available for use on Owner's Project.

14. SUBCONTRACTORS

MAJOR SUBCONTRACTORS:

List on **Schedule D** all "Major Subcontractors" planned for use on the Project. *Note submittal of Schedule D is not mandatory with bid package…. But will be provided within 5-days of OWNER's request.*

I HEREBY CERTIFY THAT THE INFORMATION SUBMITTED HEREWITH, INCLUDING ANY ATTACHMENTS, IS TRUE TO THE BEST OF MY KNOWLEDGE AND BELIEF.

NAME OF ORGANIZATION: _

BY: _____

TITLE: _____

DATED: _____

NOTARY ATTEST:

SUBSCRIBED AND SWORN TO BEFORE
ME THIS _____ DAY OF_____, 20___

NOTARY PUBLIC - STATE OF _____
MY COMMISSION EXPIRES:_____

REQUIRED ATTACHMENTS

1. Schedule A (Current Experience).
2. Schedule B (Previous Experience).

3. Schedule C (Major Equipment).
4. Audited balance sheet for each of the last 3 years for firm named in Section 1.
5. Evidence of authority for individuals listed in Section 7 to bind organization to an agreement.
6. Resumes of officers and key individuals (including Safety Officer) of firm named in Section 1.
7. Required safety program submittals listed in Section 13.
8. Additional items as pertinent.

SCHEDULE A

CURRENT
EXPERIENCE

Project Name	Owner's Contact Person	Design Engineer	Contract Date	Type of Work	Status	Cost of Work
	Name: Address: Telephone:	Name: Company: Telephone:				
	Name: Address: Telephone:	Name: Company: Telephone:				
	Name: Address: Telephone:	Name: Company: Telephone:				
	Name: Address: Telephone:	Name: Company: Telephone:				
	Name: Address: Telephone:	Name: Company: Telephone:				
	Name: Address: Telephone:	Name: Company: Telephone:				

	Name: Address: Telephone:	Name: Company: Telephone:				

SCHEDULE B

PREVIOUS EXPERIENCE (Include ALL Projects Completed within last 5 years)

Project Name	Owner's Contact Person	Design Engineer	Contract Date	Type of Work	Status	Cost of Work
	Name: Address: Telephone:	Name: Company: Telephone:				
	Name: Address: Telephone:	Name: Company: Telephone:				
	Name: Address: Telephone:	Name: Company: Telephone:				
	Name: Address: Telephone:	Name: Company: Telephone:				
	Name: Address: Telephone:	Name: Company: Telephone:				
	Name: Address: Telephone:	Name: Company: Telephone:				
	Name: Address: Telephone:	Name: Company: Telephone:				

SCHEDULE B

PREVIOUS EXPERIENCE (Include ALL Projects Completed within last 5 years)

Project Name	Owner's Contact Person	Design Engineer	Contract Date	Type of Work	Status	Cost of Work
	Name: Address: Telephone:	Name: Company: Telephone:				
	Name: Address: Telephone:	Name: Company: Telephone:				
	Name: Address: Telephone:	Name: Company: Telephone:				
	Name: Address: Telephone:	Name: Company: Telephone:				
	Name: Address: Telephone:	Name: Company: Telephone:				
	Name: Address: Telephone:	Name: Company: Telephone:				
	Name: Address: Telephone:	Name: Company: Telephone:				

SCHEDULE C - LIST OF MAJOR EQUIPMENT AVAILABLE

ITEM	PURCHASE DATE	CONDITION	ACQUIRED VALUE

SCHEDULE D – LIST OF MAJOR SUBCONTRACTORS

(If any of the given "MAJOR SUB-CONTRACTS" will not be used, so indicate by listing "NA" in the respective row under "PROPOSED SUBCONTRACTOR").

MAJOR SUB-CONTRACTS	**PROPOSED SUBCONTRACTOR**	**CITY / STATE**
Mechanical Work (HVAC)		
Mechanical Work (Plumbing)		
Electrical Work		
Roofing Work		
Site / Civil		
Dewatering		
Environmental / Groundwater Remediation		
OTHERS (PLEASE SPECIFY)		

SECTION 00 51 00
NOTICE OF AWARD

To: _____

Address: _____

Contract: **City of Missoula**

Project: **Garden City Compost Facility Improvements Project - 2025**

You are notified that your Bid dated: _____ for the above Contract has been considered. Your lump sum bid, with documentation, has been found to be in the best interest of the City and you are being provided this Notice of Award for a Contract for the construction of the Garden City Compost Facility Improvements Project - 2024.

The Contract Price of your Contract is _____ _____ **(in words),**

$ _____ (in figures).

You must comply with the following conditions precedent **within 14 days** of the date you receive this Notice of Award.

1. Deliver to the OWNER 2 copies of the fully executed counterparts of the Contract Documents.
2. Deliver required certificates of insurance, as described in the contract documents.
3. Deliver Bond Documents.

Failure to comply with these conditions within the time specified will entitle OWNER to consider your Cost Quotation in default, to annul this Notice of Award.

Within ten days after you comply with the above conditions, OWNER will return to you one fully executed counterpart of the Contract Documents.

DATED this _____ day of _____, 2025.

CITY OF MISSOULA

BY: _____

TITLE: _____

ACCEPTANCE OF NOTICE

Receipt of the above Notice of Award is hereby acknowledged this ____ day of _____, 2025.

_____
Contractor

BY: _____
Name Title

Copy to ENGINEER

END OF SECTION 00 51 00

SECTION 00 52 00
AGREEMENT BETWEEN OWNER AND CONTRACTOR
FOR CONSTRUCTION CONTRACT

THIS AGREEMENT is by and between **The City of Missoula, Montana** ("Owner") and _____ ("Contractor").

Owner and Contractor hereby agree as follows:

ARTICLE 1 – WORK

1.01 Contractor shall complete all Work as specified or indicated in the Contract Documents

1.01.1 The **Base Bid** Work is generally described as follows:

- Excavation and onsite stockpiling of approximately 15,000 yd^3 of unsuitable fill material;
- Import, backfill and compaction of approx. 22,300 yd^3 of 4"-minus structural fill;
- 12-bay, aerated static pile (ASP) composting system with reversing pressure operating capabilities – complete with: blowers; VFD's; aeration piping; dampers; in-floor aeration grates; concrete slab, push walls & footings; embedments; condensate collection and conveyance system;
- Two biofilters – complete with blowers; VFD's; delivery/diffuser piping; dampers; irrigation system; mud mat, concrete slab, containment walls & footings;
- Runoff collection system including three catch basins, submersible lift station and forcemain to the Missoula WRF plant drain;
- Sensing & control system - complete with wireless temperature probes O_2 sensors, manual dampers, communications, outputs to VFD's, data logging, alarms, etc.;
- New biosolids cake storage bin and pre-compost bin with new concrete slabs, embedments and cast-in-place walls/footings;
- Conex Control Building – support piers; HVAC; doors; windows; lighting; electrical;
- Condensate Collection: piping; sumps; grinder pump station; forcemain;
- Concrete rumble grate trough;
- Irrigation supply system: drilled groundwater well; casing; screen; drop pipe; pitless; piping; pump; pressure control system; irrigation control system; sprinkler piping and rotary heads;
- Ancillary site improvements, utility piping, communications systems and surface restoration

1.01.2 The **Additive Alternate A** Work is generally described as:

- Five-bay, aerated curing system utilizing blowers, diffuser piping and Eco-Blocks from the City's existing "Transitional Facility";

1.01.3 The **Additive Alternate B** Work is generally described as:

- Excavation and onsite stockpiling of approximately 1,820 yd^3 of unsuitable fill material;
- Import, backfill and compaction of approx. 3,120 yd^3 of 4"-minus structural fill;

Full, one-year warranty on materials and workmanship on all improvements.

ARTICLE 2 – THE PROJECT

2.01 The Project, of which the Work under the Contract Documents is a part, is generally described as follows: **Missoula – Garden City Compost Facility Improvements Project - 2025**

ARTICLE 3 – ENGINEER

3.01 The Project has been designed by:

A. Anderson-Montgomery Consulting Engineers, Inc. – 1064 N. Warren St., Helena, MT 59601 (406)449-3303

B. With Sub-Consulting provided by:

1. Jacobs Engineering Group, Inc. – 712 ND St., Livingston, MT 59047 (406)212-4520
2. Cushing Terrell – 306 W. Railroad St. Ste. 104, Missoula, MT 59802 (406)728-9522

3.02 The Owner has retained Anderson-Montgomery Consulting Engineers, Inc. ("Engineer") to act as Owner's representative, assume all duties and responsibilities, and have the rights and authority assigned to Engineer in the Contract Documents in connection with the completion of the Work in accordance with the Contract Documents.

ARTICLE 4 – CONTRACT TIMES

4.01 *Time of the Essence*

A. All time limits for Milestones, if any, Substantial Completion, and completion and readiness for final payment as stated in the Contract Documents are of the essence of the Contract. The Total Contract Time allowed for this Project will be **245 consecutive** calendar days from the date of the Notice to Proceed to the date of Substantial Completion.

4.02 *Contract Times: Dates*

A. The Work will be substantially completed on or before_____, and completed and ready for final payment in accordance with Paragraph 15.06 of the General Conditions on or before_____.

4.03 *Liquidated Damages*

A. Contractor and Owner recognize that time is of the essence as stated in Paragraph 4.01 above and that Owner will suffer financial and other losses if the Work is not

completed and Milestones not achieved within the times specified in Paragraph 4.02 above, plus any extensions thereof allowed in accordance with the Contract. The parties also recognize the delays, expense, and difficulties involved in proving in a legal or arbitration proceeding the actual loss suffered by Owner if the Work is not completed on time. Accordingly, instead of requiring any such proof, Owner and Contractor agree that as liquidated damages for delay (but not as a penalty):

1. Substantial Completion: Contractor shall pay the Owner up to **$1,000.00** for each day that expires after the time (as duly adjusted pursuant to the Contract) specified in Paragraph 4.02.A above for Substantial Completion until the Work is substantially complete.
2. Completion of Remaining Work: After Substantial Completion, if Contractor shall neglect, refuse, or fail to complete the remaining Work within the Contract Time (as duly adjusted pursuant to the Contract) for completion and readiness for final payment, Contractor shall pay Owner up to **$750.00** for each day that expires after such time until the Work is completed and ready for final payment.
3. Liquidated damages for failing to timely attain Substantial Completion and final completion are not additive and will not be imposed concurrently.

4.04 *Special Damages*

[DELETED]

ARTICLE 5 – CONTRACT PRICE

5.01 Owner shall pay Contractor for completion of the Work in accordance with the Contract Documents the amounts that follow, subject to adjustment under the Contract:

1. Mobilization _____
2. Lump Sum for General Construction _____
3. Equipment Procurement Bid Amount _____
4. Total Bid Amount (Sum of 1-3) _____

ARTICLE 6 – PAYMENT PROCEDURES

6.01 *Submittal and Processing of Payments*

A. Contractor shall submit Applications for Payment in accordance with Article 15 of the General Conditions. Applications for Payment will be processed by Engineer as provided in the General Conditions.

6.02 *Progress Payments; Retainage*

A. Owner shall make progress payments on account of the Contract Price on the basis of Contractor's Applications for Payment on or about the 15th day of each month during performance of the Work as provided in Paragraph 6.02.A.1 below, provided that such Applications for Payment have been submitted in a

timely manner and otherwise meet the requirements of the Contract. All such payments will be measured by the Schedule of Values established as provided in the General Conditions (and in the case of Unit Price Work based on the number of units completed) or, in the event there is no Schedule of Values, as provided elsewhere in the Contract.

1. Prior to Substantial Completion, progress payments will be made in an amount equal to the percentage indicated below but, in each case, less the aggregate of payments previously made and less such amounts as Owner may withhold, including but not limited to liquidated damages, in accordance with the Contract

   a. **95** percent of Work completed (with the balance being retainage; and

   b. **95**percent of cost of materials and equipment not incorporated in the Work (with the balance being retainage).

B. Upon Substantial Completion **of the entire construction to be provided under the Contract Documents**, Owner shall pay an amount sufficient to increase total payments to Contractor to **97.5** percent of the Work completed, less such amounts set off by Owner pursuant to Paragraph 15.01.E of the General Conditions, and less **200** percent of Engineer's estimate of the value of Work to be completed or corrected as shown on the punch list of items to be completed or corrected prior to final payment.

6.03 *Final Payment*

A. Upon final completion and acceptance of the Work in accordance with Paragraph 15.06 of the General Conditions, Owner shall pay the remainder of the Contract Price as recommended by Engineer as provided in said Paragraph 15.06.

6.04 *Gross Receipts Withholding Requirements*

A. Pursuant to Section 15-50-206(2)(3), MCA, the Owner is required to withhold one percent (1%) of all payments due the Contractor and is required to transmit such moneys to the Montana Department of Revenue as part of the public contractor's license fee. In like fashion, the Contractor is required to withhold one percent (1%) from payments to subcontracors.

ARTICLE 7 – INTEREST

7.01 All amounts not paid when due shall bear interest at the **maximum rate allowed by law at the place of the Project**.

ARTICLE 8 – CONTRACTOR'S REPRESENTATIONS

8.01 In order to induce Owner to enter into this Contract, Contractor makes the following representations:

A. Contractor has examined and carefully studied the Contract Documents, and any data and reference items identified in the Contract Documents.

B. Contractor has visited the Site, conducted a thorough, alert visual examination of the Site and adjacent areas, and become familiar with and is satisfied as to the general,

local, and Site conditions that may affect cost, progress, and performance of the Work.

C. Contractor is familiar with and is satisfied as to all Laws and Regulations that may affect cost, progress, and performance of the Work.

D. Contractor has carefully studied all: (1) reports of explorations and tests of subsurface conditions at or adjacent to the Site and all drawings of physical conditions relating to existing surface or subsurface structures at the Site that have been identified in the Supplementary Conditions, especially with respect to Technical Data in such reports and drawings, (2) reports and drawings relating to Hazardous Environmental Conditions, if any, at or adjacent to the Site that have been identified in the Supplementary Conditions, especially with respect to Technical Data in such reports and drawings, and (3) reports and drawings related to other work scheduled in the general vicinity of the project during the planned construction period.

E. Contractor has considered the information known to Contractor itself; information commonly known to contractors doing business in the locality of the Site; information and observations obtained from visits to the Site; the Contract Documents; and the Site-related reports and drawings identified in the Contract Documents, with respect to the effect of such information, observations, and documents on (1) the cost, progress, and performance of the Work; (2) the means, methods, techniques, sequences, and procedures of construction to be employed by Contractor; and (3) Contractor's safety precautions and programs.

F. Based on the information and observations referred to in the preceding paragraph, Contractor agrees that no further examinations, investigations, explorations, tests, studies, or data are necessary for the performance of the Work at the Contract Price, within the Contract Times, and in accordance with the other terms and conditions of the Contract.

G. Contractor is aware of the general nature of work to be performed by Owner and others at the Site that relates to the Work as indicated in the Contract Documents.

H. Contractor has given Engineer written notice of all conflicts, errors, ambiguities, or discrepancies that Contractor has discovered in the Contract Documents, and the written resolution thereof by Engineer is acceptable to Contractor.

I. The Contract Documents are generally sufficient to indicate and convey understanding of all terms and conditions for performance and furnishing of the Work.

J. Contractor's entry into this Contract constitutes an incontrovertible representation by Contractor that without exception all prices in the Agreement are premised upon performing and furnishing the Work required by the Contract Documents.

ARTICLE 9 – CONTRACT DOCUMENTS

9.01 *Contents*

A. The Contract Documents consist of the following:

1. This Agreement

2. Performance bond
3. Payment bond
4. General Conditions
5. Supplementary Conditions
6. Specifications:
    a. Work Plan (See Section 01 11 00)
    b. As listed in the table of contents of the Project Manual.
    c. Montana Public Works Standard Specifications (Current Edition)
    d. Missoula City Public Works Standards & Specifications Manual – 2024
7. Construction Drawings (not attached but incorporated by reference) consisting of the Drawings listed on the attached sheet index, each bearing the following general title: City of Missoula - Garden City Compost Facility Improvements Project - 2025
8. Addenda
9. Exhibits to this Agreement (enumerated as follows):
    a. Funding Agency Special Provisions for Montana Public Facility Projects
10. The following which may be delivered or issued on or after the Effective Date of the Contract and are not attached hereto:
    a. Notice to Proceed.
    b. Work Change Directives.
    c. Change Orders.
    d. Field Orders.

B. The documents listed in Paragraph 9.1.A are attached to this Agreement (except as expressly noted otherwise above).

C. There are no Contract Documents other than those listed above in this Article 9.

D. The Contract Documents may only be amended, modified, or supplemented as provided in the General Conditions.

ARTICLE 10 – MISCELLANEOUS

10.01 *Terms*

A. Terms used in this Agreement will have the meanings stated in the General Conditions and the Supplementary Conditions.

10.02 *Assignment of Contract*

A. Unless expressly agreed to elsewhere in the Contract, no assignment by a party hereto of any rights under or interests in the Contract will be binding on another party hereto without the written consent of the party sought to be bound; and, specifically but without limitation, money that may become due and money that is due may

not be assigned without such consent (except to the extent that the effect of this restriction may be limited by law), and unless specifically stated to the contrary in any written consent to an assignment, no assignment will release or discharge the assignor from any duty or responsibility under the Contract Documents.

10.03 *Successors and Assigns*

A. Owner and Contractor each binds itself, its successors, assigns, and legal representatives to the other party hereto, its successors, assigns, and legal representatives in respect to all covenants, agreements, and obligations contained in the Contract Documents.

10.04 *Severability*

A. Any provision or part of the Contract Documents held to be void or unenforceable under any Law or Regulation shall be deemed stricken, and all remaining provisions shall continue to be valid and binding upon Owner and Contractor, who agree that the Contract Documents shall be reformed to replace such stricken provision or part thereof with a valid and enforceable provision that comes as close as possible to expressing the intention of the stricken provision.

10.05 *Contractor's Certifications*

A. Contractor certifies that it has not engaged in corrupt, fraudulent, collusive, or coercive practices in competing for or in executing the Contract. For the purposes of this Paragraph 10.05:

1. "corrupt practice" means the offering, giving, receiving, or soliciting of anything of value likely to influence the action of a public official in the bidding process or in the Contract execution;

2. "fraudulent practice" means an intentional misrepresentation of facts made (a) to influence the bidding process or the execution of the Contract to the detriment of Owner, (b) to establish Bid or Contract prices at artificial non-competitive levels, or (c) to deprive Owner of the benefits of free and open competition;

3. "collusive practice" means a scheme or arrangement between two or more Bidders, with or without the knowledge of Owner, a purpose of which is to establish Bid prices at artificial, non-competitive levels; and

4. "coercive practice" means harming or threatening to harm, directly or indirectly, persons or their property to influence their participation in the bidding process or affect the execution of the Contract.

10.06 *Other Provisions*

A. Owner stipulates that if the General Conditions that are made a part of this Contract are based on EJCDC® C-700, Standard General Conditions for the Construction Contract, published by the Engineers Joint Contract Documents Committee®, and if Owner is the party that has furnished said General Conditions, then Owner has plainly shown all modifications to the standard wording of such published document to the Contractor, through a process such as highlighting or "track changes" (redline/strikeout), or in the Supplementary Conditions.

IN WITNESS WHEREOF, Owner and Contractor have signed this Agreement.

This Agreement will be effective on _____ (which is the Effective Date of the Contract).

OWNER:	**CONTRACTOR:**
CITY OF MISSOULA, MONTANA	_____
By:_____ Print Name: Andrea Davis Title: Mayor	By: _____ Print Name: _____ *(If Contractor is a corporation, a partnership, or a joint venture, attach evidence of authority to sign.)*
Attest:_____ Print Name: _____ Title:	Attest:_____ Print Name: _____ Title:
Address for giving notices: City of Missoula 435 Ryman Street Missoula, MT 59802	Address for giving notices: _____ _____

(If Owner is a corporation, attach evidence of authority to sign. If Owner is a public body, attach evidence of authority to sign and resolution or other documents authorizing execution of this Agreement.)

NOTE TO USER: Use in those states or other jurisdictions where applicable or required.

SECTION 00 55 00
NOTICE TO PROCEED

Owner: **City of Missoula**

Owner's Contract No.:

Contractor:

Contractor's Project No.:

Engineer: **Anderson Montgomery Consulting Engineers**

Engineer's Project No.:

Project: **City of Missoula – Garden City Compost Facility Improvements Project - 2024**

Contract Name:

Effective Date of Contract:

TO CONTRACTOR:

Owner hereby notifies Contractor that the Contract Times under the above Contract will commence to run on _____, 2025. (see Paragraph 4.01 of the General Conditions)

On that date, Contractor shall start performing its obligations under the Contract Documents. No Work shall be done at the Site prior to such date. In accordance with the Agreement, [the date of Substantial Completion is _____, and the date of readiness for final payment is_____.

Before starting any Work at the Site, Contractor must comply with the following:
[Note any access limitations, security procedures, or other restrictions]

_____

Recommended:	Accepted:	Accepted:
_____	_____	_____
Engineer (Authorized Signature)	Owner (Authorized Signature)	Contractor (Authorized Signature)
_____	_____	_____
(Date)	(Date)	(Date)

SECTION 00 61 10
PERFORMANCE BOND

CONTRACTOR *(name and address)*: SURETY *(name and address of principal place of business)*:

OWNER *:*

City of Missoula – Garden City Compost Facility Improvements – 2025.
City of Missoula, 435 Ryman St., Missoula, MT 59802

CONSTRUCTION CONTRACT
Effective Date of the
Agreement: Amount:
Description *(name and location)*:

BOND
Bond Number:
Date *(not earlier than the Effective Date of the Agreement of the Construction Contract)*:
Amount:
Modifications to this Bond Form: None See Paragraph 16

Surety and Contractor, intending to be legally bound hereby, subject to the terms set forth below, do each cause this Performance Bond to be duly executed by an authorized officer, agent, or representative.

CONTRACTOR AS PRINCIPAL	**SURETY**
_____*(seal)*	_____*(seal)*
Contractor's Name and Corporate Seal	Surety's Name and Corporate Seal
By:_____	**By:**_____
Signature	Signature *(attach power of attorney)*
_____	_____
Print Name	Print Name
_____	_____
Title	Title
Attest:_____	**Attest:**_____
Signature	Signature
_____	_____
Title	Title

Notes: (1) Provide supplemental execution by any additional parties, such as joint venturers. (2) Any singular reference to Contractor, Surety, Owner, or other party shall be considered plural where applicable.

1. The Contractor and Surety, jointly and severally, bind themselves, their heirs, executors, administrators, successors, and assigns to the Owner for the performance of the Construction Contract, which is incorporated herein by reference.

2. If the Contractor performs the Construction Contract, the Surety and the Contractor shall have no obligation under this Bond, except when applicable to participate in a conference as provided in Paragraph 3.

3. If there is no Owner Default under the Construction Contract, the Surety's obligation under this Bond shall arise after:

3.1 The Owner first provides notice to the Contractor and the Surety that the Owner is considering declaring a Contractor Default. Such notice shall indicate whether the Owner is requesting a conference among the Owner, Contractor, and Surety to discuss the Contractor's performance. If the Owner does not request a conference, the Surety may, within five (5) business days after receipt of the Owner's notice, request such a conference. If the Surety timely requests a conference, the Owner shall attend. Unless the Owner agrees otherwise, any conference requested under this Paragraph 3.1 shall be held within ten (10) business days of the Surety's receipt of the Owner's notice. If the Owner, the Contractor, and the Surety agree, the Contractor shall be allowed a reasonable time to perform the Construction Contract, but such an agreement shall not waive the Owner's right, if any, subsequently to declare a Contractor Default;

3.2 The Owner declares a Contractor Default, terminates the Construction Contract and notifies the Surety; and

3.3 The Owner has agreed to pay the Balance of the Contract Price in accordance with the terms of the Construction Contract to the Surety or to a contractor selected to perform the Construction Contract.

4. Failure on the part of the Owner to comply with the notice requirement in Paragraph 3.1 shall not constitute a failure to comply with a condition precedent to the Surety's obligations, or release the Surety from its obligations, except to the extent the Surety demonstrates actual prejudice.

5. When the Owner has satisfied the conditions of Paragraph 3, the Surety shall promptly and at the Surety's expense take one of the following actions:

5.1 Arrange for the Contractor, with the consent of the Owner, to perform and complete the Construction Contract;

5.2 Undertake to perform and complete the Construction Contract itself, through its agents or independent contractors;

5.3 Obtain bids or negotiated proposals from qualified contractors acceptable to the Owner for a contract for performance and completion of the Construction Contract, arrange for a contract to be prepared for execution by the Owner and a contractor selected with the Owners concurrence, to be secured with performance and payment bonds executed by a qualified surety equivalent to the bonds issued on the

Construction Contract, and pay to the Owner the amount of damages as described in Paragraph 7 in excess of the Balance of the Contract Price incurred by the Owner as a result of the Contractor Default; or

5.4 Waive its right to perform and complete, arrange for completion, or obtain a new contractor, and with reasonable promptness under the circumstances:

5.4.1 After investigation, determine the amount for which it may be liable to the Owner and, as soon as practicable after the amount is determined, make payment to the Owner; or

5.4.2 Deny liability in whole or in part and notify the Owner, citing the reasons for denial.

6. If the Surety does not proceed as provided in Paragraph 5 with reasonable promptness, the Surety shall be deemed to be in default on this Bond seven days after receipt of an additional written notice from the Owner to the Surety demanding that the Surety perform its obligations under this Bond, and the Owner shall be entitled to enforce any remedy available to the Owner. If the Surety proceeds as provided in Paragraph 5.4, and the Owner refuses the payment or the Surety has denied liability, in whole or in part, without further notice the Owner shall be entitled to enforce any remedy available to the Owner.

7. If the Surety elects to act under Paragraph 5.1, 5.2, or 5.3, then the responsibilities of the Surety to the Owner shall not be greater than those of the Contractor under the Construction Contract, and the responsibilities of the Owner to the Surety shall not be greater than those of the Owner under the Construction Contract. Subject to the commitment by the Owner to pay the Balance of the Contract Price, the Surety is obligated, without duplication for:

7.1 the responsibilities of the Contractor for correction of defective work and completion of the Construction Contract;

7.2 additional legal, design professional, and delay costs resulting from the Contractor's Default, and resulting from the actions or failure to act of the Surety under Paragraph 5; and

7.3 liquidated damages, or if no liquidated damages are specified in the Construction Contract, actual damages caused by delayed performance or non-performance of the Contractor.

8. If the Surety elects to act under Paragraph 5.1, 5.3, or 5.4, the Surety's liability is limited to the amount of this Bond.

9. The Surety shall not be liable to the Owner or others for obligations of the Contractor that are unrelated to the Construction Contract, and the Balance of the Contract Price shall not be reduced or set off on account of any such unrelated obligations. No right of action shall accrue on this Bond to any person or entity other than the Owner or its heirs, executors, administrators, successors, and assigns.

10. The Surety hereby waives notice of any change, including changes of time, to the Construction Contract or to related subcontracts, purchase orders, and other obligations.

11. Any proceeding, legal or equitable, under this Bond may be instituted in any court of competent jurisdiction in the location in which the work or part of the work is located and shall be instituted within two years after a declaration of Contractor Default or within two years after the Contractor ceased working or within two years after the Surety refuses or fails to perform its obligations under this Bond, whichever occurs first. If the provisions of this paragraph are void or prohibited by law, the minimum periods of limitations available to sureties as a defense in the jurisdiction of the suit shall be applicable.

12. Notice to the Surety, the Owner, or the Contractor shall be mailed or delivered to the address shown on the page on which their signature appears.

13. When this Bond has been furnished to comply with a statutory or other legal requirement in the location where the construction was to be performed, any provision in this Bond conflicting with said statutory or legal requirement shall be deemed deleted herefrom and provisions conforming to such statutory or other legal requirement shall be deemed incorporated herein. When so furnished, the intent is that this Bond shall be construed as a statutory bond and not as a common law bond.

14. Definitions

14.1 Balance of the Contract Price: The total amount payable by the Owner to the Contractor under the Construction Contract after all proper adjustments have been made including allowance for the Contractor for any amounts received or to be received by the Owner in settlement of insurance or other claims for damages to which the Contractor is entitled, reduced by all valid and proper payments made to or on behalf of the Contractor under the Construction Contract.

14.2 Construction Contract: The agreement between the Owner and Contractor identified on the cover page, including all Contract Documents and changes made to the agreement and the Contract Documents.

14.3 Contractor Default: Failure of the Contractor, which has not been remedied or waived, to perform or otherwise to comply with a material term of the Construction Contract.

14.4 Owner Default: Failure of the Owner, which has not been remedied or waived, to pay the Contractor as required under the Construction Contract or to perform and complete or comply with the other material terms of the Construction Contract.

14.5 Contract Documents: All the documents that comprise the agreement between the Owner and Contractor.

15. If this Bond is issued for an agreement between a contractor and subcontractor, the term Contractor in this Bond shall be deemed to be Subcontractor and the term Owner shall be deemed to be Contractor.

16. Modifications to this Bond are as follows:

SECTION 00 61 13
PAYMENT BOND

CONTRACTOR *(name and address)*:

SURETY *(name and address of principal place of business)*:

OWNER :
City of Missoula – Garden City Compost Facility Improvements – 2025.
City of Missoula, 435 Ryman St., Missoula, MT 59802

CONSTRUCTION CONTRACT
Effective Date of the
Agreement: Amount:
Description *(name and location)*:

BOND
Bond Number:
Date *(not earlier than the Effective Date of the Agreement of the Construction Contract)*:
Amount:
Modifications to this Bid Form: None See Paragraph 18

Surety and Contractor, intending to be legally bound hereby, subject to the terms set forth below, do each cause this Payment Bond to be duly executed by an authorized officer, agent, or representative.

CONTRACTOR AS PRINCIPAL

_____*(seal)*
Contractor's Name and Corporate Seal

By:_____
Signature

_____
Print Name

_____
Title

Attest:_____
Signature

_____
Title

SURETY

_____*(seal)*
Surety's Name and Corporate Seal

By: _____
Signature *(attach power of attorney)*

_____
Print Name

_____
Title

Attest:_____
Signature

_____
Title

Notes: (1) Provide supplemental execution by any additional parties, such as joint venturers. (2) Any singular reference to Contractor, Surety, Owner, or other party shall be considered plural where applicable.

1. The Contractor and Surety, jointly and severally, bind themselves, their heirs, executors, administrators, successors, and assigns to the Owner to pay for labor, materials, and equipment furnished for use in the performance of the Construction Contract, which is incorporated herein by reference, subject to the following terms.

2. If the Contractor promptly makes payment of all sums due to Claimants, and defends, indemnifies, and holds harmless the Owner from claims, demands, liens, or suits by any person or entity seeking payment for labor, materials, or equipment furnished for use in the performance of the Construction Contract, then the Surety and the Contractor shall have no obligation under this Bond.

3. If there is no Owner Default under the Construction Contract, the Surety's obligation to the Owner under this Bond shall arise after the Owner has promptly notified the Contractor and the Surety (at the address described in Paragraph 13) of claims, demands, liens, or suits against the Owner or the Owner's property by any person or entity seeking payment for labor, materials, or equipment furnished for use in the performance of the Construction Contract, and tendered defense of such claims, demands, liens, or suits to the Contractor and the Surety.

4. When the Owner has satisfied the conditions in Paragraph 3, the Surety shall promptly and at the Surety's expense defend, indemnify, and hold harmless the Owner against a duly tendered claim, demand, lien, or suit.

5. The Surety's obligations to a Claimant under this Bond shall arise after the following:

   5.1 Claimants who do not have a direct contract with the Contractor,

      5.1.1 have furnished a written notice of non- payment to the Contractor, stating with substantial accuracy the amount claimed and the name of the party to whom the materials were, or equipment was, furnished or supplied or for whom the labor was done or performed, within ninety (90) days after having last performed labor or last furnished materials or equipment included in the Claim; and

      5.1.2 have sent a Claim to the Surety (at the address described in Paragraph 13).

   5.2 Claimants who are employed by or have a direct contract with the Contractor have sent a Claim to the Surety (at the address described in Paragraph 13).

6. If a notice of non-payment required by Paragraph 5.1.1 is given by the Owner to the Contractor, that is sufficient to

satisfy a Claimant's obligation to furnish a written notice of non-payment under Paragraph 5.1.1.

7. When a Claimant has satisfied the conditions of Paragraph 5.1 or 5.2, whichever is applicable, the Surety shall promptly and at the Surety's expense take the following actions:

   7.1 Send an answer to the Claimant, with a copy to the Owner, within sixty (60) days after receipt of the Claim, stating the amounts that are undisputed and the basis for challenging any amounts that are disputed; and

   7.2 Pay or arrange for payment of any undisputed amounts.

   7.3 The Surety's failure to discharge its obligations under Paragraph 7.1 or 7.2 shall not be deemed to constitute a waiver of defenses the Surety or Contractor may have or acquire as to a Claim, except as to undisputed amounts for which the Surety and Claimant have reached agreement. If, however, the Surety fails to discharge its obligations under Paragraph 7.1 or 7.2, the Surety shall indemnify the Claimant for the reasonable attorney's fees the Claimant incurs thereafter to recover any sums found to be due and owing to the Claimant.

8. The Surety's total obligation shall not exceed the amount of this Bond, plus the amount of reasonable attorney's fees provided under Paragraph 7.3, and the amount of this Bond shall be credited for any payments made in good faith by the Surety.

9. Amounts owed by the Owner to the Contractor under the Construction Contract shall be used for the performance of the Construction Contract and to satisfy claims, if any, under any construction performance bond. By the Contractor furnishing and the Owner accepting this Bond, they agree that all funds earned by the Contractor in the performance of the Construction Contract are dedicated to satisfy obligations of the Contractor and Surety under this Bond, subject to the Owner's priority to use the funds for the completion of the work.

10. The Surety shall not be liable to the Owner, Claimants, or others for obligations of the Contractor that are unrelated to the Construction Contract. The Owner shall not be liable for the payment of any costs or expenses of any Claimant under this Bond, and shall have under this Bond no obligation to make payments to or give notice on behalf of Claimants, or otherwise have any obligations to Claimants under this Bond.

11. The Surety hereby waives notice of any change, including changes of time, to the Construction Contract or to related subcontracts, purchase orders, and other obligations.

12. No suit or action shall be commenced by a Claimant under this Bond other than in a court of competent jurisdiction in the state in which the project that is the subject of the

Construction Contract is located or after the expiration of one year from the date (1) on which the Claimant sent a Claim to the Surety pursuant to Paragraph 5.1.2 or 5.2, or (2) on which the last labor or service was performed by anyone or the last materials or equipment were furnished by anyone under the Construction Contract, whichever of (1) or (2) first occurs. If the provisions of this paragraph are void or prohibited by law, the minimum period of limitation available to sureties as a defense in the jurisdiction of the suit shall be applicable.

13. Notice and Claims to the Surety, the Owner, or the Contractor shall be mailed or delivered to the address shown on the page on which their signature appears. Actual receipt of notice or Claims, however accomplished, shall be sufficient compliance as of the date received.

14. When this Bond has been furnished to comply with a statutory or other legal requirement in the location where the construction was to be performed, any provision in this Bond conflicting with said statutory or legal requirement shall be deemed deleted herefrom and provisions conforming to such statutory or other legal requirement shall be deemed incorporated herein. When so furnished, the intent is that this Bond shall be construed as a statutory bond and not as a common law bond.

15. Upon requests by any person or entity appearing to be a potential beneficiary of this Bond, the Contractor and Owner shall promptly furnish a copy of this Bond or shall permit a copy to be made.

16. **Definitions**

    16.1 **Claim:** A written statement by the Claimant including at a minimum:

    1. The name of the Claimant;
    2. The name of the person for whom the labor was done, or materials or equipment furnished;
    3. A copy of the agreement or purchase order pursuant to which labor, materials, or equipment was furnished for use in the performance of the Construction Contract;
    4. A brief description of the labor, materials, or equipment furnished;
    5. The date on which the Claimant last performed labor or last furnished materials or equipment for use in the performance of the Construction Contract;
    6. The total amount earned by the Claimant for labor, materials, or equipment furnished as of the date of the Claim;
    7. The total amount of previous payments received by the Claimant; and
    8. The total amount due and unpaid to the Claimant for labor, materials, or equipment furnished as of the date of the Claim.

16.2 **Claimant:** An individual or entity having a direct contract with the Contractor or with a subcontractor of the Contractor to furnish labor, materials, or equipment for use in the performance of the Construction Contract. The term Claimant also includes any individual or entity that has rightfully asserted a claim under an applicable mechanic's lien or similar statute against the real property upon which the Project is located. The intent of this Bond shall be to include without limitation in the terms of "labor, materials, or equipment" that part of the water, gas, power, light, heat, oil, gasoline, telephone service, or rental equipment used in the Construction Contract, architectural and engineering services required for performance of the work of the Contractor and the Contractor's subcontractors, and all other items for which a mechanic's lien may be asserted in the jurisdiction where the labor, materials, or equipment were furnished.

16.3 **Construction Contract:** The agreement between the Owner and Contractor identified on the cover page, including all Contract Documents and all changes made to the agreement and the Contract Documents.

16.4 **Owner Default**: Failure of the Owner, which has not been remedied or waived, to pay the Contractor as required under the Construction Contract or to perform and complete or comply with the other material terms of the Construction Contract.

16.5 **Contract Documents:** All the documents that comprise the agreement between the Owner and Contractor.

17. If this Bond is issued for an agreement between a contractor and subcontractor, the term Contractor in this Bond shall be deemed to be Subcontractor and the term Owner shall be deemed to be Contractor.

18. Modifications to this Bond are as follows:

PARTIAL PAYMENT ESTIMATE

Garden City Compost Improvements - 2025				Contractor's Application for Payment No:	
Owner:		**Contractor:**		**Contract No.** _____	**Schedule No.** _____
City of Missoula		Business Name:		**Partial Payment Estimate No.**	
435 Ryman Street		Business Address:		**Page**	**Of**
Missoula, MT 59802		Contact			
Contact:	Logan McInnis, P.E. DDU	Contact Cell #:		**PERIOD OF ESTIMATE**	
				From	**To**

CONTRACT CHANGE ORDER SUMMARY				ESTIMATE	
No	Approval	Amount		Original Contract	
	Date	Additions	Deductions	Change Orders	
				Revised Contract	
				Work Completed	
				Stored Materials	$ -
				SUBTOTAL	$ -
				Retainage	$ -
				Previous Payments	$ -
				Gross Amount Due	$ -
TOTALS		$ -	$ -	1% MT Gross Receipts Tax	$ -
NET CHANGE		$ -		Net Due to Contractor	$ -

CONTRACT TIME			
Contract Time	245	Start	
From Change Order		Stop	
Total Contract Time	0	Weather Days	
Time Used		Substaintial Completion	
Total Days Remaining	0		
Percent of Time Used	#DIV/0!		

CONTRACTOR'S CERTIFICATION

The undersigned Contractor certifies that to the best of their knowldge, information and belief the work covered by this payment extimate has been completed in accordance with the contract documents, that all amounts have been paid by the contractor for work for whicyh previous payment estimates was issued and payments received from the owner, and that current shown herein is now due.

Contractor _____

By _____

Date _____

APPROVED BY OWNER

Owner **City of Missoula, Montana**

By _____

Date _____

ENGINEER'S CERTIFICATION

The undersigned certifies that the work has been carefully inspected and to the best of their knowledge and belief. The quantities shown in this estimate are correct and the work has been performed in accordance with the contract documents.

Engineer **Anderson-Montgomery Consulting Engineers, Inc.**

By _____

Date _____

ACCEPTED BY AGENCY

The review and acceptance of this estimate does not attest to the correctness of the quantities shown or that the work has been performed in accordance with the contract documents.

By _____

Title _____

Date _____

Progress Estimate - Lump Sum Work

Contractor's Application

For (Contract):	Application Number:
Application Period:	Application Date:

			Work Completed		E	F		G
A		B	C	D				
Bid Item No.	Description	Scheduled Value ($)	From Previous Application (C+D)	This Period	Materials Presently Stored (not in C or D)	Total Completed and Stored to Date (C + D + E)	% (F / B)	Balance to Finish (B - F)
	Totals							

Stored Material Summary **Contractor's Application**

For (Contract):								Application Number:			
Application Period:								Application Date:			
A		B	C		D		E	Subtotal Amount Completed and Stored to Date (D + E)	F		G
Bid Item No.	Supplier Invoice No.	Submittal No. (with Specification Section No.)	Storage Location	Description of Materials or Equipment Stored	Stored Previously		Amount Stored this Month ($)		Incorporated in Work		Materials Remaining in Storage ($) (D + E - F)
					Date Placed into Storage (Month/Year)	Amount ($)			Date (Month / Year)	Amount ($)	
				Totals							

SECTION 00 63 49
WORK CHANGE DIRECTIVE

No._____

Date of Issuance:_____ Effective Date:_____

Project: Garden City Compost Facility Improvements Project - 2025	Owner: City of Missoula, Montana	Owner's Contract No.:
Contract:		Date of Contract:
Equipment Seller:		Engineer's Project No.:

You are directed to proceed promptly with the following change(s):

Item No.	Description

Attachments (list documents supporting change):

_____

_____

Purpose for Work Change Directive:

□ Authorizations fort Work described herein to proceed on the basis of Cost of the Work due to:

□ Non-agreement on pricing of proposed change.

□ Necessity to expedite Work described herein prior to agreeing to changes on Contract Price and Contract Time.

Estimated change in Contract Price and Contract Times:

Contract Price $_____ (increase/decrease) Contract Time_____ (increase/decrease) Days

If the change involves an increase, the estimated amounts are not to be exceeded without further authorization.

Recommended for Approval by Engineer:	Date
Authorized for Owner by:	Date
Accepted for Equipment Seller by:	Date
Approved by Funding Agency (if applicable):	Date

END OF SECTION 00 63 49

SECTION 00 63 63
CHANGE ORDER

Change Order No: _____ Date of Issuance:_____Effective Date: _

Project: Garden City Compost Facility Improvements Project - 2025	Owner: City of Missoula, Montana	Owner's Contract No.:
Contract:		Date of Contract:
Contractor:		Engineer's Project No.:

The Contract Documents are modified as follows upon execution of this Change Order:

Description:

Attachments: (List documents supporting change):

CHANGE IN CONTRACT PRICE:

Original Contract Price:

$_____

_____

[Increase] [Decrease] from previously approved Change Orders No._____to No._____:

$_____

Contract Price prior to this Change Order:

CHANGE IN CONTRACT TIMES:

Original Contract Times: □□Working days

□□Calendar days Substantial completion (days or date): _____

_____

Ready for final payment (days or date): _

[Increase] [Decrease] from previously approved Change Orders No.to No.:
Substantial completion (days): _____

Ready for final payment (days): _____

Contract Times prior to this Change Order:
Substantial completion (days or date): _____

$_____ Ready for final payment (days or date): _____

[Increase] [Decrease] of this Change Order: [Increase] [Decrease] of this Change Order:

Substantial completion (days or date): _____

$_____ Ready for final payment (days or date): _____

Contract Price incorporating this Change Order: Contract Times with all approved Change Orders:

Substantial completion (days or date): _____

$_____ Ready for final payment (days or date): _____

RECOMMENDED:	ACCEPTED:	ACCEPTED:
By:_____	By:_____	By: _____
Engineer (Authorized Signature)	Owner (Authorized Signature)	Contractor (Authorized Signature)
Date:_____	Date:_____	Date: _____

Approved by Funding Agency (if applicable):_____ Date:

SECTION 00 65 16
CERTIFICATE OF SUBSTANTIAL COMPLETION

Owner: **City of Missoula**	Owner's Contract No.:
Contractor:	Contractor's Project No.:
Engineer: **Anderson Montgomery Consulting Engineers**	Engineer's Project No.:
Project: **Garden City Compost Facility Improvements Project - 2025**	Contract Name:

This [preliminary] [final] Certificate of Substantial Completion applies to:

☐ All Work ☐ The following specified portions of the Work:

_____

Date of Substantial Completion

The Work to which this Certificate applies has been inspected by authorized representatives of Owner, Contractor, and Engineer, and found to be substantially complete. The Date of Substantial Completion of the Work or portion thereof designated above is hereby established, subject to the provisions of the Contract pertaining to Substantial Completion. The date of Substantial Completion in the final Certificate of Substantial Completion marks the commencement of the contractual correction period and applicable warranties required by the Contract.

A punch list of items to be completed or corrected is attached to this Certificate. This list may not be all-inclusive, and the failure to include any items on such list does not alter the responsibility of the Contractor to complete all Work in accordance with the Contract.

The responsibilities between Owner and Contractor for security, operation, safety, maintenance, heat, utilities, insurance, and warranties upon Owner's use or occupancy of the Work shall be as provided in the Contract, except as amended as follows: *[Note: Amendments of contractual responsibilities recorded in this Certificate should be the product of mutual agreement of Owner and Contractor; see Paragraph 15.03.D of the General Conditions.]*

Amendments to Owner's responsibilities:

☐ None

☐ As follows

Amendments to Contractor's responsibilities:

☐ None

☐ As follows:

The following documents are attached to and made a part of this Certificate: *[punch list; others]*

This Certificate does not constitute an acceptance of Work not in accordance with the Contract Documents, nor is it a release of Contractor's obligation to complete the Work in accordance with the Contract.

EXECUTED BY ENGINEER:	RECEIVED:	RECEIVED:
By: _____	By: _____	By: _____
(Authorized signature)	Owner (Authorized Signature)	Contractor (Authorized Signature)
Title: _____	Title: _____	Title: _____
Date: _____	Date: _____	Date: _____

This document has important legal consequences; consultation with an attorney is encouraged with respect to its use or modification. This document should be adapted to the particular circumstances of the contemplated Project and the controlling Laws and Regulations.

SECTION 00 72 00 STANDARD GENERAL CONDITIONS OF THE CONSTRUCTION CONTRACT

Prepared by

EJCDC®
ENGINEERS JOINT CONTRACT DOCUMENTS COMMITTEE

Issued and Published Jointly by

ACEC
AMERICAN COUNCIL OF ENGINEERING COMPANIES

ASCE
AMERICAN SOCIETY OF CIVIL ENGINEERS

National Society of Professional Engineers®

EJCDC® C-700, Standard General Conditions of the Construction Contract.
Copyright © 2013 National Society of Professional Engineers, American Council of Engineering Companies, and American Society of Civil Engineers. All rights reserved.

These General Conditions have been prepared for use with the Agreement Between Owner and Contractor for Construction Contract (EJCDC® C-520, Stipulated Sum, or C-525, Cost-Plus, 2013 Editions). Their provisions are interrelated and a change in one may necessitate a change in the other.

To prepare supplementary conditions that are coordinated with the General Conditions, use EJCDC's Guide to the Preparation of Supplementary Conditions (EJCDC® C-800, 2013 Edition). The full EJCDC Construction series of documents is discussed in the Commentary on the 2013 EJCDC Construction Documents (EJCDC® C-001, 2013 Edition).

Copyright ©
2013:

National Society of Professional
Engineers 1420 King Street, Alexandria,
VA 22314-2794 (703) 684-2882
www.nspe.org

American Council of Engineering
Companies 1015 15th Street N.W.,
Washington, DC 20005 (202) 347-7474
www.acec.org

American Society of Civil Engineers
1801 Alexander Bell Drive, Reston, VA
20191-4400 (800) 548-2723
www.asce.org

The copyright for this document is owned jointly by the three sponsoring organizations listed above. The National Society of Professional Engineers is the Copyright Administrator for the EJCDC documents; please direct all inquiries regarding EJCDC copyrights to NSPE.

NOTE: EJCDC publications may be purchased at www.ejcdc.org, or from any of the sponsoring organizations above.

Copyright © 2013 National Society of Professional Engineers, American Council of Engineering Companies, and American Society of Civil Engineers. All rights reserved.

STANDARD GENERAL CONDITIONS OF THE CONSTRUCTION CONTRACT

TABLE OF CONTENTS

Page

Article 1 – Definitions and Terminology 1

1.1 Defined Terms 1

1.2 Terminology 5

Article 2 – Preliminary Matters 6

2.1 Delivery of Bonds and Evidence of Insurance 6

2.2 Copies of Documents 6

2.3 Before Starting Construction 6

2.4 Preconstruction Conference; Designation of Authorized Representatives 7

2.5 Initial Acceptance of Schedules 7

2.6 Electronic Transmittals 7

Article 3 – Documents: Intent, Requirements, Reuse 8

3.1 Intent 8

3.2 Reference Standards 8

3.3 Reporting and Resolving Discrepancies 8

3.4 Requirements of the Contract Documents 9

3.5 Reuse of Documents 10

Article 4 – Commencement and Progress of the Work 10

4.1 Commencement of Contract Times; Notice to Proceed 10

4.2 Starting the Work 10

4.3 Reference Points 10

4.4 Progress Schedule 10

4.5 Delays in Contractor's Progress 11

Article 5 – Availability of Lands; Subsurface and Physical Conditions; Hazardous Environmental Conditions 12

5.1 Availability of Lands 12

5.2 Use of Site and Other Areas 12

5.3 Subsurface and Physical Conditions 13

5.4 Differing Subsurface or Physical Conditions 13

5.5 Underground Facilities 15

EJCDC® C-700, Standard General Conditions of the Construction Contract.
Copyright © 2013 National Society of Professional Engineers, American Council of Engineering Companies, and American Society of Civil Engineers. All rights reserved.

5.6 Hazardous Environmental Conditions at Site 16
Article 6 – Bonds and Insurance 18
6.1 Performance, Payment, and Other Bonds 18
6.2 Insurance—General Provisions 19
6.3 Contractor's Insurance 20
6.4 Owner's Liability Insurance 22
6.5 Property Insurance 22
6.6 Waiver of Rights 24
6.7 Receipt and Application of Property Insurance Proceeds 25
Article 7 – Contractor's Responsibilities 25
7.1 Supervision and Superintendence 25
7.2 Labor; Working Hours 26
7.3 Services, Materials, and Equipment 26
7.4 "Or Equals" 26
7.5 Substitutes 27
7.6 Concerning Subcontractors, Suppliers, and Others 29
7.7 Patent Fees and Royalties 30
7.8 Permits 31
7.9 Taxes 31
7.10 Laws and Regulations 31
7.11 Record Documents 32
7.12 Safety and Protection 32
7.13 Safety Representative 33
7.14 Hazard Communication Programs 33
7.15 Emergencies 33
7.16 Shop Drawings, Samples, and Other Submittals 33
7.17 Contractor's General Warranty and Guarantee 35
7.18 Indemnification 36
7.19 Delegation of Professional Design Services 37
Article 8 – Other Work at the Site 37
8.1 Other Work 37
8.2 Coordination 38

Copyright © 2013 National Society of Professional Engineers, American Council of Engineering Companies, and American Society of Civil Engineers. All rights reserved

8.3 Legal Relationships ... 38
Article 9 – Owner's Responsibilities ... 39
9.1 Communications to Contractor ... 39
9.2 Replacement of Engineer ... 39
9.3 Furnish Data ... 39
9.4 Pay When Due ... 39
9.5 Lands and Easements; Reports, Tests, and Drawings ... 39
9.6 Insurance ... 40
9.7 Change Orders ... 40
9.8 Inspections, Tests, and Approvals ... 40
9.9 Limitations on Owner's Responsibilities ... 40
9.10 Undisclosed Hazardous Environmental Condition ... 40
9.11 Evidence of Financial Arrangements ... 40
9.12 Safety Programs ... 40
Article 10 – Engineer's Status During Construction ... 40
10.1 Owner's Representative ... 40
10.2 Visits to Site ... 40
10.3 Project Representative ... 41
10.4 Rejecting Defective Work ... 41
10.5 Shop Drawings, Change Orders and Payments ... 41
10.6 Determinations for Unit Price Work ... 41
10.7 Decisions on Requirements of Contract Documents and Acceptability of Work ... 41
10.8 Limitations on Engineer's Authority and Responsibilities ... 41
10.9 Compliance with Safety Program ... 42
Article 11 – Amending the Contract Documents; Changes in the Work ... 42
11.1 Amending and Supplementing Contract Documents ... 42
11.2 Owner-Authorized Changes in the Work ... 43
11.3 Unauthorized Changes in the Work ... 43
11.4 Change of Contract Price ... 43
11.5 Change of Contract Times ... 44
11.6 Change Proposals ... 44
11.7 Execution of Change Orders ... 45
11.8 Notification to Surety ... 46

Copyright © 2013 National Society of Professional Engineers, American Council of Engineering Companies, and American Society of Civil Engineers. All rights reserved

Article 12 – Claims 46
12.01 Claims 46
Article 13 – Cost of the Work; Allowances; Unit Price Work 47
13.1 Cost of the Work 47
13.2 Allowances 49
13.3 Unit Price Work 50
Article 14 – Tests and Inspections; Correction, Removal or Acceptance of Defective Work 51
14.1 Access to Work 51
14.2 Tests, Inspections, and Approvals 51
14.3 Defective Work. 52
14.4 Acceptance of Defective Work 52
14.5 Uncovering Work 52
14.6 Owner May Stop the Work 53
14.7 Owner May Correct Defective Work 53
Article 15 – Payments to Contractor; Set-Offs; Completion; Correction Period 54
15.1 Progress Payments 54
15.2 Contractor's Warranty of Title 57
15.3 Substantial Completion 57
15.4 Partial Use or Occupancy 58
15.5 Final Inspection 58
15.6 Final Payment 58
15.7 Waiver of Claims 60
15.8 Correction Period 60
Article 16 – Suspension of Work and Termination 61
16.1 Owner May Suspend Work 61
16.2 Owner May Terminate for Cause 61
16.3 Owner May Terminate For Convenience 62
16.4 Contractor May Stop Work or Terminate 62
Article 17 – Final Resolution of Disputes 63
17.01 Methods and Procedures 63
Article 18 – Miscellaneous 63
18.1 Giving Notice 63
18.2 Computation of Times 63

Copyright © 2013 National Society of Professional Engineers, American Council of Engineering Companies, and American Society of Civil Engineers. All rights reserved

18.3 Cumulative Remedies 63
18.4 Limitation of Damages 64
18.5 No Waiver 64
18.6 Survival of Obligations 64
18.7 Controlling Law 64
18.8 Headings 64

Copyright © 2013 National Society of Professional Engineers, American Council of Engineering Companies, and American Society of Civil Engineers. All rights reserved

ARTICLE 1 – DEFINITIONS AND TERMINOLOGY

1.1 *Defined Terms*

A. Wherever used in the Bidding Requirements or Contract Documents, a term printed with initial capital letters, including the term's singular and plural forms, will have the meaning indicated in the definitions below. In addition to terms specifically defined, terms with initial capital letters in the Contract Documents include references to identified articles and paragraphs, and the titles of other documents or forms.

1. *Addenda*—Written or graphic instruments issued prior to the opening of Bids which clarify, correct, or change the Bidding Requirements or the proposed Contract Documents.

2. *Agreement*—The written instrument, executed by Owner and Contractor, that sets forth the Contract Price and Contract Times, identifies the parties and the Engineer, and designates the specific items that are Contract Documents.

3. *Application for Payment*—The form acceptable to Engineer which is to be used by Contractor during the course of the Work in requesting progress or final payments and which is to be accompanied by such supporting documentation as is required by the Contract Documents.

4. *Bid*—The offer of a Bidder submitted on the prescribed form setting forth the prices for the Work to be performed.

5. *Bidder*—An individual or entity that submits a Bid to Owner.

6. *Bidding Documents*—The Bidding Requirements, the proposed Contract Documents, and all Addenda.

7. *Bidding Requirements*—The advertisement or invitation to bid, Instructions to Bidders, Bid Bond or other Bid security, if any, the Bid Form, and the Bid with any attachments.

8. *Change Order*—A document which is signed by Contractor and Owner and authorizes an addition, deletion, or revision in the Work or an adjustment in the Contract Price or the Contract Times, or other revision to the Contract, issued on or after the Effective Date of the Contract.

9. *Change Proposal*—A written request by Contractor, duly submitted in compliance with the procedural requirements set forth herein, seeking an adjustment in Contract Price or Contract Times, or both; contesting an initial decision by Engineer concerning the requirements of the Contract Documents or the acceptability of Work under the Contract Documents; challenging a set-off against payments due; or seeking other relief with respect to the terms of the Contract.

10. *Claim*—(a) A demand or assertion by Owner directly to Contractor, duly submitted in compliance with the procedural requirements set forth herein: seeking an adjustment of Contract Price or Contract Times, or both; contesting an initial decision by Engineer concerning the requirements of the Contract

Copyright © 2013 National Society of Professional Engineers, American Council of Engineering Companies and American Society of Civil Engineers. All rights reserved.

Documents or the acceptability of Work under the Contract Documents; contesting Engineer's decision regarding a Change Proposal; seeking resolution of a contractual issue that Engineer has declined to address; or seeking other relief with respect to the terms of the Contract; or (b) a demand or assertion by Contractor directly to Owner, duly submitted in compliance with the procedural requirements set forth herein, contesting Engineer's decision regarding a Change Proposal; or seeking resolution of a contractual issue that Engineer has declined to address. A demand for money or services by a third party is not a Claim.

11. *Constituent of Concern*—Asbestos, petroleum, radioactive materials, polychlorinated biphenyls (PCBs), hazardous waste, and any substance, product, waste, or other material of any nature whatsoever that is or becomes listed, regulated, or addressed pursuant to (a) the Comprehensive Environmental Response, Compensation and Liability Act, 42 U.S.C. §§9601 et seq. ("CERCLA"); (b) the Hazardous Materials Transportation Act, 49 U.S.C. §§5501 et seq.; (c) the Resource Conservation and Recovery Act, 42 U.S.C. §§6901 et seq. ("RCRA"); (d) the Toxic Substances Control Act, 15 U.S.C. §§2601 et seq.; (e) the Clean Water Act, 33 U.S.C. §§1251 et seq.; (f) the Clean Air Act, 42 U.S.C. §§7401 et seq.; or (g) any other federal, state, or local statute, law, rule, regulation, ordinance, resolution, code, order, or decree regulating, relating to, or imposing liability or standards of conduct concerning, any hazardous, toxic, or dangerous waste, substance, or material.

12. *Contract*—The entire and integrated written contract between the Owner and Contractor concerning the Work.

13. *Contract Documents*—Those items so designated in the Agreement, and which together comprise the Contract.

14. *Contract Price*—The money that Owner has agreed to pay Contractor for completion of the Work in accordance with the Contract Documents. .

15. *Contract Times*—The number of days or the dates by which Contractor shall: (a) achieve Milestones, if any; (b) achieve Substantial Completion; and (c) complete the Work.

16. *Contractor*—The individual or entity with which Owner has contracted for performance of the Work.

17. *Cost of the Work*—See Paragraph 13.01 for definition.

18. *Drawings*—The part of the Contract that graphically shows the scope, extent, and character of the Work to be performed by Contractor.

19. *Effective Date of the Contract*—The date, indicated in the Agreement, on which the Contract becomes effective.

20. *Engineer*—The individual or entity named as such in the Agreement.

21. *Field Order*—A written order issued by Engineer which requires minor changes in the Work but does not change the Contract Price or the Contract Times.

22. *Hazardous Environmental Condition*—The presence at the Site of Constituents

Copyright © 2013 National Society of Professional Engineers, American Council of Engineering Companies and American Society of Civil Engineers. All rights reserved.

of Concern in such quantities or circumstances that may present a danger to persons or property exposed thereto. The presence at the Site of materials that are necessary for the execution of the Work, or that are to be incorporated in the Work, and that are controlled and contained pursuant to industry practices, Laws and Regulations, and the requirements of the Contract, does not establish a Hazardous Environmental Condition.

23. *Laws and Regulations; Laws or Regulations*—Any and all applicable laws, statutes, rules, regulations, ordinances, codes, and orders of any and all governmental bodies, agencies, authorities, and courts having jurisdiction.

24. *Liens*—Charges, security interests, or encumbrances upon Contract-related funds, real property, or personal property.

25. *Milestone*—A principal event in the performance of the Work that the Contract requires Contractor to achieve by an intermediate completion date or by a time prior to Substantial Completion of all the Work.

26. *Notice of Award*—The written notice by Owner to a Bidder of Owner's acceptance of the Bid.

27. *Notice to Proceed*—A written notice by Owner to Contractor fixing the date on which the Contract Times will commence to run and on which Contractor shall start to perform the Work.

28. *Owner*—The individual or entity with which Contractor has contracted regarding the Work, and which has agreed to pay Contractor for the performance of the Work, pursuant to the terms of the Contract.

29. *Progress Schedule*—A schedule, prepared and maintained by Contractor, describing the sequence and duration of the activities comprising the Contractor's plan to accomplish the Work within the Contract Times.

30. *Project*—The total undertaking to be accomplished for Owner by engineers, contractors, and others, including planning, study, design, construction, testing, commissioning, and start-up, and of which the Work to be performed under the Contract Documents is a part.

31. *Project Manual*—The written documents prepared for, or made available for, procuring and constructing the Work, including but not limited to the Bidding Documents or other construction procurement documents, geotechnical and existing conditions information, the Agreement, bond forms, General Conditions, Supplementary Conditions, and Specifications. The contents of the Project Manual may be bound in one or more volumes.

32. *Resident Project Representative*—The authorized representative of Engineer assigned to assist Engineer at the Site. As used herein, the term Resident Project Representative or "RPR" includes any assistants or field staff of Resident Project Representative.

33. *Samples*—Physical examples of materials, equipment, or workmanship that are representative of some portion of the Work and that establish the standards by which such portion of the Work will be judged.

EJCDC® C-700, Standard General Conditions of the Construction Contract.
Copyright © 2013 National Society of Professional Engineers, American Council of Engineering Companies and American Society of Civil Engineers. All rights reserved.

34. *Schedule of Submittals*—A schedule, prepared and maintained by Contractor, of required submittals and the time requirements for Engineer's review of the submittals and the performance of related construction activities.

35. *Schedule of Values*—A schedule, prepared and maintained by Contractor, allocating portions of the Contract Price to various portions of the Work and used as the basis for reviewing Contractor's Applications for Payment.

36. *Shop Drawings*—All drawings, diagrams, illustrations, schedules, and other data or information that are specifically prepared or assembled by or for Contractor and submitted by Contractor to illustrate some portion of the Work. Shop Drawings, whether approved or not, are not Drawings and are not Contract Documents.

37. *Site*—Lands or areas indicated in the Contract Documents as being furnished by Owner upon which the Work is to be performed, including rights-of-way and easements, and such other lands furnished by Owner which are designated for the use of Contractor.

38. *Specifications*—The part of the Contract that consists of written requirements for materials, equipment, systems, standards, and workmanship as applied to the Work, and certain administrative requirements and procedural matters applicable to the Work.

39. *Subcontractor*—An individual or entity having a direct contract with Contractor or with any other Subcontractor for the performance of a part of the Work.

40. *Substantial Completion*—The time at which the Work (or a specified part thereof) has progressed to the point where, in the opinion of Engineer, the Work (or a specified part thereof) is sufficiently complete, in accordance with the Contract Documents, so that the Work (or a specified part thereof) can be utilized for the purposes for which it is intended. The terms "substantially complete" and "substantially completed" as applied to all or part of the Work refer to Substantial Completion thereof.

41. *Successful Bidder*—The Bidder whose Bid the Owner accepts, and to which the Owner makes an award of contract, subject to stated conditions.

42. *Supplementary Conditions*—The part of the Contract that amends or supplements these General Conditions.

43. *Supplier*—A manufacturer, fabricator, supplier, distributor, materialman, or vendor having a direct contract with Contractor or with any Subcontractor to furnish materials or equipment to be incorporated in the Work by Contractor or a Subcontractor.

44. *Technical Data*—Those items expressly identified as Technical Data in the Supplementary Conditions, with respect to either (a) subsurface conditions at the Site, or physical conditions relating to existing surface or subsurface structures at the Site (except Underground Facilities) or (b) Hazardous Environmental Conditions at the Site. If no such express identifications of Technical Data have been made with respect to conditions at the Site, then the data contained in boring logs, recorded measurements of subsurface water levels, laboratory test

Copyright © 2013 National Society of Professional Engineers, American Council of Engineering Companies and American Society of Civil Engineers. All rights reserved.

results, and other factual, objective information regarding conditions at the Site that are set forth in any geotechnical or environmental report prepared for the Project and made available to Contractor are hereby defined as Technical Data with respect to conditions at the Site under Paragraphs 5.03, 5.04, and 5.06.

45. *Underground Facilities*—All underground pipelines, conduits, ducts, cables, wires, manholes, vaults, tanks, tunnels, or other such facilities or attachments, and any encasements containing such facilities, including but not limited to those that convey electricity, gases, steam, liquid petroleum products, telephone or other communications, fiber optic transmissions, cable television, water, wastewater, storm water, other liquids or chemicals, or traffic or other control systems.

46. *Unit Price Work*—Work to be paid for on the basis of unit prices.

47. *Work*—The entire construction or the various separately identifiable parts thereof required to be provided under the Contract Documents. Work includes and is the result of performing or providing all labor, services, and documentation necessary to produce such construction; furnishing, installing, and incorporating all materials and equipment into such construction; and may include related services such as testing, start-up, and commissioning, all as required by the Contract Documents.

48. *Work Change Directive*—A written directive to Contractor issued on or after the Effective Date of the Contract, signed by Owner and recommended by Engineer, ordering an addition, deletion, or revision in the Work.

1.2 *Terminology*

A. The words and terms discussed in the following paragraphs are not defined but, when used in the Bidding Requirements or Contract Documents, have the indicated meaning.

B. *Intent of Certain Terms or Adjectives*:

1. The Contract Documents include the terms "as allowed," "as approved," "as ordered," "as directed" or terms of like effect or import to authorize an exercise of professional judgment by Engineer. In addition, the adjectives "reasonable," "suitable," "acceptable," "proper," "satisfactory," or adjectives of like effect or import are used to describe an action or determination of Engineer as to the Work. It is intended that such exercise of professional judgment, action, or determination will be solely to evaluate, in general, the Work for compliance with the information in the Contract Documents and with the design concept of the Project as a functioning whole as shown or indicated in the Contract Documents (unless there is a specific statement indicating otherwise). The use of any such term or adjective is not intended to and shall not be effective to assign to Engineer any duty or authority to supervise or direct the performance of the Work, or any duty or authority to undertake responsibility contrary to the provisions of Article 10 or any other provision of the Contract Documents.

C. *Day*:

1. The word "day" means a calendar day of 24 hours measured from midnight to the

Copyright © 2013 National Society of Professional Engineers, American Council of Engineering Companies and American Society of Civil Engineers. All rights reserved.

next midnight.

D. *Defective*:

1. The word "defective," when modifying the word "Work," refers to Work that is unsatisfactory, faulty, or deficient in that it:

   a. does not conform to the Contract Documents; or

   b. does not meet the requirements of any applicable inspection, reference standard, test, or approval referred to in the Contract Documents; or

   c. has been damaged prior to Engineer's recommendation of final payment (unless responsibility for the protection thereof has been assumed by Owner at Substantial Completion in accordance with Paragraph 15.03 or 15.04).

E. *Furnish, Install, Perform, Provide*:

1. The word "furnish," when used in connection with services, materials, or equipment, shall mean to supply and deliver said services, materials, or equipment to the Site (or some other specified location) ready for use or installation and in usable or operable condition.

2. The word "install," when used in connection with services, materials, or equipment, shall mean to put into use or place in final position said services, materials, or equipment complete and ready for intended use.

3. The words "perform" or "provide," when used in connection with services, materials, or equipment, shall mean to furnish and install said services, materials, or equipment complete and ready for intended use.

4. If the Contract Documents establish an obligation of Contractor with respect to specific services, materials, or equipment, but do not expressly use any of the four words "furnish," "install," "perform," or "provide," then Contractor shall furnish and install said services, materials, or equipment complete and ready for intended use.

F. Unless stated otherwise in the Contract Documents, words or phrases that have a well- known technical or construction industry or trade meaning are used in the Contract Documents in accordance with such recognized meaning.

ARTICLE 2 – PRELIMINARY MATTERS

2.1 *Delivery of Bonds and Evidence of Insurance*

A. *Bonds*: When Contractor delivers the executed counterparts of the Agreement to Owner, Contractor shall also deliver to Owner such bonds as Contractor may be required to furnish.

B. *Evidence of Contractor's Insurance*: When Contractor delivers the executed counterparts of the Agreement to Owner, Contractor shall also deliver to Owner, with copies to each named insured and additional insured (as identified in the Supplementary Conditions or elsewhere in the Contract), the certificates and other evidence of insurance required to be provided by Contractor in accordance with

EJCDC® C-700, Standard General Conditions of the Construction Contract.
Copyright © 2013 National Society of Professional Engineers, American Council of Engineering Companies and American Society of Civil Engineers. All rights reserved.

Article 6.

C. *Evidence of Owner's Insurance*: After receipt of the executed counterparts of the Agreement and all required bonds and insurance documentation, Owner shall promptly deliver to Contractor, with copies to each named insured and additional insured (as identified in the Supplementary Conditions or otherwise), the certificates and other evidence of insurance required to be provided by Owner under Article 6.

2.2 *Copies of Documents*

A. Owner shall furnish to Contractor four printed copies of the Contract (including one fully executed counterpart of the Agreement), and one copy in electronic portable document format (PDF). Additional printed copies will be furnished upon request at the cost of reproduction.

B. Owner shall maintain and safeguard at least one original printed record version of the Contract, including Drawings and Specifications signed and sealed by Engineer and other design professionals. Owner shall make such original printed record version of the Contract available to Contractor for review. Owner may delegate the responsibilities under this provision to Engineer.

2.3 *Before Starting Construction*

A. *Preliminary Schedules*: Within 10 days after the Effective Date of the Contract (or as otherwise specifically required by the Contract Documents), Contractor shall submit to Engineer for timely review:

1. a preliminary Progress Schedule indicating the times (numbers of days or dates) for starting and completing the various stages of the Work, including any Milestones specified in the Contract;

2. a preliminary Schedule of Submittals; and

3. a preliminary Schedule of Values for all of the Work which includes quantities and prices of items which when added together equal the Contract Price and subdivides the Work into component parts in sufficient detail to serve as the basis for progress payments during performance of the Work. Such prices will include an appropriate amount of overhead and profit applicable to each item of Work.

2.4 *Preconstruction Conference; Designation of Authorized Representatives*

A. Before any Work at the Site is started, a conference attended by Owner, Contractor, Engineer, and others as appropriate will be held to establish a working understanding among the parties as to the Work and to discuss the schedules referred to in Paragraph 2.03.A, procedures for handling Shop Drawings, Samples, and other submittals, processing Applications for Payment, electronic or digital transmittals, and maintaining required records.

B. At this conference Owner and Contractor each shall designate, in writing, a specific individual to act as its authorized representative with respect to the services and responsibilities under the Contract. Such individuals shall have the authority to transmit and receive information, render decisions relative to the Contract, and otherwise act on behalf of each respective party.

Copyright © 2013 National Society of Professional Engineers, American Council of Engineering Companies and American Society of Civil Engineers. All rights reserved.

2.5 *Initial Acceptance of Schedules*

A. At least 10 days before submission of the first Application for Payment a conference, attended by Contractor, Engineer, and others as appropriate, will be held to review for acceptability to Engineer as provided below the schedules submitted in accordance with Paragraph 2.03.A. Contractor shall have an additional 10 days to make corrections and adjustments and to complete and resubmit the schedules. No progress payment shall be made to Contractor until acceptable schedules are submitted to Engineer.

1. The Progress Schedule will be acceptable to Engineer if it provides an orderly progression of the Work to completion within the Contract Times. Such acceptance will not impose on Engineer responsibility for the Progress Schedule, for sequencing, scheduling, or progress of the Work, nor interfere with or relieve Contractor from Contractor's full responsibility therefor.

2. Contractor's Schedule of Submittals will be acceptable to Engineer if it provides a workable arrangement for reviewing and processing the required submittals.

3. Contractor's Schedule of Values will be acceptable to Engineer as to form and substance if it provides a reasonable allocation of the Contract Price to the component parts of the Work.

2.6 *Electronic Transmittals*

A. Except as otherwise stated elsewhere in the Contract, the Owner, Engineer, and Contractor may transmit, and shall accept, Project-related correspondence, text, data, documents, drawings, information, and graphics, including but not limited to Shop Drawings and other submittals, in electronic media or digital format, either directly, or through access to a secure Project website.

B. If the Contract does not establish protocols for electronic or digital transmittals, then Owner, Engineer, and Contractor shall jointly develop such protocols.

C. When transmitting items in electronic media or digital format, the transmitting party makes no representations as to long term compatibility, usability, or readability of the items resulting from the recipient's use of software application packages, operating systems, or computer hardware differing from those used in the drafting or transmittal of the items, or from those established in applicable transmittal protocols.

ARTICLE 3 – DOCUMENTS: INTENT, REQUIREMENTS, REUSE

3.1 *Intent*

A. The Contract Documents are complementary; what is required by one is as binding as if required by all.

B. It is the intent of the Contract Documents to describe a functionally complete project (or part thereof) to be constructed in accordance with the Contract Documents.

C. Unless otherwise stated in the Contract Documents, if there is a discrepancy between the electronic or digital versions of the Contract Documents (including any printed

EJCDC® C-700, Standard General Conditions of the Construction Contract.
Copyright © 2013 National Society of Professional Engineers, American Council of Engineering Companies and American Society of Civil Engineers. All rights reserved.

copies derived from such electronic or digital versions) and the printed record version, the printed record version shall govern.

D. The Contract supersedes prior negotiations, representations, and agreements, whether written or oral.

E. Engineer will issue clarifications and interpretations of the Contract Documents as provided herein.

3.2 *Reference Standards*

A. Standards Specifications, Codes, Laws and Regulations

1. Reference in the Contract Documents to standard specifications, manuals, reference standards, or codes of any technical society, organization, or association, or to Laws or Regulations, whether such reference be specific or by implication, shall mean the standard specification, manual, reference standard, code, or Laws or Regulations in effect at the time of opening of Bids (or on the Effective Date of the Contract if there were no Bids), except as may be otherwise specifically stated in the Contract Documents.

2. No provision of any such standard specification, manual, reference standard, or code, or any instruction of a Supplier, shall be effective to change the duties or responsibilities of Owner, Contractor, or Engineer, or any of their subcontractors, consultants, agents, or employees, from those set forth in the part of the Contract Documents prepared by or for Engineer. No such provision or instruction shall be effective to assign to Owner, Engineer, or any of their officers, directors, members, partners, employees, agents, consultants, or subcontractors, any duty or authority to supervise or direct the performance of the Work or any duty or authority to undertake responsibility inconsistent with the provisions of the part of the Contract Documents prepared by or for Engineer.

3.3 *Reporting and Resolving Discrepancies*

A. *Reporting Discrepancies*:

1. *Contractor's Verification of Figures and Field Measurements*: Before undertaking each part of the Work, Contractor shall carefully study the Contract Documents, and check and verify pertinent figures and dimensions therein, particularly with respect to applicable field measurements. Contractor shall promptly report in writing to Engineer any conflict, error, ambiguity, or discrepancy that Contractor discovers, or has actual knowledge of, and shall not proceed with any Work affected thereby until the conflict, error, ambiguity, or discrepancy is resolved, by a clarification or interpretation by Engineer, or by an amendment or supplement to the Contract Documents issued pursuant to Paragraph 11.01.

2. *Contractor's Review of Contract Documents*: If, before or during the performance of the Work, Contractor discovers any conflict, error, ambiguity, or discrepancy within the Contract Documents, or between the Contract Documents and (a) any applicable Law or Regulation, (b) actual field conditions, (c) any standard specification, manual, reference standard, or code, or (d) any instruction of any Supplier, then Contractor shall promptly report it to

Copyright © 2013 National Society of Professional Engineers, American Council of Engineering Companies and American Society of Civil Engineers. All rights reserved.

Engineer in writing. Contractor shall not proceed with the Work affected thereby (except in an emergency as required by Paragraph 7.15) until the conflict, error, ambiguity, or discrepancy is resolved, by a clarification or interpretation by Engineer, or by an amendment or supplement to the Contract Documents issued pursuant to Paragraph 11.01.

3. Contractor shall not be liable to Owner or Engineer for failure to report any conflict, error, ambiguity, or discrepancy in the Contract Documents unless Contractor had actual knowledge thereof.

B. *Resolving Discrepancies*:

1. Except as may be otherwise specifically stated in the Contract Documents, the provisions of the part of the Contract Documents prepared by or for Engineer shall take precedence in resolving any conflict, error, ambiguity, or discrepancy between such provisions of the Contract Documents and:

a. the provisions of any standard specification, manual, reference standard, or code, or the instruction of any Supplier (whether or not specifically incorporated by reference as a Contract Document); or

b. the provisions of any Laws or Regulations applicable to the performance of the Work (unless such an interpretation of the provisions of the Contract Documents would result in violation of such Law or Regulation).

3.4 *Requirements of the Contract Documents*

A. During the performance of the Work and until final payment, Contractor and Owner shall submit to the Engineer all matters in question concerning the requirements of the Contract Documents (sometimes referred to as requests for information or interpretation—RFIs), or relating to the acceptability of the Work under the Contract Documents, as soon as possible after such matters arise. Engineer will be the initial interpreter of the requirements of the Contract Documents, and judge of the acceptability of the Work thereunder.

B. Engineer will, with reasonable promptness, render a written clarification, interpretation, or decision on the issue submitted, or initiate an amendment or supplement to the Contract Documents. Engineer's written clarification, interpretation, or decision will be final and binding on Contractor, unless it appeals by submitting a Change Proposal, and on Owner, unless it appeals by filing a Claim.

C. If a submitted matter in question concerns terms and conditions of the Contract Documents that do not involve (1) the performance or acceptability of the Work under the Contract Documents, (2) the design (as set forth in the Drawings, Specifications, or otherwise), or (3) other engineering or technical matters, then Engineer will promptly give written notice to Owner and Contractor that Engineer is unable to provide a decision or interpretation. If Owner and Contractor are unable to agree on resolution of such a matter in question, either party may pursue resolution as provided in Article 12.

3.5 *Reuse of Documents*

A. Contractor and its Subcontractors and Suppliers shall not:

EJCDC® C-700, Standard General Conditions of the Construction Contract.
Copyright © 2013 National Society of Professional Engineers, American Council of Engineering Companies and American Society of Civil Engineers. All rights reserved.

1. have or acquire any title to or ownership rights in any of the Drawings, Specifications, or other documents (or copies of any thereof) prepared by or bearing the seal of Engineer or its consultants, including electronic media editions, or reuse any such Drawings, Specifications, other documents, or copies thereof on extensions of the Project or any other project without written consent of Owner and Engineer and specific written verification or adaptation by Engineer; or

2. have or acquire any title or ownership rights in any other Contract Documents, reuse any such Contract Documents for any purpose without Owner's express written consent, or violate any copyrights pertaining to such Contract Documents.

B. The prohibitions of this Paragraph 3.05 will survive final payment, or termination of the Contract. Nothing herein shall preclude Contractor from retaining copies of the Contract Documents for record purposes.

ARTICLE 4 – COMMENCEMENT AND PROGRESS OF THE WORK

4.1 *Commencement of Contract Times; Notice to Proceed*

A. The Contract Times will commence to run on the thirtieth day after the Effective Date of the Contract or, if a Notice to Proceed is given, on the day indicated in the Notice to Proceed. A Notice to Proceed may be given at any time within 30 days after the Effective Date of the Contract. In no event will the Contract Times commence to run later than the sixtieth day after the day of Bid opening or the thirtieth day after the Effective Date of the Contract, whichever date is earlier.

4.2 *Starting the Work*

A. Contractor shall start to perform the Work on the date when the Contract Times commence to run. No Work shall be done at the Site prior to such date.

4.3 *Reference Points*

A. Owner shall provide engineering surveys to establish reference points for construction which in Engineer's judgment are necessary to enable Contractor to proceed with the Work. Contractor shall be responsible for laying out the Work, shall protect and preserve the established reference points and property monuments, and shall make no changes or relocations without the prior written approval of Owner. Contractor shall report to Engineer whenever any reference point or property monument is lost or destroyed or requires relocation because of necessary changes in grades or locations, and shall be responsible for the accurate replacement or relocation of such reference points or property monuments by professionally qualified personnel.

4.4 *Progress Schedule*

A. Contractor shall adhere to the Progress Schedule established in accordance with Paragraph
2.05 as it may be adjusted from time to time as provided below.

1. Contractor shall submit to Engineer for acceptance (to the extent indicated in

Copyright © 2013 National Society of Professional Engineers, American Council of Engineering Companies
and American Society of Civil Engineers. All rights reserved.

Paragraph 2.05) proposed adjustments in the Progress Schedule that will not result in changing the Contract Times.

2. Proposed adjustments in the Progress Schedule that will change the Contract Times shall be submitted in accordance with the requirements of Article 11.

B. Contractor shall carry on the Work and adhere to the Progress Schedule during all disputes or disagreements with Owner. No Work shall be delayed or postponed pending resolution of any disputes or disagreements, or during any appeal process, except as permitted by Paragraph 16.04, or as Owner and Contractor may otherwise agree in writing.

4.5 *Delays in Contractor's Progress*

A. If Owner, Engineer, or anyone for whom Owner is responsible, delays, disrupts, or interferes with the performance or progress of the Work, then Contractor shall be entitled to an equitable adjustment in the Contract Times and Contract Price. Contractor's entitlement to an adjustment of the Contract Times is conditioned on such adjustment being essential to Contractor's ability to complete the Work within the Contract Times.

B. Contractor shall not be entitled to an adjustment in Contract Price or Contract Times for delay, disruption, or interference caused by or within the control of Contractor. Delay, disruption, and interference attributable to and within the control of a Subcontractor or Supplier shall be deemed to be within the control of Contractor.

C. If Contractor's performance or progress is delayed, disrupted, or interfered with by unanticipated causes not the fault of and beyond the control of Owner, Contractor, and those for which they are responsible, then Contractor shall be entitled to an equitable adjustment in Contract Times. Contractor's entitlement to an adjustment of the Contract Times is conditioned on such adjustment being essential to Contractor's ability to complete the Work within the Contract Times. Such an adjustment shall be Contractor's sole and exclusive remedy for the delays, disruption, and interference described in this paragraph. Causes of delay, disruption, or interference that may give rise to an adjustment in Contract Times under this paragraph include but are not limited to the following:

1. severe and unavoidable natural catastrophes such as fires, floods, epidemics, and earthquakes;

2. abnormal weather conditions;

3. acts or failures to act of utility owners (other than those performing other work at or adjacent to the Site by arrangement with the Owner, as contemplated in Article 8); and

4. acts of war or terrorism.

D. Delays, disruption, and interference to the performance or progress of the Work resulting from the existence of a differing subsurface or physical condition, an Underground Facility that was not shown or indicated by the Contract Documents, or not shown or indicated with reasonable accuracy, and those resulting from Hazardous Environmental Conditions, are governed by Article 5.

EJCDC® C-700, Standard General Conditions of the Construction Contract.
Copyright © 2013 National Society of Professional Engineers, American Council of Engineering Companies and American Society of Civil Engineers. All rights reserved.

E. Paragraph 8.03 governs delays, disruption, and interference to the performance or progress of the Work resulting from the performance of certain other work at or adjacent to the Site.

F. Contractor shall not be entitled to an adjustment in Contract Price or Contract Times for any delay, disruption, or interference if such delay is concurrent with a delay, disruption, or interference caused by or within the control of Contractor.

G. Contractor must submit any Change Proposal seeking an adjustment in Contract Price or Contract Times under this paragraph within 30 days of the commencement of the delaying, disrupting, or interfering event.

ARTICLE 5 – AVAILABILITY OF LANDS; SUBSURFACE AND PHYSICAL CONDITIONS; HAZARDOUS ENVIRONMENTAL CONDITIONS

5.1 *Availability of Lands*

A. Owner shall furnish the Site. Owner shall notify Contractor of any encumbrances or restrictions not of general application but specifically related to use of the Site with which Contractor must comply in performing the Work.

B. Upon reasonable written request, Owner shall furnish Contractor with a current statement of record legal title and legal description of the lands upon which permanent improvements are to be made and Owner's interest therein as necessary for giving notice of or filing a mechanic's or construction lien against such lands in accordance with applicable Laws and Regulations.

C. Contractor shall provide for all additional lands and access thereto that may be required for temporary construction facilities or storage of materials and equipment.

5.2 *Use of Site and Other Areas*

A. *Limitation on Use of Site and Other Areas*:

1. Contractor shall confine construction equipment, temporary construction facilities, the storage of materials and equipment, and the operations of workers to the Site, adjacent areas that Contractor has arranged to use through construction easements or otherwise, and other adjacent areas permitted by Laws and Regulations, and shall not unreasonably encumber the Site and such other adjacent areas with construction equipment or other materials or equipment. Contractor shall assume full responsibility for (a) damage to the Site; (b) damage to any such other adjacent areas used for Contractor's operations; (c) damage to any other adjacent land or areas; and (d) for injuries and losses sustained by the owners or occupants of any such land or areas; provided that such damage or injuries result from the performance of the Work or from other actions or conduct of the Contractor or those for which Contractor is responsible.

2. If a damage or injury claim is made by the owner or occupant of any such land or area because of the performance of the Work, or because of other actions or conduct of the Contractor or those for which Contractor is responsible, Contractor shall (a) take immediate corrective or remedial action as required

Copyright © 2013 National Society of Professional Engineers, American Council of Engineering Companies and American Society of Civil Engineers. All rights reserved.

by Paragraph 7.12, or otherwise;
(b) promptly attempt to settle the claim as to all parties through negotiations with such owner or occupant, or otherwise resolve the claim by arbitration or other dispute resolution proceeding, or at law; and (c) to the fullest extent permitted by Laws and Regulations, indemnify and hold harmless Owner and Engineer, and the officers, directors, members, partners, employees, agents, consultants and subcontractors of each and any of them from and against any such claim, and against all costs, losses, and damages (including but not limited to all fees and charges of engineers, architects, attorneys, and other professionals and all court or arbitration or other dispute resolution costs) arising out of or relating to any claim or action, legal or equitable, brought by any such owner or occupant against Owner, Engineer, or any other party indemnified hereunder to the extent caused directly or indirectly, in whole or in part by, or based upon, Contractor's performance of the Work, or because of other actions or conduct of the Contractor or those for which Contractor is responsible.

B. *Removal of Debris During Performance of the Work*: During the progress of the Work the Contractor shall keep the Site and other adjacent areas free from accumulations of waste materials, rubbish, and other debris. Removal and disposal of such waste materials, rubbish, and other debris shall conform to applicable Laws and Regulations.

C. *Cleaning*: Prior to Substantial Completion of the Work Contractor shall clean the Site and the Work and make it ready for utilization by Owner. At the completion of the Work Contractor shall remove from the Site and adjacent areas all tools, appliances, construction equipment and machinery, and surplus materials and shall restore to original condition all property not designated for alteration by the Contract Documents.

D. *Loading of Structures*: Contractor shall not load nor permit any part of any structure to be loaded in any manner that will endanger the structure, nor shall Contractor subject any part of the Work or adjacent structures or land to stresses or pressures that will endanger them.

5.3 *Subsurface and Physical Conditions*

A. *Reports and Drawings*: The Supplementary Conditions identify:

1. those reports known to Owner of explorations and tests of subsurface conditions at or adjacent to the Site;

2. those drawings known to Owner of physical conditions relating to existing surface or subsurface structures at the Site (except Underground Facilities); and

3. Technical Data contained in such reports and drawings.

B. *Reliance by Contractor on Technical Data Authorized*: Contractor may rely upon the accuracy of the Technical Data expressly identified in the Supplementary Conditions with respect to such reports and drawings, but such reports and drawings are not Contract Documents. If no such express identification has been made, then Contractor may rely upon the accuracy of the Technical Data (as defined in Article

EJCDC® C-700, Standard General Conditions of the Construction Contract.
Copyright © 2013 National Society of Professional Engineers, American Council of Engineering Companies and American Society of Civil Engineers. All rights reserved.

1) contained in any geotechnical or environmental report prepared for the Project and made available to Contractor. Except for such reliance on Technical Data, Contractor may not rely upon or make any claim against Owner or Engineer, or any of their officers, directors, members, partners, employees, agents, consultants, or subcontractors, with respect to:

1. the completeness of such reports and drawings for Contractor's purposes, including, but not limited to, any aspects of the means, methods, techniques, sequences, and procedures of construction to be employed by Contractor, and safety precautions and programs incident thereto; or
2. other data, interpretations, opinions, and information contained in such reports or shown or indicated in such drawings; or
3. any Contractor interpretation of or conclusion drawn from any Technical Data or any such other data, interpretations, opinions, or information.

5.4 *Differing Subsurface or Physical Conditions*

A. *Notice by Contractor*: If Contractor believes that any subsurface or physical condition that is uncovered or revealed at the Site either:

1. is of such a nature as to establish that any Technical Data on which Contractor is entitled to rely as provided in Paragraph 5.03 is materially inaccurate; or
2. is of such a nature as to require a change in the Drawings or Specifications; or
3. differs materially from that shown or indicated in the Contract Documents; or
4. is of an unusual nature, and differs materially from conditions ordinarily encountered and generally recognized as inherent in work of the character provided for in the Contract Documents;

then Contractor shall, promptly after becoming aware thereof and before further disturbing the subsurface or physical conditions or performing any Work in connection therewith (except in an emergency as required by Paragraph 7.15), notify Owner and Engineer in writing about such condition. Contractor shall not further disturb such condition or perform any Work in connection therewith (except with respect to an emergency) until receipt of a written statement permitting Contractor to do so.

B. *Engineer's Review*: After receipt of written notice as required by the preceding paragraph, Engineer will promptly review the subsurface or physical condition in question; determine the necessity of Owner's obtaining additional exploration or tests with respect to the condition; conclude whether the condition falls within any one or more of the differing site condition categories in Paragraph 5.04.A above; obtain any pertinent cost or schedule information from Contractor; prepare recommendations to Owner regarding the Contractor's resumption of Work in connection with the subsurface or physical condition in question and the need for any change in the Drawings or Specifications; and advise Owner in writing of Engineer's findings, conclusions, and recommendations.

C. *Owner's Statement to Contractor Regarding Site Condition*: After receipt of Engineer's written findings, conclusions, and recommendations, Owner shall issue a

EJCDC® C-700, Standard General Conditions of the Construction Contract.
Copyright © 2013 National Society of Professional Engineers, American Council of Engineering Companies and American Society of Civil Engineers. All rights reserved.

written statement to Contractor (with a copy to Engineer) regarding the subsurface or physical condition in question, addressing the resumption of Work in connection with such condition, indicating whether any change in the Drawings or Specifications will be made, and adopting or rejecting Engineer's written findings, conclusions, and recommendations, in whole or in part.

D. *Possible Price and Times Adjustments*:

1. Contractor shall be entitled to an equitable adjustment in Contract Price or Contract Times, or both, to the extent that the existence of a differing subsurface or physical condition, or any related delay, disruption, or interference, causes an increase or decrease in Contractor's cost of, or time required for, performance of the Work; subject, however, to the following:

   a. such condition must fall within any one or more of the categories described in Paragraph 5.04.A;

   b. with respect to Work that is paid for on a unit price basis, any adjustment in Contract Price will be subject to the provisions of Paragraph 13.03; and,

   c. Contractor's entitlement to an adjustment of the Contract Times is conditioned on such adjustment being essential to Contractor's ability to complete the Work within the Contract Times.

2. Contractor shall not be entitled to any adjustment in the Contract Price or Contract Times with respect to a subsurface or physical condition if:

   a. Contractor knew of the existence of such condition at the time Contractor made a commitment to Owner with respect to Contract Price and Contract Times by the submission of a Bid or becoming bound under a negotiated contract, or otherwise; or

   b. the existence of such condition reasonably could have been discovered or revealed as a result of any examination, investigation, exploration, test, or study of the Site and contiguous areas expressly required by the Bidding Requirements or Contract Documents to be conducted by or for Contractor prior to Contractor's making such commitment; or

   c. Contractor failed to give the written notice as required by Paragraph 5.04.A.

3. If Owner and Contractor agree regarding Contractor's entitlement to and the amount or extent of any adjustment in the Contract Price or Contract Times, or both, then any such adjustment shall be set forth in a Change Order.

4. Contractor may submit a Change Proposal regarding its entitlement to or the amount or extent of any adjustment in the Contract Price or Contract Times, or both, no later than
   30 days after Owner's issuance of the Owner's written statement to Contractor regarding the subsurface or physical condition in question.

5.5 *Underground Facilities*

A. *Contractor's Responsibilities*: The information and data shown or indicated in the Contract Documents with respect to existing Underground Facilities at or adjacent to

EJCDC® C-700, Standard General Conditions of the Construction Contract.
Copyright © 2013 National Society of Professional Engineers, American Council of Engineering Companies and American Society of Civil Engineers. All rights reserved.

the Site is based on information and data furnished to Owner or Engineer by the owners of such Underground Facilities, including Owner, or by others. Unless it is otherwise expressly provided in the Supplementary Conditions:

1. Owner and Engineer do not warrant or guarantee the accuracy or completeness of any such information or data provided by others; and
2. the cost of all of the following will be included in the Contract Price, and Contractor shall have full responsibility for:
   a. reviewing and checking all information and data regarding existing Underground Facilities at the Site;
   b. locating all Underground Facilities shown or indicated in the Contract Documents as being at the Site;
   c. coordination of the Work with the owners (including Owner) of such Underground Facilities, during construction; and
   d. the safety and protection of all existing Underground Facilities at the Site, and repairing any damage thereto resulting from the Work.

B. *Notice by Contractor*: If Contractor believes that an Underground Facility that is uncovered or revealed at the Site was not shown or indicated in the Contract Documents, or was not shown or indicated with reasonable accuracy, then Contractor shall, promptly after becoming aware thereof and before further disturbing conditions affected thereby or performing any Work in connection therewith (except in an emergency as required by Paragraph 7.15), identify the owner of such Underground Facility and give written notice to that owner and to Owner and Engineer.

C. *Engineer's Review*: Engineer will promptly review the Underground Facility and conclude whether such Underground Facility was not shown or indicated in the Contract Documents, or was not shown or indicated with reasonable accuracy; obtain any pertinent cost or schedule information from Contractor; prepare recommendations to Owner regarding the Contractor's resumption of Work in connection with the Underground Facility in question; determine the extent, if any, to which a change is required in the Drawings or Specifications to reflect and document the consequences of the existence or location of the Underground Facility; and advise Owner in writing of Engineer's findings, conclusions, and recommendations. During such time, Contractor shall be responsible for the safety and protection of such Underground Facility.

D. *Owner's Statement to Contractor Regarding Underground Facility*: After receipt of Engineer's written findings, conclusions, and recommendations, Owner shall issue a written statement to Contractor (with a copy to Engineer) regarding the Underground Facility in question, addressing the resumption of Work in connection with such Underground Facility, indicating whether any change in the Drawings or Specifications will be made, and adopting or rejecting Engineer's written findings, conclusions, and recommendations in whole or in part.

E. *Possible Price and Times Adjustments*:

EJCDC® C-700, Standard General Conditions of the Construction Contract.
Copyright © 2013 National Society of Professional Engineers, American Council of Engineering Companies and American Society of Civil Engineers. All rights reserved.

1. Contractor shall be entitled to an equitable adjustment in the Contract Price or Contract Times, or both, to the extent that any existing Underground Facility at the Site that was not shown or indicated in the Contract Documents, or was not shown or indicated with reasonable accuracy, or any related delay, disruption, or interference, causes an increase or decrease in Contractor's cost of, or time required for, performance of the Work; subject, however, to the following:

    a. Contractor did not know of and could not reasonably have been expected to be aware of or to have anticipated the existence or actual location of the Underground Facility in question;

    b. With respect to Work that is paid for on a unit price basis, any adjustment in Contract Price will be subject to the provisions of Paragraph 13.03;

    c. Contractor's entitlement to an adjustment of the Contract Times is conditioned on such adjustment being essential to Contractor's ability to complete the Work within the Contract Times; and

    d. Contractor gave the notice required in Paragraph 5.05.B.

2. If Owner and Contractor agree regarding Contractor's entitlement to and the amount or extent of any adjustment in the Contract Price or Contract Times, or both, then any such adjustment shall be set forth in a Change Order.

3. Contractor may submit a Change Proposal regarding its entitlement to or the amount or extent of any adjustment in the Contract Price or Contract Times, or both, no later than
30 days after Owner's issuance of the Owner's written statement to Contractor regarding the Underground Facility in question.

5.6 *Hazardous Environmental Conditions at Site*

A. *Reports and Drawings*: The Supplementary Conditions identify:

1. those reports and drawings known to Owner relating to Hazardous Environmental Conditions that have been identified at or adjacent to the Site; and

2. Technical Data contained in such reports and drawings.

B. *Reliance by Contractor on Technical Data Authorized*: Contractor may rely upon the accuracy of the Technical Data expressly identified in the Supplementary Conditions with respect to such reports and drawings, but such reports and drawings are not Contract Documents. If no such express identification has been made, then Contractor may rely on the accuracy of the Technical Data (as defined in Article 1) contained in any geotechnical or environmental report prepared for the Project and made available to Contractor. Except for such reliance on Technical Data, Contractor may not rely upon or make any claim against Owner or Engineer, or any of their officers, directors, members, partners, employees, agents, consultants, or subcontractors with respect to:

1. the completeness of such reports and drawings for Contractor's purposes, including, but not limited to, any aspects of the means, methods, techniques, sequences and procedures of construction to be employed by Contractor and safety precautions and programs incident thereto; or

Copyright © 2013 National Society of Professional Engineers, American Council of Engineering Companies and American Society of Civil Engineers. All rights reserved.

2. other data, interpretations, opinions and information contained in such reports or shown or indicated in such drawings; or

3. any Contractor interpretation of or conclusion drawn from any Technical Data or any such other data, interpretations, opinions or information.

C. Contractor shall not be responsible for removing or remediating any Hazardous Environmental Condition encountered, uncovered, or revealed at the Site unless such removal or remediation is expressly identified in the Contract Documents to be within the scope of the Work.

D. Contractor shall be responsible for controlling, containing, and duly removing all Constituents of Concern brought to the Site by Contractor, Subcontractors, Suppliers, or anyone else for whom Contractor is responsible, and for any associated costs; and for the costs of removing and remediating any Hazardous Environmental Condition created by the presence of any such Constituents of Concern.

E. If Contractor encounters, uncovers, or reveals a Hazardous Environmental Condition whose removal or remediation is not expressly identified in the Contract Documents as being within the scope of the Work, or if Contractor or anyone for whom Contractor is responsible creates a Hazardous Environmental Condition, then Contractor shall immediately: (1) secure or otherwise isolate such condition; (2) stop all Work in connection with such condition and in any area affected thereby (except in an emergency as required by Paragraph 7.15); and (3) notify Owner and Engineer (and promptly thereafter confirm such notice in writing). Owner shall promptly consult with Engineer concerning the necessity for Owner to retain a qualified expert to evaluate such condition or take corrective action, if any. Promptly after consulting with Engineer, Owner shall take such actions as are necessary to permit Owner to timely obtain required permits and provide Contractor the written notice required by Paragraph
5.06.F. If Contractor or anyone for whom Contractor is responsible created the Hazardous Environmental Condition in question, then Owner may remove and remediate the Hazardous Environmental Condition, and impose a set-off against payments to account for the associated costs.

F. Contractor shall not resume Work in connection with such Hazardous Environmental Condition or in any affected area until after Owner has obtained any required permits related thereto, and delivered written notice to Contractor either (1) specifying that such condition and any affected area is or has been rendered safe for the resumption of Work, or (2) specifying any special conditions under which such Work may be resumed safely.

G. If Owner and Contractor cannot agree as to entitlement to or on the amount or extent, if any, of any adjustment in Contract Price or Contract Times, or both, as a result of such Work stoppage or such special conditions under which Work is agreed to be resumed by Contractor, then within 30 days of Owner's written notice regarding the resumption of Work, Contractor may submit a Change Proposal, or Owner may impose a set-off.

H. If after receipt of such written notice Contractor does not agree to resume such Work based on a reasonable belief it is unsafe, or does not agree to resume such Work under

Copyright © 2013 National Society of Professional Engineers, American Council of Engineering Companies
and American Society of Civil Engineers. All rights reserved.

such special conditions, then Owner may order the portion of the Work that is in the area affected by such condition to be deleted from the Work, following the contractual change procedures in Article 11. Owner may have such deleted portion of the Work performed by Owner's own forces or others in accordance with Article 8.

I. To the fullest extent permitted by Laws and Regulations, Owner shall indemnify and hold harmless Contractor, Subcontractors, and Engineer, and the officers, directors, members, partners, employees, agents, consultants, and subcontractors of each and any of them from and against all claims, costs, losses, and damages (including but not limited to all fees and charges of engineers, architects, attorneys, and other professionals and all court or arbitration or other dispute resolution costs) arising out of or relating to a Hazardous Environmental Condition, provided that such Hazardous Environmental Condition (1) was not shown or indicated in the Drawings, Specifications, or other Contract Documents, identified as Technical Data entitled to limited reliance pursuant to Paragraph 5.06.B, or identified in the Contract Documents to be included within the scope of the Work, and (2) was not created by Contractor or by anyone for whom Contractor is responsible. Nothing in this Paragraph 5.06.H shall obligate Owner to indemnify any individual or entity from and against the consequences of that individual's or entity's own negligence.

J. To the fullest extent permitted by Laws and Regulations, Contractor shall indemnify and hold harmless Owner and Engineer, and the officers, directors, members, partners, employees, agents, consultants, and subcontractors of each and any of them from and against all claims, costs, losses, and damages (including but not limited to all fees and charges of engineers, architects, attorneys, and other professionals and all court or arbitration or other dispute resolution costs) arising out of or relating to the failure to control, contain, or remove a Constituent of Concern brought to the Site by Contractor or by anyone for whom Contractor is responsible, or to a Hazardous Environmental Condition created by Contractor or by anyone for whom Contractor is responsible. Nothing in this Paragraph 5.06.J shall obligate Contractor to indemnify any individual or entity from and against the consequences of that individual's or entity's own negligence.

K. The provisions of Paragraphs 5.03, 5.04, and 5.05 do not apply to the presence of Constituents of Concern or to a Hazardous Environmental Condition uncovered or revealed at the Site.

ARTICLE 6 – BONDS AND INSURANCE

6.1 *Performance, Payment, and Other Bonds*

A. Contractor shall furnish a performance bond and a payment bond, each in an amount at least equal to the Contract Price, as security for the faithful performance and payment of all of Contractor's obligations under the Contract. These bonds shall remain in effect until one year after the date when final payment becomes due or until completion of the correction period specified in Paragraph 15.08, whichever is later, except as provided otherwise by Laws or Regulations, the Supplementary Conditions, or other specific provisions of the Contract. Contractor shall also furnish such other bonds as are required by the Supplementary Conditions or other

Copyright © 2013 National Society of Professional Engineers, American Council of Engineering Companies and American Society of Civil Engineers. All rights reserved.

specific provisions of the Contract.

B. All bonds shall be in the form prescribed by the Contract except as provided otherwise by Laws or Regulations, and shall be executed by such sureties as are named in "Companies Holding Certificates of Authority as Acceptable Sureties on Federal Bonds and as Acceptable Reinsuring Companies" as published in Circular 570 (as amended and supplemented) by the Financial Management Service, Surety Bond Branch, U.S. Department of the Treasury. A bond signed by an agent or attorney-in-fact must be accompanied by a certified copy of that individual's authority to bind the surety. The evidence of authority shall show that it is effective on the date the agent or attorney-in-fact signed the accompanying bond.

C. Contractor shall obtain the required bonds from surety companies that are duly licensed or authorized in the jurisdiction in which the Project is located to issue bonds in the required amounts.

D. If the surety on a bond furnished by Contractor is declared bankrupt or becomes insolvent, or its right to do business is terminated in any state or jurisdiction where any part of the Project is located, or the surety ceases to meet the requirements above, then Contractor shall promptly notify Owner and Engineer and shall, within 20 days after the event giving rise to such notification, provide another bond and surety, both of which shall comply with the bond and surety requirements above.

E. If Contractor has failed to obtain a required bond, Owner may exclude the Contractor from the Site and exercise Owner's termination rights under Article 16.

F. Upon request, Owner shall provide a copy of the payment bond to any Subcontractor, Supplier, or other person or entity claiming to have furnished labor or materials used in the performance of the Work.

6.2 *Insurance—General Provisions*

A. Owner and Contractor shall obtain and maintain insurance as required in this Article and in the Supplementary Conditions.

B. All insurance required by the Contract to be purchased and maintained by Owner or Contractor shall be obtained from insurance companies that are duly licensed or authorized, in the state or jurisdiction in which the Project is located, to issue insurance policies for the required limits and coverages. Unless a different standard is indicated in the Supplementary Conditions, all companies that provide insurance policies required under this Contract shall have an A.M. Best rating of A-VII or better.

C. Contractor shall deliver to Owner, with copies to each named insured and additional insured (as identified in this Article, in the Supplementary Conditions, or elsewhere in the Contract), certificates of insurance establishing that Contractor has obtained and is maintaining the policies, coverages, and endorsements required by the Contract. Upon request by Owner or any other insured, Contractor shall also furnish other evidence of such required insurance, including but not limited to copies of policies and endorsements, and documentation of applicable self-insured retentions and deductibles. Contractor may block out (redact) any confidential premium or pricing information contained in any policy or endorsement furnished under this provision.

EJCDC® C-700, Standard General Conditions of the Construction Contract.
Copyright © 2013 National Society of Professional Engineers, American Council of Engineering Companies and American Society of Civil Engineers. All rights reserved.

D. Owner shall deliver to Contractor, with copies to each named insured and additional insured (as identified in this Article, the Supplementary Conditions, or elsewhere in the Contract), certificates of insurance establishing that Owner has obtained and is maintaining the policies, coverages, and endorsements required of Owner by the Contract (if any). Upon request by Contractor or any other insured, Owner shall also provide other evidence of such required insurance (if any), including but not limited to copies of policies and endorsements, and documentation of applicable self-insured retentions and deductibles. Owner may block out (redact) any confidential premium or pricing information contained in any policy or endorsement furnished under this provision.

E. Failure of Owner or Contractor to demand such certificates or other evidence of the other party's full compliance with these insurance requirements, or failure of Owner or Contractor to identify a deficiency in compliance from the evidence provided, shall not be construed as a waiver of the other party's obligation to obtain and maintain such insurance.

F. If either party does not purchase or maintain all of the insurance required of such party by the Contract, such party shall notify the other party in writing of such failure to purchase prior to the start of the Work, or of such failure to maintain prior to any change in the required coverage.

G. If Contractor has failed to obtain and maintain required insurance, Owner may exclude the Contractor from the Site, impose an appropriate set-off against payment, and exercise Owner's termination rights under Article 16.

H. Without prejudice to any other right or remedy, if a party has failed to obtain required insurance, the other party may elect to obtain equivalent insurance to protect such other party's interests at the expense of the party who was required to provide such coverage, and the Contract Price shall be adjusted accordingly.

I. Owner does not represent that insurance coverage and limits established in this Contract necessarily will be adequate to protect Contractor or Contractor's interests.

J. The insurance and insurance limits required herein shall not be deemed as a limitation on Contractor's liability under the indemnities granted to Owner and other individuals and entities in the Contract.

6.3 *Contractor's Insurance*

A. *Workers' Compensation*: Contractor shall purchase and maintain workers' compensation and employer's liability insurance for:

1. claims under workers' compensation, disability benefits, and other similar employee benefit acts.

2. United States Longshoreman and Harbor Workers' Compensation Act and Jones Act coverage (if applicable).

3. claims for damages because of bodily injury, occupational sickness or disease, or death of Contractor's employees (by stop-gap endorsement in monopolist worker's compensation states).

4. Foreign voluntary worker compensation (if applicable).

EJCDC® C-700, Standard General Conditions of the Construction Contract.
Copyright © 2013 National Society of Professional Engineers, American Council of Engineering Companies and American Society of Civil Engineers. All rights reserved.

B. *Commercial General Liability—Claims Covered*: Contractor shall purchase and maintain commercial general liability insurance, covering all operations by or on behalf of Contractor, on an occurrence basis, against:

1. claims for damages because of bodily injury, sickness or disease, or death of any person other than Contractor's employees.
2. claims for damages insured by reasonably available personal injury liability coverage.
3. claims for damages, other than to the Work itself, because of injury to or destruction of tangible property wherever located, including loss of use resulting therefrom.

C. *Commercial General Liability—Form and Content*: Contractor's commercial liability policy shall be written on a 1996 (or later) ISO commercial general liability form (occurrence form) and include the following coverages and endorsements:

1. Products and completed operations coverage:
   a. Such insurance shall be maintained for three years after final payment.
   b. Contractor shall furnish Owner and each other additional insured (as identified in the Supplementary Conditions or elsewhere in the Contract) evidence of continuation of such insurance at final payment and three years thereafter.
2. Blanket contractual liability coverage, to the extent permitted by law, including but not limited to coverage of Contractor's contractual indemnity obligations in Paragraph 7.18.
3. Broad form property damage coverage.
4. Severability of interest.
5. Underground, explosion, and collapse coverage.
6. Personal injury coverage.
7. Additional insured endorsements that include both ongoing operations and products and completed operations coverage through ISO Endorsements CG 20 10 10 01 and CG 20 37 10 01 (together); or CG 20 10 07 04 and CG 20 37 07 04 (together); or their equivalent.
8. For design professional additional insureds, ISO Endorsement CG 20 32 07 04, "Additional Insured—Engineers, Architects or Surveyors Not Engaged by the Named Insured" or its equivalent.

D. *Automobile liability*: Contractor shall purchase and maintain automobile liability insurance against claims for damages because of bodily injury or death of any person or property damage arising out of the ownership, maintenance, or use of any motor vehicle. The automobile liability policy shall be written on an occurrence basis.

E. *Umbrella or excess liability*: Contractor shall purchase and maintain umbrella or excess liability insurance written over the underlying employer's liability,

Copyright © 2013 National Society of Professional Engineers, American Council of Engineering Companies and American Society of Civil Engineers. All rights reserved.

commercial general liability, and automobile liability insurance described in the paragraphs above. Subject to industry-standard exclusions, the coverage afforded shall follow form as to each and every one of the underlying policies.

F. *Contractor's pollution liability insurance*: Contractor shall purchase and maintain a policy covering third-party injury and property damage claims, including clean-up costs, as a result of pollution conditions arising from Contractor's operations and completed operations. This insurance shall be maintained for no less than three years after final completion.

G. *Additional insureds*: The Contractor's commercial general liability, automobile liability, umbrella or excess, and pollution liability policies shall include and list as additional insureds Owner and Engineer, and any individuals or entities identified in the Supplementary Conditions; include coverage for the respective officers, directors, members, partners, employees, agents, consultants, and subcontractors of each and any of all such additional insureds; and the insurance afforded to these additional insureds shall provide primary coverage for all claims covered thereby (including as applicable those arising from both ongoing and completed operations) on a non-contributory basis. Contractor shall obtain all necessary endorsements to support these requirements.

H. *Contractor's professional liability insurance*: If Contractor will provide or furnish professional services under this Contract, through a delegation of professional design services or otherwise, then Contractor shall be responsible for purchasing and maintaining applicable professional liability insurance. This insurance shall provide protection against claims arising out of performance of professional design or related services, and caused by a negligent error, omission, or act for which the insured party is legally liable. It shall be maintained throughout the duration of the Contract and for a minimum of two years after Substantial Completion. If such professional design services are performed by a Subcontractor, and not by Contractor itself, then the requirements of this paragraph may be satisfied through the purchasing and maintenance of such insurance by such Subcontractor.

I. *General provisions*: The policies of insurance required by this Paragraph 6.03 shall:

1. include at least the specific coverages provided in this Article.
2. be written for not less than the limits of liability provided in this Article and in the Supplementary Conditions, or required by Laws or Regulations, whichever is greater.
3. contain a provision or endorsement that the coverage afforded will not be canceled, materially changed, or renewal refused until at least 10 days prior written notice has been given to Contractor. Within three days of receipt of any such written notice, Contractor shall provide a copy of the notice to Owner, Engineer, and each other insured under the policy.
4. remain in effect at least until final payment (and longer if expressly required in this Article) and at all times thereafter when Contractor may be correcting, removing, or replacing defective Work as a warranty or correction obligation, or otherwise, or returning to the Site to conduct other tasks arising from the

EJCDC® C-700, Standard General Conditions of the Construction Contract.
Copyright © 2013 National Society of Professional Engineers, American Council of Engineering Companies and American Society of Civil Engineers. All rights reserved.

Contract Documents.

5. be appropriate for the Work being performed and provide protection from claims that may arise out of or result from Contractor's performance of the Work and Contractor's other obligations under the Contract Documents, whether it is to be performed by Contractor, any Subcontractor or Supplier, or by anyone directly or indirectly employed by any of them to perform any of the Work, or by anyone for whose acts any of them may be liable.

J. The coverage requirements for specific policies of insurance must be met by such policies, and not by reference to excess or umbrella insurance provided in other policies.

6.4 *Owner's Liability Insurance*

A. In addition to the insurance required to be provided by Contractor under Paragraph 6.03, Owner, at Owner's option, may purchase and maintain at Owner's expense Owner's own liability insurance as will protect Owner against claims which may arise from operations under the Contract Documents.

B. Owner's liability policies, if any, operate separately and independently from policies required to be provided by Contractor, and Contractor cannot rely upon Owner's liability policies for any of Contractor's obligations to the Owner, Engineer, or third parties.

6.5 *Property Insurance*

A. *Builder's Risk*: Unless otherwise provided in the Supplementary Conditions, Contractor shall purchase and maintain builder's risk insurance upon the Work on a completed value basis, in the amount of the full insurable replacement cost thereof (subject to such deductible amounts as may be provided in the Supplementary Conditions or required by Laws and Regulations). This insurance shall:

1. include the Owner and Contractor as named insureds, and all Subcontractors, and any individuals or entities required by the Supplementary Conditions to be insured under such builder's risk policy, as insureds or named insureds. For purposes of the remainder of this Paragraph 6.05, Paragraphs 6.06 and 6.07, and any corresponding Supplementary Conditions, the parties required to be insured shall collectively be referred to as "insureds."

2. be written on a builder's risk "all risk" policy form that shall at least include insurance for physical loss or damage to the Work, temporary buildings, falsework, and materials and equipment in transit, and shall insure against at least the following perils or causes of loss: fire; lightning; windstorm; riot; civil commotion; terrorism; vehicle impact; aircraft; smoke; theft; vandalism and malicious mischief; mechanical breakdown, boiler explosion, and artificially generated electric current; earthquake; volcanic activity, and other earth movement; flood; collapse; explosion; debris removal; demolition occasioned by enforcement of Laws and Regulations; water damage (other than that caused by flood); and such other perils or causes of loss as may be specifically required by the Supplementary Conditions. If insurance against mechanical breakdown, boiler explosion, and artificially generated electric current; earthquake; volcanic

EJCDC® C-700, Standard General Conditions of the Construction Contract.
Copyright © 2013 National Society of Professional Engineers, American Council of Engineering Companies and American Society of Civil Engineers. All rights reserved.

activity, and other earth movement; or flood, are not commercially available under builder's risk policies, by endorsement or otherwise, such insurance may be provided through other insurance policies acceptable to Owner and Contractor.

3. cover, as insured property, at least the following: (a) the Work and all materials, supplies, machinery, apparatus, equipment, fixtures, and other property of a similar nature that are to be incorporated into or used in the preparation, fabrication, construction, erection, or completion of the Work, including Owner-furnished or assigned property; (b) spare parts inventory required within the scope of the Contract; and (c) temporary works which are not intended to form part of the permanent constructed Work but which are intended to provide working access to the Site, or to the Work under construction, or which are intended to provide temporary support for the Work under construction, including scaffolding, form work, fences, shoring, falsework, and temporary structures.
4. cover expenses incurred in the repair or replacement of any insured property (including but not limited to fees and charges of engineers and architects).
5. extend to cover damage or loss to insured property while in temporary storage at the Site or in a storage location outside the Site (but not including property stored at the premises of a manufacturer or Supplier).
6. extend to cover damage or loss to insured property while in transit.
7. allow for partial occupation or use of the Work by Owner, such that those portions of the Work that are not yet occupied or used by Owner shall remain covered by the builder's risk insurance.
8. allow for the waiver of the insurer's subrogation rights, as set forth below.
9. provide primary coverage for all losses and damages caused by the perils or causes of loss covered.
10. not include a co-insurance clause.
11. include an exception for ensuing losses from physical damage or loss with respect to any defective workmanship, design, or materials exclusions.
12. include performance/hot testing and start-up.
13. be maintained in effect, subject to the provisions herein regarding Substantial Completion and partial occupancy or use of the Work by Owner, until the Work is complete.

B. *Notice of Cancellation or Change*: All the policies of insurance (and the certificates or other evidence thereof) required to be purchased and maintained in accordance with this Paragraph 6.05 will contain a provision or endorsement that the coverage afforded will not be canceled or materially changed or renewal refused until at least 10 days prior written notice has been given to the purchasing policyholder. Within three days of receipt of any such written notice, the purchasing policyholder shall provide a copy of the notice to each other insured.

EJCDC® C-700, Standard General Conditions of the Construction Contract.
Copyright © 2013 National Society of Professional Engineers, American Council of Engineering Companies and American Society of Civil Engineers. All rights reserved.

C. *Deductibles*: The purchaser of any required builder's risk or property insurance shall pay for costs not covered because of the application of a policy deductible.

D. *Partial Occupancy or Use by Owner*: If Owner will occupy or use a portion or portions of the Work prior to Substantial Completion of all the Work as provided in Paragraph 15.04, then Owner (directly, if it is the purchaser of the builder's risk policy, or through Contractor) will provide notice of such occupancy or use to the builder's risk insurer. The builder's risk insurance shall not be canceled or permitted to lapse on account of any such partial use or occupancy; rather, those portions of the Work that are occupied or used by Owner may come off the builder's risk policy, while those portions of the Work not yet occupied or used by Owner shall remain covered by the builder's risk insurance.

E. *Additional Insurance*: If Contractor elects to obtain other special insurance to be included in or supplement the builder's risk or property insurance policies provided under this Paragraph 6.05, it may do so at Contractor's expense.

F. *Insurance of Other Property*: If the express insurance provisions of the Contract do not require or address the insurance of a property item or interest, such as tools, construction equipment, or other personal property owned by Contractor, a Subcontractor, or an employee of Contractor or a Subcontractor, then the entity or individual owning such property item will be responsible for deciding whether to insure it, and if so in what amount.

6.6 *Waiver of Rights*

A. All policies purchased in accordance with Paragraph 6.05, expressly including the builder's risk policy, shall contain provisions to the effect that in the event of payment of any loss or damage the insurers will have no rights of recovery against any insureds thereunder, or against Engineer or its consultants, or their officers, directors, members, partners, employees, agents, consultants, or subcontractors. Owner and Contractor waive all rights against each other and the respective officers, directors, members, partners, employees, agents, consultants, and subcontractors of each and any of them, for all losses and damages caused by, arising out of, or resulting from any of the perils or causes of loss covered by such policies and any other property insurance applicable to the Work; and, in addition, waive all such rights against Engineer, its consultants, all Subcontractors, all individuals or entities identified in the Supplementary Conditions as insureds, and the officers, directors, members, partners, employees, agents, consultants, and subcontractors of each and any of them, under such policies for losses and damages so caused. None of the above waivers shall extend to the rights that any party making such waiver may have to the proceeds of insurance held by Owner or Contractor as trustee or fiduciary, or otherwise payable under any policy so issued.

B. Owner waives all rights against Contractor, Subcontractors, and Engineer, and the officers, directors, members, partners, employees, agents, consultants and subcontractors of each and any of them, for:

1. loss due to business interruption, loss of use, or other consequential loss extending beyond direct physical loss or damage to Owner's property or the Work caused by, arising out of, or resulting from fire or other perils whether

Copyright © 2013 National Society of Professional Engineers, American Council of Engineering Companies and American Society of Civil Engineers. All rights reserved.

or not insured by Owner; and

2. loss or damage to the completed Project or part thereof caused by, arising out of, or resulting from fire or other insured peril or cause of loss covered by any property insurance maintained on the completed Project or part thereof by Owner during partial occupancy or use pursuant to Paragraph 15.04, after Substantial Completion pursuant to Paragraph 15.03, or after final payment pursuant to Paragraph 15.06.

C. Any insurance policy maintained by Owner covering any loss, damage or consequential loss referred to in Paragraph 6.06.B shall contain provisions to the effect that in the event of payment of any such loss, damage, or consequential loss, the insurers will have no rights of recovery against Contractor, Subcontractors, or Engineer, or the officers, directors, members, partners, employees, agents, consultants, or subcontractors of each and any of them.

D. Contractor shall be responsible for assuring that the agreement under which a Subcontractor performs a portion of the Work contains provisions whereby the Subcontractor waives all rights against Owner, Contractor, all individuals or entities identified in the Supplementary Conditions as insureds, the Engineer and its consultants, and the officers, directors, members, partners, employees, agents, consultants, and subcontractors of each and any of them, for all losses and damages caused by, arising out of, relating to, or resulting from any of the perils or causes of loss covered by builder's risk insurance and any other property insurance applicable to the Work.

6.7 *Receipt and Application of Property Insurance Proceeds*

A. Any insured loss under the builder's risk and other policies of insurance required by Paragraph 6.05 will be adjusted and settled with the named insured that purchased the policy. Such named insured shall act as fiduciary for the other insureds, and give notice to such other insureds that adjustment and settlement of a claim is in progress. Any other insured may state its position regarding a claim for insured loss in writing within 15 days after notice of such claim.

B. Proceeds for such insured losses may be made payable by the insurer either jointly to multiple insureds, or to the named insured that purchased the policy in its own right and as fiduciary for other insureds, subject to the requirements of any applicable mortgage clause. A named insured receiving insurance proceeds under the builder's risk and other policies of insurance required by Paragraph 6.05 shall distribute such proceeds in accordance with such agreement as the parties in interest may reach, or as otherwise required under the dispute resolution provisions of this Contract or applicable Laws and Regulations.

C. If no other special agreement is reached, the damaged Work shall be repaired or replaced, the money so received applied on account thereof, and the Work and the cost thereof covered by Change Order, if needed.

ARTICLE 7 – CONTRACTOR'S RESPONSIBILITIES

7.1 *Supervision and Superintendence*

EJCDC® C-700, Standard General Conditions of the Construction Contract.
Copyright © 2013 National Society of Professional Engineers, American Council of Engineering Companies and American Society of Civil Engineers. All rights reserved.

A. Contractor shall supervise, inspect, and direct the Work competently and efficiently, devoting such attention thereto and applying such skills and expertise as may be necessary to perform the Work in accordance with the Contract Documents. Contractor shall be solely responsible for the means, methods, techniques, sequences, and procedures of construction.

B. At all times during the progress of the Work, Contractor shall assign a competent resident superintendent who shall not be replaced without written notice to Owner and Engineer except under extraordinary circumstances.

7.2 *Labor; Working Hours*

A. Contractor shall provide competent, suitably qualified personnel to survey and lay out the Work and perform construction as required by the Contract Documents. Contractor shall at all times maintain good discipline and order at the Site.

B. Except as otherwise required for the safety or protection of persons or the Work or property at the Site or adjacent thereto, and except as otherwise stated in the Contract Documents, all Work at the Site shall be performed during regular working hours, Monday through Friday. Contractor will not perform Work on a Saturday, Sunday, or any legal holiday. Contractor may perform Work outside regular working hours or on Saturdays, Sundays, or legal holidays only with Owner's written consent, which will not be unreasonably withheld.

7.3 *Services, Materials, and Equipment*

A. Unless otherwise specified in the Contract Documents, Contractor shall provide and assume full responsibility for all services, materials, equipment, labor, transportation, construction equipment and machinery, tools, appliances, fuel, power, light, heat, telephone, water, sanitary facilities, temporary facilities, and all other facilities and incidentals necessary for the performance, testing, start up, and completion of the Work, whether or not such items are specifically called for in the Contract Documents.

B. All materials and equipment incorporated into the Work shall be of good quality and new, except as otherwise provided in the Contract Documents. All special warranties and guarantees required by the Specifications shall expressly run to the benefit of Owner. If required by Engineer, Contractor shall furnish satisfactory evidence (including reports of required tests) as to the source, kind, and quality of materials and equipment.

C. All materials and equipment shall be stored, applied, installed, connected, erected, protected, used, cleaned, and conditioned in accordance with instructions of the applicable Supplier, except as otherwise may be provided in the Contract Documents.

7.4 *"Or Equals"*

A. Whenever an item of material or equipment is specified or described in the Contract Documents by using the name of a proprietary item or the name of a particular Supplier, the Contract Price has been based upon Contractor furnishing such item as specified. The specification or description of such an item is intended to establish the type, function, appearance, and quality required. Unless the specification or description contains or is followed by words reading that no like,

EJCDC® C-700, Standard General Conditions of the Construction Contract.
Copyright © 2013 National Society of Professional Engineers, American Council of Engineering Companies and American Society of Civil Engineers. All rights reserved.

equivalent, or "or equal" item is permitted, Contractor may request that Engineer authorize the use of other items of material or equipment, or items from other proposed suppliers under the circumstances described below.

1. If Engineer in its sole discretion determines that an item of material or equipment proposed by Contractor is functionally equal to that named and sufficiently similar so that no change in related Work will be required, Engineer shall deem it an "or equal" item. For the purposes of this paragraph, a proposed item of material or equipment will be considered functionally equal to an item so named if:
   a. in the exercise of reasonable judgment Engineer determines that:
      1) it is at least equal in materials of construction, quality, durability, appearance, strength, and design characteristics;
      2) it will reliably perform at least equally well the function and achieve the results imposed by the design concept of the completed Project as a functioning whole;
      3) it has a proven record of performance and availability of responsive service; and
      4) it is not objectionable to Owner.
   b. Contractor certifies that, if approved and incorporated into the Work:
      1) there will be no increase in cost to the Owner or increase in Contract Times; and
      2) it will conform substantially to the detailed requirements of the item named in the Contract Documents.

B. *Contractor's Expense*: Contractor shall provide all data in support of any proposed "or equal" item at Contractor's expense.

C. *Engineer's Evaluation and Determination*: Engineer will be allowed a reasonable time to evaluate each "or-equal" request. Engineer may require Contractor to furnish additional data about the proposed "or-equal" item. Engineer will be the sole judge of acceptability. No "or-equal" item will be ordered, furnished, installed, or utilized until Engineer's review is complete and Engineer determines that the proposed item is an "or-equal", which will be evidenced by an approved Shop Drawing or other written communication. Engineer will advise Contractor in writing of any negative determination.

D. *Effect of Engineer's Determination*: Neither approval nor denial of an "or-equal" request shall result in any change in Contract Price. The Engineer's denial of an "or-equal" request shall be final and binding, and may not be reversed through an appeal under any provision of the Contract Documents.

E. *Treatment as a Substitution Request*: If Engineer determines that an item of material or equipment proposed by Contractor does not qualify as an "or-equal" item, Contractor may request that Engineer considered the proposed item as a substitute pursuant to Paragraph 7.05.

EJCDC® C-700, Standard General Conditions of the Construction Contract.
Copyright © 2013 National Society of Professional Engineers, American Council of Engineering Companies and American Society of Civil Engineers. All rights reserved.

7.5 *Substitutes*

A. Unless the specification or description of an item of material or equipment required to be furnished under the Contract Documents contains or is followed by words reading that no substitution is permitted, Contractor may request that Engineer authorize the use of other items of material or equipment under the circumstances described below. To the extent possible such requests shall be made before commencement of related construction at the Site.

1. Contractor shall submit sufficient information as provided below to allow Engineer to determine if the item of material or equipment proposed is functionally equivalent to that named and an acceptable substitute therefor. Engineer will not accept requests for review of proposed substitute items of material or equipment from anyone other than Contractor.
2. The requirements for review by Engineer will be as set forth in Paragraph 7.05.B, as supplemented by the Specifications, and as Engineer may decide is appropriate under the circumstances.
3. Contractor shall make written application to Engineer for review of a proposed substitute item of material or equipment that Contractor seeks to furnish or use. The application:

   a. shall certify that the proposed substitute item will:

      1) perform adequately the functions and achieve the results called for by the general design,

      2) be similar in substance to that specified, and

      3) be suited to the same use as that specified.

   b. will state:

      1) the extent, if any, to which the use of the proposed substitute item will necessitate a change in Contract Times,

      2) whether use of the proposed substitute item in the Work will require a change in any of the Contract Documents (or in the provisions of any other direct contract with Owner for other work on the Project) to adapt the design to the proposed substitute item, and

      3) whether incorporation or use of the proposed substitute item in connection with the Work is subject to payment of any license fee or royalty.

   c. will identify:

      1) all variations of the proposed substitute item from that specified, and

      2) available engineering, sales, maintenance, repair, and replacement services.

   d. shall contain an itemized estimate of all costs or credits that will result directly or indirectly from use of such substitute item, including but not limited to changes in Contract Price, shared savings, costs of redesign, and

EJCDC® C-700, Standard General Conditions of the Construction Contract.
Copyright © 2013 National Society of Professional Engineers, American Council of Engineering Companies and American Society of Civil Engineers. All rights reserved.

claims of other contractors affected by any resulting change.

B. *Engineer's Evaluation and Determination*: Engineer will be allowed a reasonable time to evaluate each substitute request, and to obtain comments and direction from Owner. Engineer may require Contractor to furnish additional data about the proposed substitute item. Engineer will be the sole judge of acceptability. No substitute will be ordered, furnished, installed, or utilized until Engineer's review is complete and Engineer determines that the proposed item is an acceptable substitute. Engineer's determination will be evidenced by a Field Order or a proposed Change Order accounting for the substitution itself and all related impacts, including changes in Contract Price or Contract Times. Engineer will advise Contractor in writing of any negative determination.

C. *Special Guarantee*: Owner may require Contractor to furnish at Contractor's expense a special performance guarantee or other surety with respect to any substitute.

D. *Reimbursement of Engineer's Cost*: Engineer will record Engineer's costs in evaluating a substitute proposed or submitted by Contractor. Whether or not Engineer approves a substitute so proposed or submitted by Contractor, Contractor shall reimburse Owner for the reasonable charges of Engineer for evaluating each such proposed substitute. Contractor shall also reimburse Owner for the reasonable charges of Engineer for making changes in the Contract Documents (or in the provisions of any other direct contract with Owner) resulting from the acceptance of each proposed substitute.

E. *Contractor's Expense*: Contractor shall provide all data in support of any proposed substitute at Contractor's expense.

F. *Effect of Engineer's Determination*: If Engineer approves the substitution request, Contractor shall execute the proposed Change Order and proceed with the substitution. The Engineer's denial of a substitution request shall be final and binding, and may not be reversed through an appeal under any provision of the Contract Documents. Contractor may challenge the scope of reimbursement costs imposed under Paragraph 7.05.D, by timely submittal of a Change Proposal.

7.6 *Concerning Subcontractors, Suppliers, and Others*

A. Contractor may retain Subcontractors and Suppliers for the performance of parts of the Work. Such Subcontractors and Suppliers must be acceptable to Owner.

B. Contractor shall retain specific Subcontractors, Suppliers, or other individuals or entities for the performance of designated parts of the Work if required by the Contract to do so.

C. Subsequent to the submittal of Contractor's Bid or final negotiation of the terms of the Contract, Owner may not require Contractor to retain any Subcontractor, Supplier, or other individual or entity to furnish or perform any of the Work against which Contractor has reasonable objection.

D. Prior to entry into any binding subcontract or purchase order, Contractor shall submit to Owner the identity of the proposed Subcontractor or Supplier (unless Owner has already deemed such proposed Subcontractor or Supplier acceptable,

EJCDC® C-700, Standard General Conditions of the Construction Contract.
Copyright © 2013 National Society of Professional Engineers, American Council of Engineering Companies and American Society of Civil Engineers. All rights reserved.

during the bidding process or otherwise). Such proposed Subcontractor or Supplier shall be deemed acceptable to Owner unless Owner raises a substantive, reasonable objection within five days.

E. Owner may require the replacement of any Subcontractor, Supplier, or other individual or entity retained by Contractor to perform any part of the Work. Owner also may require Contractor to retain specific replacements; provided, however, that Owner may not require a replacement to which Contractor has a reasonable objection. If Contractor has submitted the identity of certain Subcontractors, Suppliers, or other individuals or entities for acceptance by Owner, and Owner has accepted it (either in writing or by failing to make written objection thereto), then Owner may subsequently revoke the acceptance of any such Subcontractor, Supplier, or other individual or entity so identified solely on the basis of substantive, reasonable objection after due investigation. Contractor shall submit an acceptable replacement for the rejected Subcontractor, Supplier, or other individual or entity.

F. If Owner requires the replacement of any Subcontractor, Supplier, or other individual or entity retained by Contractor to perform any part of the Work, then Contractor shall be entitled to an adjustment in Contract Price or Contract Times, or both, with respect to the replacement; and Contractor shall initiate a Change Proposal for such adjustment within 30 days of Owner's requirement of replacement.

G. No acceptance by Owner of any such Subcontractor, Supplier, or other individual or entity, whether initially or as a replacement, shall constitute a waiver of the right of Owner to the completion of the Work in accordance with the Contract Documents.

H. On a monthly basis Contractor shall submit to Engineer a complete list of all Subcontractors and Suppliers having a direct contract with Contractor, and of all other Subcontractors and Suppliers known to Contractor at the time of submittal.

I. Contractor shall be fully responsible to Owner and Engineer for all acts and omissions of the Subcontractors, Suppliers, and other individuals or entities performing or furnishing any of the Work just as Contractor is responsible for Contractor's own acts and omissions.

J. Contractor shall be solely responsible for scheduling and coordinating the work of Subcontractors, Suppliers, and all other individuals or entities performing or furnishing any of the Work.

K. Contractor shall restrict all Subcontractors, Suppliers, and such other individuals or entities performing or furnishing any of the Work from communicating with Engineer or Owner, except through Contractor or in case of an emergency, or as otherwise expressly allowed herein.

L. The divisions and sections of the Specifications and the identifications of any Drawings shall not control Contractor in dividing the Work among Subcontractors or Suppliers or delineating the Work to be performed by any specific trade.

M. All Work performed for Contractor by a Subcontractor or Supplier shall be pursuant to an appropriate contractual agreement that specifically binds the Subcontractor or Supplier to the applicable terms and conditions of the Contract Documents for the benefit of Owner and Engineer.

Copyright © 2013 National Society of Professional Engineers, American Council of Engineering Companies and American Society of Civil Engineers. All rights reserved.

N. Owner may furnish to any Subcontractor or Supplier, to the extent practicable, information about amounts paid to Contractor on account of Work performed for Contractor by the particular Subcontractor or Supplier.

O. Nothing in the Contract Documents:

1. shall create for the benefit of any such Subcontractor, Supplier, or other individual or entity any contractual relationship between Owner or Engineer and any such Subcontractor, Supplier, or other individual or entity; nor

2. shall create any obligation on the part of Owner or Engineer to pay or to see to the payment of any money due any such Subcontractor, Supplier, or other individual or entity except as may otherwise be required by Laws and Regulations.

7.7 *Patent Fees and Royalties*

A. Contractor shall pay all license fees and royalties and assume all costs incident to the use in the performance of the Work or the incorporation in the Work of any invention, design, process, product, or device which is the subject of patent rights or copyrights held by others. If a particular invention, design, process, product, or device is specified in the Contract Documents for use in the performance of the Work and if, to the actual knowledge of Owner or Engineer, its use is subject to patent rights or copyrights calling for the payment of any license fee or royalty to others, the existence of such rights shall be disclosed by Owner in the Contract Documents.

B. To the fullest extent permitted by Laws and Regulations, Owner shall indemnify and hold harmless Contractor, and its officers, directors, members, partners, employees, agents, consultants, and subcontractors from and against all claims, costs, losses, and damages (including but not limited to all fees and charges of engineers, architects, attorneys, and other professionals, and all court or arbitration or other dispute resolution costs) arising out of or relating to any infringement of patent rights or copyrights incident to the use in the performance of the Work or resulting from the incorporation in the Work of any invention, design, process, product, or device specified in the Contract Documents, but not identified as being subject to payment of any license fee or royalty to others required by patent rights or copyrights.

C. To the fullest extent permitted by Laws and Regulations, Contractor shall indemnify and hold harmless Owner and Engineer, and the officers, directors, members, partners, employees, agents, consultants and subcontractors of each and any of them from and against all claims, costs, losses, and damages (including but not limited to all fees and charges of engineers, architects, attorneys, and other professionals and all court or arbitration or other dispute resolution costs) arising out of or relating to any infringement of patent rights or copyrights incident to the use in the performance of the Work or resulting from the incorporation in the Work of any invention, design, process, product, or device not specified in the Contract Documents.

7.8 *Permits*

A. Unless otherwise provided in the Contract Documents, Contractor shall obtain and pay for all construction permits and licenses. Owner shall assist Contractor, when

EJCDC® C-700, Standard General Conditions of the Construction Contract.
Copyright © 2013 National Society of Professional Engineers, American Council of Engineering Companies and American Society of Civil Engineers. All rights reserved.

necessary, in obtaining such permits and licenses. Contractor shall pay all governmental charges and inspection fees necessary for the prosecution of the Work which are applicable at the time of the submission of Contractor's Bid (or when Contractor became bound under a negotiated contract). Owner shall pay all charges of utility owners for connections for providing permanent service to the Work

7.9 *Taxes*

A. Contractor shall pay all sales, consumer, use, and other similar taxes required to be paid by Contractor in accordance with the Laws and Regulations of the place of the Project which are applicable during the performance of the Work.

7.10 *Laws and Regulations*

A. Contractor shall give all notices required by and shall comply with all Laws and Regulations applicable to the performance of the Work. Except where otherwise expressly required by applicable Laws and Regulations, neither Owner nor Engineer shall be responsible for monitoring Contractor's compliance with any Laws or Regulations.

B. If Contractor performs any Work or takes any other action knowing or having reason to know that it is contrary to Laws or Regulations, Contractor shall bear all resulting costs and losses, and shall indemnify and hold harmless Owner and Engineer, and the officers, directors, members, partners, employees, agents, consultants, and subcontractors of each and any of them from and against all claims, costs, losses, and damages (including but not limited to all fees and charges of engineers, architects, attorneys, and other professionals and all court or arbitration or other dispute resolution costs) arising out of or relating to such Work or other action. It shall not be Contractor's responsibility to make certain that the Work described in the Contract Documents is in accordance with Laws and Regulations, but this shall not relieve Contractor of Contractor's obligations under Paragraph 3.03.

C. Owner or Contractor may give notice to the other party of any changes after the submission of Contractor's Bid (or after the date when Contractor became bound under a negotiated contract) in Laws or Regulations having an effect on the cost or time of performance of the Work, including but not limited to changes in Laws or Regulations having an effect on procuring permits and on sales, use, value-added, consumption, and other similar taxes. If Owner and Contractor are unable to agree on entitlement to or on the amount or extent, if any, of any adjustment in Contract Price or Contract Times resulting from such changes, then within 30 days of such notice Contractor may submit a Change Proposal, or Owner may initiate a Claim.

7.11 *Record Documents*

A. Contractor shall maintain in a safe place at the Site one printed record copy of all Drawings, Specifications, Addenda, Change Orders, Work Change Directives, Field Orders, written interpretations and clarifications, and approved Shop Drawings. Contractor shall keep such record documents in good order and annotate them to show changes made during construction. These record documents, together with all approved Samples, will be available to Engineer for reference. Upon completion of the Work, Contractor shall deliver these record documents to

EJCDC® C-700, Standard General Conditions of the Construction Contract.
Copyright © 2013 National Society of Professional Engineers, American Council of Engineering Companies and American Society of Civil Engineers. All rights reserved.

Engineer.

7.12 *Safety and Protection*

A. Contractor shall be solely responsible for initiating, maintaining, and supervising all safety precautions and programs in connection with the Work. Such responsibility does not relieve Subcontractors of their responsibility for the safety of persons or property in the performance of their work, nor for compliance with applicable safety Laws and Regulations. Contractor shall take all necessary precautions for the safety of, and shall provide the necessary protection to prevent damage, injury, or loss to:

1. all persons on the Site or who may be affected by the Work;
2. all the Work and materials and equipment to be incorporated therein, whether in storage on or off the Site; and
3. other property at the Site or adjacent thereto, including trees, shrubs, lawns, walks, pavements, roadways, structures, other work in progress, utilities, and Underground Facilities not designated for removal, relocation, or replacement in the course of construction.

B. Contractor shall comply with all applicable Laws and Regulations relating to the safety of persons or property, or to the protection of persons or property from damage, injury, or loss; and shall erect and maintain all necessary safeguards for such safety and protection. Contractor shall notify Owner; the owners of adjacent property, Underground Facilities, and other utilities; and other contractors and utility owners performing work at or adjacent to the Site, when prosecution of the Work may affect them, and shall cooperate with them in the protection, removal, relocation, and replacement of their property or work in progress.

C. Contractor shall comply with the applicable requirements of Owner's safety programs, if any. The Supplementary Conditions identify any Owner's safety programs that are applicable to the Work.

D. Contractor shall inform Owner and Engineer of the specific requirements of Contractor's safety program with which Owner's and Engineer's employees and representatives must comply while at the Site.

E. All damage, injury, or loss to any property referred to in Paragraph 7.12.A.2 or 7.12.A.3 caused, directly or indirectly, in whole or in part, by Contractor, any Subcontractor, Supplier, or any other individual or entity directly or indirectly employed by any of them to perform any of the Work, or anyone for whose acts any of them may be liable, shall be remedied by Contractor at its expense (except damage or loss attributable to the fault of Drawings or Specifications or to the acts or omissions of Owner or Engineer or anyone employed by any of them, or anyone for whose acts any of them may be liable, and not attributable, directly or indirectly, in whole or in part, to the fault or negligence of Contractor or any Subcontractor, Supplier, or other individual or entity directly or indirectly employed by any of them).

F. Contractor's duties and responsibilities for safety and protection shall continue until

EJCDC® C-700, Standard General Conditions of the Construction Contract.
Copyright © 2013 National Society of Professional Engineers, American Council of Engineering Companies and American Society of Civil Engineers. All rights reserved.

such time as all the Work is completed and Engineer has issued a notice to Owner and Contractor in accordance with Paragraph 15.06.B that the Work is acceptable (except as otherwise expressly provided in connection with Substantial Completion).

G. Contractor's duties and responsibilities for safety and protection shall resume whenever Contractor or any Subcontractor or Supplier returns to the Site to fulfill warranty or correction obligations, or to conduct other tasks arising from the Contract Documents.

7.13 *Safety Representative*

A. Contractor shall designate a qualified and experienced safety representative at the Site whose duties and responsibilities shall be the prevention of accidents and the maintaining and supervising of safety precautions and programs.

7.14 *Hazard Communication Programs*

A. Contractor shall be responsible for coordinating any exchange of material safety data sheets or other hazard communication information required to be made available to or exchanged between or among employers at the Site in accordance with Laws or Regulations.

7.15 *Emergencies*

A. In emergencies affecting the safety or protection of persons or the Work or property at the Site or adjacent thereto, Contractor is obligated to act to prevent threatened damage, injury, or loss. Contractor shall give Engineer prompt written notice if Contractor believes that any significant changes in the Work or variations from the Contract Documents have been caused thereby or are required as a result thereof. If Engineer determines that a change in the Contract Documents is required because of the action taken by Contractor in response to such an emergency, a Work Change Directive or Change Order will be issued.

7.16 *Shop Drawings, Samples, and Other Submittals*

A. *Shop Drawing and Sample Submittal Requirements*:

1. Before submitting a Shop Drawing or Sample, Contractor shall have:

a. reviewed and coordinated the Shop Drawing or Sample with other Shop Drawings and Samples and with the requirements of the Work and the Contract Documents;

b. determined and verified all field measurements, quantities, dimensions, specified performance and design criteria, installation requirements, materials, catalog numbers, and similar information with respect thereto;

c. determined and verified the suitability of all materials and equipment offered with respect to the indicated application, fabrication, shipping, handling, storage, assembly, and installation pertaining to the performance of the Work; and

d. determined and verified all information relative to Contractor's responsibilities for means, methods, techniques, sequences, and procedures of construction, and safety precautions and programs incident

Copyright © 2013 National Society of Professional Engineers, American Council of Engineering Companies and American Society of Civil Engineers. All rights reserved.

thereto.

2. Each submittal shall bear a stamp or specific written certification that Contractor has satisfied Contractor's obligations under the Contract Documents with respect to Contractor's review of that submittal, and that Contractor approves the submittal.
3. With each submittal, Contractor shall give Engineer specific written notice of any variations that the Shop Drawing or Sample may have from the requirements of the Contract Documents. This notice shall be set forth in a written communication separate from the Shop Drawings or Sample submittal; and, in addition, in the case of Shop Drawings by a specific notation made on each Shop Drawing submitted to Engineer for review and approval of each such variation.

B. *Submittal Procedures for Shop Drawings and Samples*: Contractor shall submit Shop Drawings and Samples to Engineer for review and approval in accordance with the accepted Schedule of Submittals. Each submittal will be identified as Engineer may require.

1. *Shop Drawings*:

   a. Contractor shall submit the number of copies required in the Specifications.

   b. Data shown on the Shop Drawings will be complete with respect to quantities, dimensions, specified performance and design criteria, materials, and similar data to show Engineer the services, materials, and equipment Contractor proposes to provide and to enable Engineer to review the information for the limited purposes required by Paragraph 7.16.D.

2. *Samples*:

   a. Contractor shall submit the number of Samples required in the Specifications.

   b. Contractor shall clearly identify each Sample as to material, Supplier, pertinent data such as catalog numbers, the use for which intended and other data as Engineer may require to enable Engineer to review the submittal for the limited purposes required by Paragraph 7.16.D.

3. Where a Shop Drawing or Sample is required by the Contract Documents or the Schedule of Submittals, any related Work performed prior to Engineer's review and approval of the pertinent submittal will be at the sole expense and responsibility of Contractor.

C. *Other Submittals*: Contractor shall submit other submittals to Engineer in accordance with the accepted Schedule of Submittals, and pursuant to the applicable terms of the Specifications.

D. *Engineer's Review*:

1. Engineer will provide timely review of Shop Drawings and Samples in accordance with the Schedule of Submittals acceptable to Engineer. Engineer's review and approval will be only to determine if the items covered by the

EJCDC® C-700, Standard General Conditions of the Construction Contract.
Copyright © 2013 National Society of Professional Engineers, American Council of Engineering Companies and American Society of Civil Engineers. All rights reserved.

submittals will, after installation or incorporation in the Work, conform to the information given in the Contract Documents and be compatible with the design concept of the completed Project as a functioning whole as indicated by the Contract Documents.

2. Engineer's review and approval will not extend to means, methods, techniques, sequences, or procedures of construction or to safety precautions or programs incident thereto.

3. Engineer's review and approval of a separate item as such will not indicate approval of the assembly in which the item functions.

4. Engineer's review and approval of a Shop Drawing or Sample shall not relieve Contractor from responsibility for any variation from the requirements of the Contract Documents unless Contractor has complied with the requirements of Paragraph 7.16.A.3 and Engineer has given written approval of each such variation by specific written notation thereof incorporated in or accompanying the Shop Drawing or Sample. Engineer will document any such approved variation from the requirements of the Contract Documents in a Field Order.

5. Engineer's review and approval of a Shop Drawing or Sample shall not relieve Contractor from responsibility for complying with the requirements of Paragraph 7.16.A and B.

6. Engineer's review and approval of a Shop Drawing or Sample, or of a variation from the requirements of the Contract Documents, shall not, under any circumstances, change the Contract Times or Contract Price, unless such changes are included in a Change Order.

7. Neither Engineer's receipt, review, acceptance or approval of a Shop Drawing, Sample, or other submittal shall result in such item becoming a Contract Document.

8. Contractor shall perform the Work in compliance with the requirements and commitments set forth in approved Shop Drawings and Samples, subject to the provisions of Paragraph 7.16.D.4.

E. *Resubmittal Procedures*:

1. Contractor shall make corrections required by Engineer and shall return the required number of corrected copies of Shop Drawings and submit, as required, new Samples for review and approval. Contractor shall direct specific attention in writing to revisions other than the corrections called for by Engineer on previous submittals.

2. Contractor shall furnish required submittals with sufficient information and accuracy to obtain required approval of an item with no more than three submittals. Engineer will record Engineer's time for reviewing a fourth or subsequent submittal of a Shop Drawings, sample, or other item requiring approval, and Contractor shall be responsible for Engineer's charges to Owner for such time. Owner may impose a set-off against payments due to Contractor to secure reimbursement for such charges.

EJCDC® C-700, Standard General Conditions of the Construction Contract.
Copyright © 2013 National Society of Professional Engineers, American Council of Engineering Companies and American Society of Civil Engineers. All rights reserved.

3. If Contractor requests a change of a previously approved submittal item, Contractor shall be responsible for Engineer's charges to Owner for its review time, and Owner may impose a set-off against payments due to Contractor to secure reimbursement for such charges, unless the need for such change is beyond the control of Contractor.

7.17 *Contractor's General Warranty and Guarantee*

A. Contractor warrants and guarantees to Owner that all Work will be in accordance with the Contract Documents and will not be defective. Engineer and its officers, directors, members, partners, employees, agents, consultants, and subcontractors shall be entitled to rely on Contractor's warranty and guarantee.

B. Contractor's warranty and guarantee hereunder excludes defects or damage caused by:

1. abuse, modification, or improper maintenance or operation by persons other than Contractor, Subcontractors, Suppliers, or any other individual or entity for whom Contractor is responsible; or

2. normal wear and tear under normal usage.

C. Contractor's obligation to perform and complete the Work in accordance with the Contract Documents shall be absolute. None of the following will constitute an acceptance of Work that is not in accordance with the Contract Documents or a release of Contractor's obligation to perform the Work in accordance with the Contract Documents:

1. observations by Engineer;

2. recommendation by Engineer or payment by Owner of any progress or final payment;

3. the issuance of a certificate of Substantial Completion by Engineer or any payment related thereto by Owner;

4. use or occupancy of the Work or any part thereof by Owner;

5. any review and approval of a Shop Drawing or Sample submittal;

6. the issuance of a notice of acceptability by Engineer;

7. any inspection, test, or approval by others; or

8. any correction of defective Work by Owner.

D. If the Contract requires the Contractor to accept the assignment of a contract entered into by Owner, then the specific warranties, guarantees, and correction obligations contained in the assigned contract shall govern with respect to Contractor's performance obligations to Owner for the Work described in the assigned contract.

7.18 *Indemnification*

A. To the fullest extent permitted by Laws and Regulations, and in addition to any other obligations of Contractor under the Contract or otherwise, Contractor shall indemnify and hold harmless Owner and Engineer, and the officers, directors, members, partners, employees, agents, consultants and subcontractors of each and any of them from and against all claims, costs, losses, and damages (including but not

Copyright © 2013 National Society of Professional Engineers, American Council of Engineering Companies and American Society of Civil Engineers. All rights reserved.

limited to all fees and charges of engineers, architects, attorneys, and other professionals and all court or arbitration or other dispute resolution costs) arising out of or relating to the performance of the Work, provided that any such claim, cost, loss, or damage is attributable to bodily injury, sickness, disease, or death, or to injury to or destruction of tangible property (other than the Work itself), including the loss of use resulting therefrom but only to the extent caused by any negligent act or omission of Contractor, any Subcontractor, any Supplier, or any individual or entity directly or indirectly employed by any of them to perform any of the Work or anyone for whose acts any of them may be liable.

B. In any and all claims against Owner or Engineer or any of their officers, directors, members, partners, employees, agents, consultants, or subcontractors by any employee (or the survivor or personal representative of such employee) of Contractor, any Subcontractor, any Supplier, or any individual or entity directly or indirectly employed by any of them to perform any of the Work, or anyone for whose acts any of them may be liable, the indemnification obligation under Paragraph 7.18.A shall not be limited in any way by any limitation on the amount or type of damages, compensation, or benefits payable by or for Contractor or any such Subcontractor, Supplier, or other individual or entity under workers' compensation acts, disability benefit acts, or other employee benefit acts.

C. The indemnification obligations of Contractor under Paragraph 7.18.A shall not extend to the liability of Engineer and Engineer's officers, directors, members, partners, employees, agents, consultants and subcontractors arising out of:

1. the preparation or approval of, or the failure to prepare or approve maps, Drawings, opinions, reports, surveys, Change Orders, designs, or Specifications; or

2. giving directions or instructions, or failing to give them, if that is the primary cause of the injury or damage.

7.19 *Delegation of Professional Design Services*

A. Contractor will not be required to provide professional design services unless such services are specifically required by the Contract Documents for a portion of the Work or unless such services are required to carry out Contractor's responsibilities for construction means, methods, techniques, sequences and procedures. Contractor shall not be required to provide professional services in violation of applicable Laws and Regulations.

B. If professional design services or certifications by a design professional related to systems, materials, or equipment are specifically required of Contractor by the Contract Documents, Owner and Engineer will specify all performance and design criteria that such services must satisfy. Contractor shall cause such services or certifications to be provided by a properly licensed professional, whose signature and seal shall appear on all drawings, calculations, specifications, certifications, and other submittals prepared by such professional. Shop Drawings and other submittals related to the Work designed or certified by such professional, if prepared by others, shall bear such professional's written approval when submitted to Engineer.

EJCDC® C-700, Standard General Conditions of the Construction Contract.
Copyright © 2013 National Society of Professional Engineers, American Council of Engineering Companies and American Society of Civil Engineers. All rights reserved.

C. Owner and Engineer shall be entitled to rely upon the adequacy, accuracy, and completeness of the services, certifications, or approvals performed by such design professionals, provided Owner and Engineer have specified to Contractor all performance and design criteria that such services must satisfy.

D. Pursuant to this paragraph, Engineer's review and approval of design calculations and design drawings will be only for the limited purpose of checking for conformance with performance and design criteria given and the design concept expressed in the Contract Documents. Engineer's review and approval of Shop Drawings and other submittals (except design calculations and design drawings) will be only for the purpose stated in Paragraph 7.16.D.1.

E. Contractor shall not be responsible for the adequacy of the performance or design criteria specified by Owner or Engineer.

ARTICLE 8 – OTHER WORK AT THE SITE

8.1 *Other Work*

A. In addition to and apart from the Work under the Contract Documents, the Owner may perform other work at or adjacent to the Site. Such other work may be performed by Owner's employees, or through contracts between the Owner and third parties. Owner may also arrange to have third-party utility owners perform work on their utilities and facilities at or adjacent to the Site.

B. If Owner performs other work at or adjacent to the Site with Owner's employees, or through contracts for such other work, then Owner shall give Contractor written notice thereof prior to starting any such other work. If Owner has advance information regarding the start of any utility work at or adjacent to the Site, Owner shall provide such information to Contractor.

C. Contractor shall afford each other contractor that performs such other work, each utility owner performing other work, and Owner, if Owner is performing other work with Owner's employees, proper and safe access to the Site, and provide a reasonable opportunity for the introduction and storage of materials and equipment and the execution of such other work. Contractor shall do all cutting, fitting, and patching of the Work that may be required to properly connect or otherwise make its several parts come together and properly integrate with such other work. Contractor shall not endanger any work of others by cutting, excavating, or otherwise altering such work; provided, however, that Contractor may cut or alter others' work with the written consent of Engineer and the others whose work will be affected.

D. If the proper execution or results of any part of Contractor's Work depends upon work performed by others under this Article 8, Contractor shall inspect such other work and promptly report to Engineer in writing any delays, defects, or deficiencies in such other work that render it unavailable or unsuitable for the proper execution and results of Contractor's Work. Contractor's failure to so report will constitute an acceptance of such other work as fit and proper for integration with Contractor's Work except for latent defects and deficiencies in such other work.

8.2 *Coordination*

EJCDC® C-700, Standard General Conditions of the Construction Contract.
Copyright © 2013 National Society of Professional Engineers, American Council of Engineering Companies and American Society of Civil Engineers. All rights reserved.

A. If Owner intends to contract with others for the performance of other work at or adjacent to the Site, to perform other work at or adjacent to the Site with Owner's employees, or to arrange to have utility owners perform work at or adjacent to the Site, the following will be set forth in the Supplementary Conditions or provided to Contractor prior to the start of any such other work:

1. the identity of the individual or entity that will have authority and responsibility for coordination of the activities among the various contractors;
2. an itemization of the specific matters to be covered by such authority and responsibility; and
3. the extent of such authority and responsibilities.

B. Unless otherwise provided in the Supplementary Conditions, Owner shall have sole authority and responsibility for such coordination.

8.3 *Legal Relationships*

A. If, in the course of performing other work at or adjacent to the Site for Owner, the Owner's employees, any other contractor working for Owner, or any utility owner causes damage to the Work or to the property of Contractor or its Subcontractors, or delays, disrupts, interferes with, or increases the scope or cost of the performance of the Work, through actions or inaction, then Contractor shall be entitled to an equitable adjustment in the Contract Price or the Contract Times, or both. Contractor must submit any Change Proposal seeking an equitable adjustment in the Contract Price or the Contract Times under this paragraph within 30 days of the damaging, delaying, disrupting, or interfering event. The entitlement to, and extent of, any such equitable adjustment shall take into account information (if any) regarding such other work that was provided to Contractor in the Contract Documents prior to the submittal of the Bid or the final negotiation of the terms of the Contract. When applicable, any such equitable adjustment in Contract Price shall be conditioned on Contractor assigning to Owner all Contractor's rights against such other contractor or utility owner with respect to the damage, delay, disruption, or interference that is the subject of the adjustment. Contractor's entitlement to an adjustment of the Contract Times is conditioned on such adjustment being essential to Contractor's ability to complete the Work within the Contract Times.

B. Contractor shall take reasonable and customary measures to avoid damaging, delaying, disrupting, or interfering with the work of Owner, any other contractor, or any utility owner performing other work at or adjacent to the Site. If Contractor fails to take such measures and as a result damages, delays, disrupts, or interferes with the work of any such other contractor or utility owner, then Owner may impose a set-off against payments due to Contractor, and assign to such other contractor or utility owner the Owner's contractual rights against Contractor with respect to the breach of the obligations set forth in this paragraph.

C. When Owner is performing other work at or adjacent to the Site with Owner's employees, Contractor shall be liable to Owner for damage to such other work, and for the reasonable direct delay, disruption, and interference costs incurred by Owner as a result of Contractor's failure to take reasonable and customary measures with respect to Owner's other work. In response to such damage, delay, disruption, or

Copyright © 2013 National Society of Professional Engineers, American Council of Engineering Companies and American Society of Civil Engineers. All rights reserved.

interference, Owner may impose a set-off against payments due to Contractor.

D. If Contractor damages, delays, disrupts, or interferes with the work of any other contractor, or any utility owner performing other work at or adjacent to the Site, through Contractor's failure to take reasonable and customary measures to avoid such impacts, or if any claim arising out of Contractor's actions, inactions, or negligence in performance of the Work at or adjacent to the Site is made by any such other contractor or utility owner against Contractor, Owner, or Engineer, then Contractor shall (1) promptly attempt to settle the claim as to all parties through negotiations with such other contractor or utility owner, or otherwise resolve the claim by arbitration or other dispute resolution proceeding or at law, and (2) indemnify and hold harmless Owner and Engineer, and the officers, directors, members, partners, employees, agents, consultants and subcontractors of each and any of them from and against any such claims, and against all costs, losses, and damages (including but not limited to all fees and charges of engineers, architects, attorneys, and other professionals and all court or arbitration or other dispute resolution costs) arising out of or relating to such damage, delay, disruption, or interference.

ARTICLE 9 – OWNER'S RESPONSIBILITIES

9.1 *Communications to Contractor*

A. Except as otherwise provided in these General Conditions, Owner shall issue all communications to Contractor through Engineer.

9.2 *Replacement of Engineer*

A. Owner may at its discretion appoint an engineer to replace Engineer, provided Contractor makes no reasonable objection to the replacement engineer. The replacement engineer's status under the Contract Documents shall be that of the former Engineer.

9.3 *Furnish Data*

A. Owner shall promptly furnish the data required of Owner under the Contract Documents.

9.4 *Pay When Due*

A. Owner shall make payments to Contractor when they are due as provided in the Agreement.

9.5 *Lands and Easements; Reports, Tests, and Drawings*

A. Owner's duties with respect to providing lands and easements are set forth in Paragraph 5.01.

B. Owner's duties with respect to providing engineering surveys to establish reference points are set forth in Paragraph 4.03.

C. Article 5 refers to Owner's identifying and making available to Contractor copies of reports of explorations and tests of conditions at the Site, and drawings of physical conditions relating to existing surface or subsurface structures at the Site.

EJCDC® C-700, Standard General Conditions of the Construction Contract.
Copyright © 2013 National Society of Professional Engineers, American Council of Engineering Companies and American Society of Civil Engineers. All rights reserved.

9.6 *Insurance*

A. Owner's responsibilities, if any, with respect to purchasing and maintaining liability and property insurance are set forth in Article 6.

9.7 *Change Orders*

A. Owner's responsibilities with respect to Change Orders are set forth in Article 11.

9.8 *Inspections, Tests, and Approvals*

A. Owner's responsibility with respect to certain inspections, tests, and approvals is set forth in Paragraph 14.02.B.

9.9 *Limitations on Owner's Responsibilities*

A. The Owner shall not supervise, direct, or have control or authority over, nor be responsible for, Contractor's means, methods, techniques, sequences, or procedures of construction, or the safety precautions and programs incident thereto, or for any failure of Contractor to comply with Laws and Regulations applicable to the performance of the Work. Owner will not be responsible for Contractor's failure to perform the Work in accordance with the Contract Documents.

9.10 *Undisclosed Hazardous Environmental Condition*

A. Owner's responsibility in respect to an undisclosed Hazardous Environmental Condition is set forth in Paragraph 5.06.

9.11 *Evidence of Financial Arrangements*

A. Upon request of Contractor, Owner shall furnish Contractor reasonable evidence that financial arrangements have been made to satisfy Owner's obligations under the Contract Documents (including obligations under proposed changes in the Work).

9.12 *Safety Programs*

A. While at the Site, Owner's employees and representatives shall comply with the specific applicable requirements of Contractor's safety programs of which Owner has been informed.

B. Owner shall furnish copies of any applicable Owner safety programs to Contractor.

ARTICLE 10 – ENGINEER'S STATUS DURING CONSTRUCTION

10.1 *Owner's Representative*

A. Engineer will be Owner's representative during the construction period. The duties and responsibilities and the limitations of authority of Engineer as Owner's representative during construction are set forth in the Contract.

10.2 *Visits to Site*

A. Engineer will make visits to the Site at intervals appropriate to the various stages of construction as Engineer deems necessary in order to observe as an experienced and qualified design professional the progress that has been made and the quality of the various aspects of Contractor's executed Work. Based on

EJCDC® C-700, Standard General Conditions of the Construction Contract.
Copyright © 2013 National Society of Professional Engineers, American Council of Engineering Companies and American Society of Civil Engineers. All rights reserved.

information obtained during such visits and observations, Engineer, for the benefit of Owner, will determine, in general, if the Work is proceeding in accordance with the Contract Documents. Engineer will not be required to make exhaustive or continuous inspections on the Site to check the quality or quantity of the Work. Engineer's efforts will be directed toward providing for Owner a greater degree of confidence that the completed Work will conform generally to the Contract Documents. On the basis of such visits and observations, Engineer will keep Owner informed of the progress of the Work and will endeavor to guard Owner against defective Work.

B. Engineer's visits and observations are subject to all the limitations on Engineer's authority and responsibility set forth in Paragraph 10.08. Particularly, but without limitation, during or as a result of Engineer's visits or observations of Contractor's Work, Engineer will not supervise, direct, control, or have authority over or be responsible for Contractor's means, methods, techniques, sequences, or procedures of construction, or the safety precautions and programs incident thereto, or for any failure of Contractor to comply with Laws and Regulations applicable to the performance of the Work.

10.3 *Project Representative*

A. If Owner and Engineer have agreed that Engineer will furnish a Resident Project Representative to represent Engineer at the Site and assist Engineer in observing the progress and quality of the Work, then the authority and responsibilities of any such Resident Project Representative will be as provided in the Supplementary Conditions, and limitations on the responsibilities thereof will be as provided in Paragraph 10.08. If Owner designates another representative or agent to represent Owner at the Site who is not Engineer's consultant, agent, or employee, the responsibilities and authority and limitations thereon of such other individual or entity will be as provided in the Supplementary Conditions.

10.4 *Rejecting Defective Work*

A. Engineer has the authority to reject Work in accordance with Article 14.

10.5 *Shop Drawings, Change Orders and Payments*

A. Engineer's authority, and limitations thereof, as to Shop Drawings and Samples, are set forth in Paragraph 7.16.

B. Engineer's authority, and limitations thereof, as to design calculations and design drawings submitted in response to a delegation of professional design services, if any, are set forth in Paragraph 7.19.

C. Engineer's authority as to Change Orders is set forth in Article 11.

D. Engineer's authority as to Applications for Payment is set forth in Article 15.

10.6 *Determinations for Unit Price Work*

A. Engineer will determine the actual quantities and classifications of Unit Price Work performed by Contractor as set forth in Paragraph 13.03.

10.7 *Decisions on Requirements of Contract Documents and Acceptability of Work*

A. Engineer will render decisions regarding the requirements of the Contract

EJCDC® C-700, Standard General Conditions of the Construction Contract.
Copyright © 2013 National Society of Professional Engineers, American Council of Engineering Companies and American Society of Civil Engineers. All rights reserved.

Documents, and judge the acceptability of the Work, pursuant to the specific procedures set forth herein for initial interpretations, Change Proposals, and acceptance of the Work. In rendering such decisions and judgments, Engineer will not show partiality to Owner or Contractor, and will not be liable to Owner, Contractor, or others in connection with any proceedings, interpretations, decisions, or judgments conducted or rendered in good faith.

10.8 *Limitations on Engineer's Authority and Responsibilities*

A. Neither Engineer's authority or responsibility under this Article 10 or under any other provision of the Contract, nor any decision made by Engineer in good faith either to exercise or not exercise such authority or responsibility or the undertaking, exercise, or performance of any authority or responsibility by Engineer, shall create, impose, or give rise to any duty in contract, tort, or otherwise owed by Engineer to Contractor, any Subcontractor, any Supplier, any other individual or entity, or to any surety for or employee or agent of any of them.

B. Engineer will not supervise, direct, control, or have authority over or be responsible for Contractor's means, methods, techniques, sequences, or procedures of construction, or the safety precautions and programs incident thereto, or for any failure of Contractor to comply with Laws and Regulations applicable to the performance of the Work. Engineer will not be responsible for Contractor's failure to perform the Work in accordance with the Contract Documents.

C. Engineer will not be responsible for the acts or omissions of Contractor or of any Subcontractor, any Supplier, or of any other individual or entity performing any of the Work.

D. Engineer's review of the final Application for Payment and accompanying documentation and all maintenance and operating instructions, schedules, guarantees, bonds, certificates of inspection, tests and approvals, and other documentation required to be delivered by Paragraph 15.06.A will only be to determine generally that their content complies with the requirements of, and in the case of certificates of inspections, tests, and approvals, that the results certified indicate compliance with the Contract Documents.

E. The limitations upon authority and responsibility set forth in this Paragraph 10.08 shall also apply to the Resident Project Representative, if any.

10.9 *Compliance with Safety Program*

A. While at the Site, Engineer's employees and representatives will comply with the specific applicable requirements of Owner's and Contractor's safety programs (if any) of which Engineer has been informed.

ARTICLE 11 – AMENDING THE CONTRACT DOCUMENTS; CHANGES IN THE WORK

11.1 *Amending and Supplementing Contract Documents*

A. The Contract Documents may be amended or supplemented by a Change Order, a Work Change Directive, or a Field Order.

EJCDC® C-700, Standard General Conditions of the Construction Contract.
Copyright © 2013 National Society of Professional Engineers, American Council of Engineering Companies and American Society of Civil Engineers. All rights reserved.

1. *Change Orders*:

   a. If an amendment or supplement to the Contract Documents includes a change in the Contract Price or the Contract Times, such amendment or supplement must be set forth in a Change Order. A Change Order also may be used to establish amendments and supplements of the Contract Documents that do not affect the Contract Price or Contract Times.

   b. Owner and Contractor may amend those terms and conditions of the Contract Documents that do not involve (1) the performance or acceptability of the Work,
   (2) the design (as set forth in the Drawings, Specifications, or otherwise), or (3) other engineering or technical matters, without the recommendation of the Engineer. Such an amendment shall be set forth in a Change Order.

2. *Work Change Directives*: A Work Change Directive will not change the Contract Price or the Contract Times but is evidence that the parties expect that the modification ordered or documented by a Work Change Directive will be incorporated in a subsequently issued Change Order, following negotiations by the parties as to the Work Change Directive's effect, if any, on the Contract Price and Contract Times; or, if negotiations are unsuccessful, by a determination under the terms of the Contract Documents governing adjustments, expressly including Paragraph 11.04 regarding change of Contract Price. Contractor must submit any Change Proposal seeking an adjustment of the Contract Price or the Contract Times, or both, no later than 30 days after the completion of the Work set out in the Work Change Directive. Owner must submit any Claim seeking an adjustment of the Contract Price or the Contract Times, or both, no later than 60 days after issuance of the Work Change Directive.

3. *Field Orders*: Engineer may authorize minor changes in the Work if the changes do not involve an adjustment in the Contract Price or the Contract Times and are compatible with the design concept of the completed Project as a functioning whole as indicated by the Contract Documents. Such changes will be accomplished by a Field Order and will be binding on Owner and also on Contractor, which shall perform the Work involved promptly. If Contractor believes that a Field Order justifies an adjustment in the Contract Price or Contract Times, or both, then before proceeding with the Work at issue, Contractor shall submit a Change Proposal as provided herein.

11.2 *Owner-Authorized Changes in the Work*

A. Without invalidating the Contract and without notice to any surety, Owner may, at any time or from time to time, order additions, deletions, or revisions in the Work. Such changes shall be supported by Engineer's recommendation, to the extent the change involves the design (as set forth in the Drawings, Specifications, or otherwise), or other engineering or technical matters. Such changes may be accomplished by a Change Order, if Owner and Contractor have agreed as to the effect, if any, of the changes on Contract Times or Contract Price; or by a Work Change Directive. Upon receipt of any such document, Contractor shall promptly proceed with the Work

EJCDC® C-700, Standard General Conditions of the Construction Contract.
Copyright © 2013 National Society of Professional Engineers, American Council of Engineering Companies and American Society of Civil Engineers. All rights reserved.

involved; or, in the case of a deletion in the Work, promptly cease construction activities with respect to such deleted Work. Added or revised Work shall be performed under the applicable conditions of the Contract Documents. Nothing in this paragraph shall obligate Contractor to undertake work that Contractor reasonably concludes cannot be performed in a manner consistent with Contractor's safety obligations under the Contract Documents or Laws and Regulations.

11.3 *Unauthorized Changes in the Work*

A. Contractor shall not be entitled to an increase in the Contract Price or an extension of the Contract Times with respect to any work performed that is not required by the Contract Documents, as amended, modified, or supplemented, except in the case of an emergency as provided in Paragraph 7.15 or in the case of uncovering Work as provided in Paragraph 14.05.

11.4 *Change of Contract Price*

A. The Contract Price may only be changed by a Change Order. Any Change Proposal for an adjustment in the Contract Price shall comply with the provisions of Paragraph 11.06. Any Claim for an adjustment of Contract Price shall comply with the provisions of Article 12.

B. An adjustment in the Contract Price will be determined as follows:

1. where the Work involved is covered by unit prices contained in the Contract Documents, then by application of such unit prices to the quantities of the items involved (subject to the provisions of Paragraph 13.03); or

2. where the Work involved is not covered by unit prices contained in the Contract Documents, then by a mutually agreed lump sum (which may include an allowance for overhead and profit not necessarily in accordance with Paragraph 11.04.C.2); or where the Work involved is not covered by unit prices contained in the Contract Documents and the parties do not reach mutual agreement to a lump sum, then on the basis of the Cost of the Work (determined as provided in Paragraph 13.01) plus a Contractor's fee for overhead and profit (determined as provided in Paragraph 11.04.C).

C. *Contractor's Fee*: When applicable, the Contractor's fee for overhead and profit shall be determined as follows:

1. a mutually acceptable fixed fee; or

2. if a fixed fee is not agreed upon, then a fee based on the following percentages of the various portions of the Cost of the Work:

a. for costs incurred under Paragraphs 13.01.B.1 and 13.01.B.2, the Contractor's fee shall be 15 percent;

b. for costs incurred under Paragraph 13.01.B.3, the Contractor's fee shall be five percent;

c. where one or more tiers of subcontracts are on the basis of Cost of the Work plus a fee and no fixed fee is agreed upon, the intent of Paragraphs 11.01.C.2.a and 11.01.C.2.b is that the Contractor's fee shall be based on:

EJCDC® C-700, Standard General Conditions of the Construction Contract.
Copyright © 2013 National Society of Professional Engineers, American Council of Engineering Companies and American Society of Civil Engineers. All rights reserved.

(1) a fee of 15 percent of the costs incurred under Paragraphs 13.01.A.1 and 13.01.A.2 by the Subcontractor that actually performs the Work, at whatever tier, and (2) with respect to Contractor itself and to any Subcontractors of a tier higher than that of the Subcontractor that actually performs the Work, a fee of five percent of the amount (fee plus underlying costs incurred) attributable to the next lower tier Subcontractor; provided, however, that for any such subcontracted work the maximum total fee to be paid by Owner shall be no greater than 27 percent of the costs incurred by the Subcontractor that actually performs the work;

d. no fee shall be payable on the basis of costs itemized under Paragraphs 13.01.B.4, 13.01.B.5, and 13.01.C;

e. the amount of credit to be allowed by Contractor to Owner for any change which results in a net decrease in cost will be the amount of the actual net decrease in cost plus a deduction in Contractor's fee by an amount equal to five percent of such net decrease; and

f. when both additions and credits are involved in any one change, the adjustment in Contractor's fee shall be computed on the basis of the net change in accordance with Paragraphs 11.04.C.2.a through 11.04.C.2.e, inclusive.

11.5 *Change of Contract Times*

A. The Contract Times may only be changed by a Change Order. Any Change Proposal for an adjustment in the Contract Times shall comply with the provisions of Paragraph 11.06. Any Claim for an adjustment in the Contract Times shall comply with the provisions of Article 12.

B. An adjustment of the Contract Times shall be subject to the limitations set forth in Paragraph 4.05, concerning delays in Contractor's progress.

11.6 *Change Proposals*

A. Contractor shall submit a Change Proposal to Engineer to request an adjustment in the Contract Times or Contract Price; appeal an initial decision by Engineer concerning the requirements of the Contract Documents or relating to the acceptability of the Work under the Contract Documents; contest a set-off against payment due; or seek other relief under the Contract. The Change Proposal shall specify any proposed change in Contract Times or Contract Price, or both, or other proposed relief, and explain the reason for the proposed change, with citations to any governing or applicable provisions of the Contract Documents.

1. *Procedures*: Contractor shall submit each Change Proposal to Engineer promptly (but in no event later than 30 days) after the start of the event giving rise thereto, or after such initial decision. The Contractor shall submit supporting data, including the proposed change in Contract Price or Contract Time (if any), to the Engineer and Owner within 15 days after the submittal of the Change Proposal. The supporting data shall be accompanied by a written statement that the supporting data are accurate and complete, and that any requested time or price adjustment is the entire adjustment to which Contractor believes it is entitled as

EJCDC® C-700, Standard General Conditions of the Construction Contract.
Copyright © 2013 National Society of Professional Engineers, American Council of Engineering Companies and American Society of Civil Engineers. All rights reserved.

a result of said event. Engineer will advise Owner regarding the Change Proposal, and consider any comments or response from Owner regarding the Change Proposal.

2. *Engineer's Action*: Engineer will review each Change Proposal and, within 30 days after receipt of the Contractor's supporting data, either deny the Change Proposal in whole, approve it in whole, or deny it in part and approve it in part. Such actions shall be in writing, with a copy provided to Owner and Contractor. If Engineer does not take action on the Change Proposal within 30 days, then either Owner or Contractor may at any time thereafter submit a letter to the other party indicating that as a result of Engineer's inaction the Change Proposal is deemed denied, thereby commencing the time for appeal of the denial under Article 12.

3. *Binding Decision*: Engineer's decision will be final and binding upon Owner and Contractor, unless Owner or Contractor appeals the decision by filing a Claim under Article 12.

B. *Resolution of Certain Change Proposals*: If the Change Proposal does not involve the design (as set forth in the Drawings, Specifications, or otherwise), the acceptability of the Work, or other engineering or technical matters, then Engineer will notify the parties that the Engineer is unable to resolve the Change Proposal. For purposes of further resolution of such a Change Proposal, such notice shall be deemed a denial, and Contractor may choose to seek resolution under the terms of Article 12.

11.7 *Execution of Change Orders*

A. Owner and Contractor shall execute appropriate Change Orders covering:

1. changes in the Contract Price or Contract Times which are agreed to by the parties, including any undisputed sum or amount of time for Work actually performed in accordance with a Work Change Directive;

2. changes in Contract Price resulting from an Owner set-off, unless Contractor has duly contested such set-off;

3. changes in the Work which are: (a) ordered by Owner pursuant to Paragraph 11.02, (b) required because of Owner's acceptance of defective Work under Paragraph 14.04 or Owner's correction of defective Work under Paragraph 14.07, or (c) agreed to by the parties, subject to the need for Engineer's recommendation if the change in the Work involves the design (as set forth in the Drawings, Specifications, or otherwise), or other engineering or technical matters; and

4. changes in the Contract Price or Contract Times, or other changes, which embody the substance of any final and binding results under Paragraph 11.06, or Article 12.

B. If Owner or Contractor refuses to execute a Change Order that is required to be executed under the terms of this Paragraph 11.07, it shall be deemed to be of full force and effect, as if fully executed.

11.8 *Notification to Surety*

EJCDC® C-700, Standard General Conditions of the Construction Contract.
Copyright © 2013 National Society of Professional Engineers, American Council of Engineering Companies and American Society of Civil Engineers. All rights reserved.

A. If the provisions of any bond require notice to be given to a surety of any change affecting the general scope of the Work or the provisions of the Contract Documents (including, but not limited to, Contract Price or Contract Times), the giving of any such notice will be Contractor's responsibility. The amount of each applicable bond will be adjusted to reflect the effect of any such change.

ARTICLE 12 – CLAIMS

12.1 *Claims*

A. *Claims Process*: The following disputes between Owner and Contractor shall be submitted to the Claims process set forth in this Article:

1. Appeals by Owner or Contractor of Engineer's decisions regarding Change Proposals;

2. Owner demands for adjustments in the Contract Price or Contract Times, or other relief under the Contract Documents; and

3. Disputes that Engineer has been unable to address because they do not involve the design (as set forth in the Drawings, Specifications, or otherwise), the acceptability of the Work, or other engineering or technical matters.

B. *Submittal of Claim*: The party submitting a Claim shall deliver it directly to the other party to the Contract promptly (but in no event later than 30 days) after the start of the event giving rise thereto; in the case of appeals regarding Change Proposals within 30 days of the decision under appeal. The party submitting the Claim shall also furnish a copy to the Engineer, for its information only. The responsibility to substantiate a Claim shall rest with the party making the Claim. In the case of a Claim by Contractor seeking an increase in the Contract Times or Contract Price, or both, Contractor shall certify that the Claim is made in good faith, that the supporting data are accurate and complete, and that to the best of Contractor's knowledge and belief the amount of time or money requested accurately reflects the full amount to which Contractor is entitled.

C. *Review and Resolution*: The party receiving a Claim shall review it thoroughly, giving full consideration to its merits. The two parties shall seek to resolve the Claim through the exchange of information and direct negotiations. The parties may extend the time for resolving the Claim by mutual agreement. All actions taken on a Claim shall be stated in writing and submitted to the other party, with a copy to Engineer.

D. *Mediation*:

1. At any time after initiation of a Claim, Owner and Contractor may mutually agree to mediation of the underlying dispute. The agreement to mediate shall stay the Claim submittal and response process.

2. If Owner and Contractor agree to mediation, then after 60 days from such agreement, either Owner or Contractor may unilaterally terminate the mediation process, and the Claim submittal and decision process shall resume as of the date of the termination. If the mediation proceeds but is unsuccessful in resolving the

EJCDC® C-700, Standard General Conditions of the Construction Contract.
Copyright © 2013 National Society of Professional Engineers, American Council of Engineering Companies and American Society of Civil Engineers. All rights reserved.

dispute, the Claim submittal and decision process shall resume as of the date of the conclusion of the mediation, as determined by the mediator.

3. Owner and Contractor shall each pay one-half of the mediator's fees and costs.

E. *Partial Approval*: If the party receiving a Claim approves the Claim in part and denies it in part, such action shall be final and binding unless within 30 days of such action the other party invokes the procedure set forth in Article 17 for final resolution of disputes.

F. *Denial of Claim*: If efforts to resolve a Claim are not successful, the party receiving the Claim may deny it by giving written notice of denial to the other party. If the receiving party does not take action on the Claim within 90 days, then either Owner or Contractor may at any time thereafter submit a letter to the other party indicating that as a result of the inaction, the Claim is deemed denied, thereby commencing the time for appeal of the denial. A denial of the Claim shall be final and binding unless within 30 days of the denial the other party invokes the procedure set forth in Article 17 for the final resolution of disputes.

G. *Final and Binding Results*: If the parties reach a mutual agreement regarding a Claim, whether through approval of the Claim, direct negotiations, mediation, or otherwise; or if a Claim is approved in part and denied in part, or denied in full, and such actions become final and binding; then the results of the agreement or action on the Claim shall be incorporated in a Change Order to the extent they affect the Contract, including the Work, the Contract Times, or the Contract Price.

ARTICLE 13 – COST OF THE WORK; ALLOWANCES; UNIT PRICE WORK

13.1 *Cost of the Work*

A. *Purposes for Determination of Cost of the Work*: The term Cost of the Work means the sum of all costs necessary for the proper performance of the Work at issue, as further defined below. The provisions of this Paragraph 13.01 are used for two distinct purposes:

1. To determine Cost of the Work when Cost of the Work is a component of the Contract Price, under cost-plus-fee, time-and-materials, or other cost-based terms; or

2. To determine the value of a Change Order, Change Proposal, Claim, set-off, or other adjustment in Contract Price. When the value of any such adjustment is determined on the basis of Cost of the Work, Contractor is entitled only to those additional or incremental costs required because of the change in the Work or because of the event giving rise to the adjustment.

B. *Costs Included*: Except as otherwise may be agreed to in writing by Owner, costs included in the Cost of the Work shall be in amounts no higher than those prevailing in the locality of the Project, shall not include any of the costs itemized in Paragraph 13.01.C, and shall include only the following items:

1. Payroll costs for employees in the direct employ of Contractor in the performance of the Work under schedules of job classifications agreed upon by

Copyright © 2013 National Society of Professional Engineers, American Council of Engineering Companies and American Society of Civil Engineers. All rights reserved.

Owner and Contractor. Such employees shall include, without limitation, superintendents, foremen, and other personnel employed full time on the Work. Payroll costs for employees not employed full time on the Work shall be apportioned on the basis of their time spent on the Work. Payroll costs shall include, but not be limited to, salaries and wages plus the cost of fringe benefits, which shall include social security contributions, unemployment, excise, and payroll taxes, workers' compensation, health and retirement benefits, bonuses, sick leave, and vacation and holiday pay applicable thereto. The expenses of performing Work outside of regular working hours, on Saturday, Sunday, or legal holidays, shall be included in the above to the extent authorized by Owner.

2. Cost of all materials and equipment furnished and incorporated in the Work, including costs of transportation and storage thereof, and Suppliers' field services required in connection therewith. All cash discounts shall accrue to Contractor unless Owner deposits funds with Contractor with which to make payments, in which case the cash discounts shall accrue to Owner. All trade discounts, rebates, and refunds and returns from sale of surplus materials and equipment shall accrue to Owner, and Contractor shall make provisions so that they may be obtained.

3. Payments made by Contractor to Subcontractors for Work performed by Subcontractors. If required by Owner, Contractor shall obtain competitive bids from subcontractors acceptable to Owner and Contractor and shall deliver such bids to Owner, who will then determine, with the advice of Engineer, which bids, if any, will be acceptable. If any subcontract provides that the Subcontractor is to be paid on the basis of Cost of the Work plus a fee, the Subcontractor's Cost of the Work and fee shall be determined in the same manner as Contractor's Cost of the Work and fee as provided in this Paragraph 13.01.

4. Costs of special consultants (including but not limited to engineers, architects, testing laboratories, surveyors, attorneys, and accountants) employed for services specifically related to the Work.

5. Supplemental costs including the following:

   a. The proportion of necessary transportation, travel, and subsistence expenses of Contractor's employees incurred in discharge of duties connected with the Work.

   b. Cost, including transportation and maintenance, of all materials, supplies, equipment, machinery, appliances, office, and temporary facilities at the Site, and hand tools not owned by the workers, which are consumed in the performance of the Work, and cost, less market value, of such items used but not consumed which remain the property of Contractor.

   c. Rentals of all construction equipment and machinery, and the parts thereof, whether rented from Contractor or others in accordance with rental agreements approved by Owner with the advice of Engineer, and the costs of transportation, loading, unloading, assembly, dismantling, and removal thereof. All such costs shall be in accordance with the terms of said rental agreements. The rental of any such equipment, machinery, or parts shall

Copyright © 2013 National Society of Professional Engineers, American Council of Engineering Companies and American Society of Civil Engineers. All rights reserved.

cease when the use thereof is no longer necessary for the Work.

d. Sales, consumer, use, and other similar taxes related to the Work, and for which Contractor is liable, as imposed by Laws and Regulations.

e. Deposits lost for causes other than negligence of Contractor, any Subcontractor, or anyone directly or indirectly employed by any of them or for whose acts any of them may be liable, and royalty payments and fees for permits and licenses.

f. Losses and damages (and related expenses) caused by damage to the Work, not compensated by insurance or otherwise, sustained by Contractor in connection with the performance of the Work (except losses and damages within the deductible amounts of property insurance established in accordance with Paragraph 6.05), provided such losses and damages have resulted from causes other than the negligence of Contractor, any Subcontractor, or anyone directly or indirectly employed by any of them or for whose acts any of them may be liable. Such losses shall include settlements made with the written consent and approval of Owner. No such losses, damages, and expenses shall be included in the Cost of the Work for the purpose of determining Contractor's fee.

g. The cost of utilities, fuel, and sanitary facilities at the Site.

h. Minor expenses such as communication service at the Site, express and courier services, and similar petty cash items in connection with the Work.

i. The costs of premiums for all bonds and insurance that Contractor is required by the Contract Documents to purchase and maintain.

C. *Costs Excluded*: The term Cost of the Work shall not include any of the following items:

1. Payroll costs and other compensation of Contractor's officers, executives, principals (of partnerships and sole proprietorships), general managers, safety managers, engineers, architects, estimators, attorneys, auditors, accountants, purchasing and contracting agents, expediters, timekeepers, clerks, and other personnel employed by Contractor, whether at the Site or in Contractor's principal or branch office for general administration of the Work and not specifically included in the agreed upon schedule of job classifications referred to in Paragraph 13.01.B.1 or specifically covered by Paragraph 13.01.B.4. The payroll costs and other compensation excluded here are to be considered administrative costs covered by the Contractor's fee.

2. Expenses of Contractor's principal and branch offices other than Contractor's office at the Site.

3. Any part of Contractor's capital expenses, including interest on Contractor's capital employed for the Work and charges against Contractor for delinquent payments.

4. Costs due to the negligence of Contractor, any Subcontractor, or anyone directly or indirectly employed by any of them or for whose acts any of them

EJCDC® C-700, Standard General Conditions of the Construction Contract.
Copyright © 2013 National Society of Professional Engineers, American Council of Engineering Companies and American Society of Civil Engineers. All rights reserved.

may be liable, including but not limited to, the correction of defective Work, disposal of materials or equipment wrongly supplied, and making good any damage to property.

5. Other overhead or general expense costs of any kind and the costs of any item not specifically and expressly included in Paragraph 13.01.B.

D. *Contractor's Fee*: When the Work as a whole is performed on the basis of cost-plus, Contractor's fee shall be determined as set forth in the Agreement. When the value of any Work covered by a Change Order, Change Proposal, Claim, set-off, or other adjustment in Contract Price is determined on the basis of Cost of the Work, Contractor's fee shall be determined as set forth in Paragraph 11.04.C.

E. *Documentation*: Whenever the Cost of the Work for any purpose is to be determined pursuant to this Article 13, Contractor will establish and maintain records thereof in accordance with generally accepted accounting practices and submit in a form acceptable to Engineer an itemized cost breakdown together with supporting data.

13.2 *Allowances*

A. It is understood that Contractor has included in the Contract Price all allowances so named in the Contract Documents and shall cause the Work so covered to be performed for such sums and by such persons or entities as may be acceptable to Owner and Engineer.

B. *Cash Allowances*: Contractor agrees that:

1. the cash allowances include the cost to Contractor (less any applicable trade discounts) of materials and equipment required by the allowances to be delivered at the Site, and all applicable taxes; and

2. Contractor's costs for unloading and handling on the Site, labor, installation, overhead, profit, and other expenses contemplated for the cash allowances have been included in the Contract Price and not in the allowances, and no demand for additional payment on account of any of the foregoing will be valid.

C. *Contingency Allowance*: Contractor agrees that a contingency allowance, if any, is for the sole use of Owner to cover unanticipated costs.

D. Prior to final payment, an appropriate Change Order will be issued as recommended by Engineer to reflect actual amounts due Contractor on account of Work covered by allowances, and the Contract Price shall be correspondingly adjusted.

13.3 *Unit Price Work*

A. Where the Contract Documents provide that all or part of the Work is to be Unit Price Work, initially the Contract Price will be deemed to include for all Unit Price Work an amount equal to the sum of the unit price for each separately identified item of Unit Price Work times the estimated quantity of each item as indicated in the Agreement.

B. The estimated quantities of items of Unit Price Work are not guaranteed and are

EJCDC® C-700, Standard General Conditions of the Construction Contract.
Copyright © 2013 National Society of Professional Engineers, American Council of Engineering Companies and American Society of Civil Engineers. All rights reserved.

solely for the purpose of comparison of Bids and determining an initial Contract Price. Payments to Contractor for Unit Price Work will be based on actual quantities.

C. Each unit price will be deemed to include an amount considered by Contractor to be adequate to cover Contractor's overhead and profit for each separately identified item.

D. Engineer will determine the actual quantities and classifications of Unit Price Work performed by Contractor. Engineer will review with Contractor the Engineer's preliminary determinations on such matters before rendering a written decision thereon (by recommendation of an Application for Payment or otherwise). Engineer's written decision thereon will be final and binding (except as modified by Engineer to reflect changed factual conditions or more accurate data) upon Owner and Contractor, subject to the provisions of the following paragraph.

E. Within 30 days of Engineer's written decision under the preceding paragraph, Contractor may submit a Change Proposal, or Owner may file a Claim, seeking an adjustment in the Contract Price if:

1. the quantity of any item of Unit Price Work performed by Contractor differs materially and significantly from the estimated quantity of such item indicated in the Agreement;

2. there is no corresponding adjustment with respect to any other item of Work; and

3. Contractor believes that it is entitled to an increase in Contract Price as a result of having incurred additional expense or Owner believes that Owner is entitled to a decrease in Contract Price, and the parties are unable to agree as to the amount of any such increase or decrease.

ARTICLE 14 – TESTS AND INSPECTIONS; CORRECTION, REMOVAL OR ACCEPTANCE OF DEFECTIVE WORK

14.1 *Access to Work*

A. Owner, Engineer, their consultants and other representatives and personnel of Owner, independent testing laboratories, and authorities having jurisdiction will have access to the Site and the Work at reasonable times for their observation, inspection, and testing. Contractor shall provide them proper and safe conditions for such access and advise them of Contractor's safety procedures and programs so that they may comply therewith as applicable.

14.2 *Tests, Inspections, and Approvals*

A. Contractor shall give Engineer timely notice of readiness of the Work (or specific parts thereof) for all required inspections and tests, and shall cooperate with inspection and testing personnel to facilitate required inspections and tests.

B. Owner shall retain and pay for the services of an independent inspector, testing laboratory, or other qualified individual or entity to perform all inspections and tests expressly required by the Contract Documents to be furnished and paid for by Owner, except that costs incurred in connection with tests or inspections of covered Work

EJCDC® C-700, Standard General Conditions of the Construction Contract.
Copyright © 2013 National Society of Professional Engineers, American Council of Engineering Companies and American Society of Civil Engineers. All rights reserved.

shall be governed by the provisions of Paragraph 14.05.

C. If Laws or Regulations of any public body having jurisdiction require any Work (or part thereof) specifically to be inspected, tested, or approved by an employee or other representative of such public body, Contractor shall assume full responsibility for arranging and obtaining such inspections, tests, or approvals, pay all costs in connection therewith, and furnish Engineer the required certificates of inspection or approval.

D. Contractor shall be responsible for arranging, obtaining, and paying for all inspections and tests required:

1. by the Contract Documents, unless the Contract Documents expressly allocate responsibility for a specific inspection or test to Owner;

2. to attain Owner's and Engineer's acceptance of materials or equipment to be incorporated in the Work;

3. by manufacturers of equipment furnished under the Contract Documents;

4. for testing, adjusting, and balancing of mechanical, electrical, and other equipment to be incorporated into the Work; and

5. for acceptance of materials, mix designs, or equipment submitted for approval prior to Contractor's purchase thereof for incorporation in the Work.

Such inspections and tests shall be performed by independent inspectors, testing laboratories, or other qualified individuals or entities acceptable to Owner and Engineer.

E. If the Contract Documents require the Work (or part thereof) to be approved by Owner, Engineer, or another designated individual or entity, then Contractor shall assume full responsibility for arranging and obtaining such approvals.

F. If any Work (or the work of others) that is to be inspected, tested, or approved is covered by Contractor without written concurrence of Engineer, Contractor shall, if requested by Engineer, uncover such Work for observation. Such uncovering shall be at Contractor's expense unless Contractor had given Engineer timely notice of Contractor's intention to cover the same and Engineer had not acted with reasonable promptness in response to such notice.

14.3 *Defective Work*

A. *Contractor's Obligation*: It is Contractor's obligation to assure that the Work is not defective.

B. *Engineer's Authority*: Engineer has the authority to determine whether Work is defective, and to reject defective Work.

C. *Notice of Defects*: Prompt notice of all defective Work of which Owner or Engineer has actual knowledge will be given to Contractor.

D. *Correction, or Removal and Replacement*: Promptly after receipt of written notice of defective Work, Contractor shall correct all such defective Work, whether or not fabricated, installed, or completed, or, if Engineer has rejected the defective Work,

EJCDC® C-700, Standard General Conditions of the Construction Contract.
Copyright © 2013 National Society of Professional Engineers, American Council of Engineering Companies and American Society of Civil Engineers. All rights reserved.

remove it from the Project and replace it with Work that is not defective.

E. *Preservation of Warranties*: When correcting defective Work, Contractor shall take no action that would void or otherwise impair Owner's special warranty and guarantee, if any, on said Work.

F. *Costs and Damages*: In addition to its correction, removal, and replacement obligations with respect to defective Work, Contractor shall pay all claims, costs, losses, and damages arising out of or relating to defective Work, including but not limited to the cost of the inspection, testing, correction, removal, replacement, or reconstruction of such defective Work, fines levied against Owner by governmental authorities because the Work is defective, and the costs of repair or replacement of work of others resulting from defective Work. Prior to final payment, if Owner and Contractor are unable to agree as to the measure of such claims, costs, losses, and damages resulting from defective Work, then Owner may impose a reasonable set-off against payments due under Article 15.

14.4 *Acceptance of Defective Work*

A. If, instead of requiring correction or removal and replacement of defective Work, Owner prefers to accept it, Owner may do so (subject, if such acceptance occurs prior to final payment, to Engineer's confirmation that such acceptance is in general accord with the design intent and applicable engineering principles, and will not endanger public safety). Contractor shall pay all claims, costs, losses, and damages attributable to Owner's evaluation of and determination to accept such defective Work (such costs to be approved by Engineer as to reasonableness), and for the diminished value of the Work to the extent not otherwise paid by Contractor. If any such acceptance occurs prior to final payment, the necessary revisions in the Contract Documents with respect to the Work shall be incorporated in a Change Order. If the parties are unable to agree as to the decrease in the Contract Price, reflecting the diminished value of Work so accepted, then Owner may impose a reasonable set-off against payments due under Article 15. If the acceptance of defective Work occurs after final payment, Contractor shall pay an appropriate amount to Owner.

14.5 *Uncovering Work*

A. Engineer has the authority to require special inspection or testing of the Work, whether or not the Work is fabricated, installed, or completed.

B. If any Work is covered contrary to the written request of Engineer, then Contractor shall, if requested by Engineer, uncover such Work for Engineer's observation, and then replace the covering, all at Contractor's expense.

C. If Engineer considers it necessary or advisable that covered Work be observed by Engineer or inspected or tested by others, then Contractor, at Engineer's request, shall uncover, expose, or otherwise make available for observation, inspection, or testing as Engineer may require, that portion of the Work in question, and provide all necessary labor, material, and equipment.

1. If it is found that the uncovered Work is defective, Contractor shall be responsible for all claims, costs, losses, and damages arising out of or relating

EJCDC® C-700, Standard General Conditions of the Construction Contract.
Copyright © 2013 National Society of Professional Engineers, American Council of Engineering Companies and American Society of Civil Engineers. All rights reserved.

to such uncovering, exposure, observation, inspection, and testing, and of satisfactory replacement or reconstruction (including but not limited to all costs of repair or replacement of work of others); and pending Contractor's full discharge of this responsibility the Owner shall be entitled to impose a reasonable set-off against payments due under Article 15.

2. If the uncovered Work is not found to be defective, Contractor shall be allowed an increase in the Contract Price or an extension of the Contract Times, or both, directly attributable to such uncovering, exposure, observation, inspection, testing, replacement, and reconstruction. If the parties are unable to agree as to the amount or extent thereof, then Contractor may submit a Change Proposal within 30 days of the determination that the Work is not defective.

14.6 *Owner May Stop the Work*

A. If the Work is defective, or Contractor fails to supply sufficient skilled workers or suitable materials or equipment, or fails to perform the Work in such a way that the completed Work will conform to the Contract Documents, then Owner may order Contractor to stop the Work, or any portion thereof, until the cause for such order has been eliminated; however, this right of Owner to stop the Work shall not give rise to any duty on the part of Owner to exercise this right for the benefit of Contractor, any Subcontractor, any Supplier, any other individual or entity, or any surety for, or employee or agent of any of them.

14.7 *Owner May Correct Defective Work*

A. If Contractor fails within a reasonable time after written notice from Engineer to correct defective Work, or to remove and replace rejected Work as required by Engineer, or if Contractor fails to perform the Work in accordance with the Contract Documents, or if Contractor fails to comply with any other provision of the Contract Documents, then Owner may, after seven days written notice to Contractor, correct or remedy any such deficiency.

B. In exercising the rights and remedies under this Paragraph 14.07, Owner shall proceed expeditiously. In connection with such corrective or remedial action, Owner may exclude Contractor from all or part of the Site, take possession of all or part of the Work and suspend Contractor's services related thereto, and incorporate in the Work all materials and equipment stored at the Site or for which Owner has paid Contractor but which are stored elsewhere. Contractor shall allow Owner, Owner's representatives, agents and employees, Owner's other contractors, and Engineer and Engineer's consultants access to the Site to enable Owner to exercise the rights and remedies under this paragraph.

C. All claims, costs, losses, and damages incurred or sustained by Owner in exercising the rights and remedies under this Paragraph 14.07 will be charged against Contractor as set-offs against payments due under Article 15. Such claims, costs, losses and damages will include but not be limited to all costs of repair, or replacement of work of others destroyed or damaged by correction, removal, or replacement of Contractor's defective Work.

D. Contractor shall not be allowed an extension of the Contract Times because of any delay in the performance of the Work attributable to the exercise by Owner of

Copyright © 2013 National Society of Professional Engineers, American Council of Engineering Companies and American Society of Civil Engineers. All rights reserved.

Owner's rights and remedies under this Paragraph 14.07.

ARTICLE 15 – PAYMENTS TO CONTRACTOR; SET-OFFS; COMPLETION; CORRECTION PERIOD

15.1 *Progress Payments*

A. *Basis for Progress Payments*: The Schedule of Values established as provided in Article 2 will serve as the basis for progress payments and will be incorporated into a form of Application for Payment acceptable to Engineer. Progress payments on account of Unit Price Work will be based on the number of units completed during the pay period, as determined under the provisions of Paragraph 13.03. Progress payments for cost-based Work will be based on Cost of the Work completed by Contractor during the pay period.

B. *Applications for Payments*:

1. At least 20 days before the date established in the Agreement for each progress payment (but not more often than once a month), Contractor shall submit to Engineer for review an Application for Payment filled out and signed by Contractor covering the Work completed as of the date of the Application and accompanied by such supporting documentation as is required by the Contract Documents. If payment is requested on the basis of materials and equipment not incorporated in the Work but delivered and suitably stored at the Site or at another location agreed to in writing, the Application for Payment shall also be accompanied by a bill of sale, invoice, or other documentation warranting that Owner has received the materials and equipment free and clear of all Liens, and evidence that the materials and equipment are covered by appropriate property insurance, a warehouse bond, or other arrangements to protect Owner's interest therein, all of which must be satisfactory to Owner.

2. Beginning with the second Application for Payment, each Application shall include an affidavit of Contractor stating that all previous progress payments received on account of the Work have been applied on account to discharge Contractor's legitimate obligations associated with prior Applications for Payment.

3. The amount of retainage with respect to progress payments will be as stipulated in the Agreement.

C. *Review of Applications*:

1. Engineer will, within 10 days after receipt of each Application for Payment, including each resubmittal, either indicate in writing a recommendation of payment and present the Application to Owner, or return the Application to Contractor indicating in writing Engineer's reasons for refusing to recommend payment. In the latter case, Contractor may make the necessary corrections and resubmit the Application.

2. Engineer's recommendation of any payment requested in an Application for Payment will constitute a representation by Engineer to Owner, based on

EJCDC® C-700, Standard General Conditions of the Construction Contract.
Copyright © 2013 National Society of Professional Engineers, American Council of Engineering Companies and American Society of Civil Engineers. All rights reserved.

Engineer's observations of the executed Work as an experienced and qualified design professional, and on Engineer's review of the Application for Payment and the accompanying data and schedules, that to the best of Engineer's knowledge, information and belief:

a. the Work has progressed to the point indicated;

b. the quality of the Work is generally in accordance with the Contract Documents (subject to an evaluation of the Work as a functioning whole prior to or upon Substantial Completion, the results of any subsequent tests called for in the Contract Documents, a final determination of quantities and classifications for Unit Price Work under Paragraph 13.03, and any other qualifications stated in the recommendation); and

c. the conditions precedent to Contractor's being entitled to such payment appear to have been fulfilled in so far as it is Engineer's responsibility to observe the Work.

3. By recommending any such payment Engineer will not thereby be deemed to have represented that:

a. inspections made to check the quality or the quantity of the Work as it has been performed have been exhaustive, extended to every aspect of the Work in progress, or involved detailed inspections of the Work beyond the responsibilities specifically assigned to Engineer in the Contract; or

b. there may not be other matters or issues between the parties that might entitle Contractor to be paid additionally by Owner or entitle Owner to withhold payment to Contractor.

4. Neither Engineer's review of Contractor's Work for the purposes of recommending payments nor Engineer's recommendation of any payment, including final payment, will impose responsibility on Engineer:

a. to supervise, direct, or control the Work, or

b. for the means, methods, techniques, sequences, or procedures of construction, or the safety precautions and programs incident thereto, or

c. for Contractor's failure to comply with Laws and Regulations applicable to Contractor's performance of the Work, or

d. to make any examination to ascertain how or for what purposes Contractor has used the money paid on account of the Contract Price, or

e. to determine that title to any of the Work, materials, or equipment has passed to Owner free and clear of any Liens.

5. Engineer may refuse to recommend the whole or any part of any payment if, in Engineer's opinion, it would be incorrect to make the representations to Owner stated in Paragraph 15.01.C.2.

6. Engineer will recommend reductions in payment (set-offs) necessary in Engineer's opinion to protect Owner from loss because:

Copyright © 2013 National Society of Professional Engineers, American Council of Engineering Companies and American Society of Civil Engineers. All rights reserved.

a. the Work is defective, requiring correction or replacement;

b. the Contract Price has been reduced by Change Orders;

c. Owner has been required to correct defective Work in accordance with Paragraph 14.07, or has accepted defective Work pursuant to Paragraph 14.04;

d. Owner has been required to remove or remediate a Hazardous Environmental Condition for which Contractor is responsible; or

e. Engineer has actual knowledge of the occurrence of any of the events that would constitute a default by Contractor and therefore justify termination for cause under the Contract Documents.

D. *Payment Becomes Due*:

1. Ten days after presentation of the Application for Payment to Owner with Engineer's recommendation, the amount recommended (subject to any Owner set-offs) will become due, and when due will be paid by Owner to Contractor.

E. *Reductions in Payment by Owner*:

1. In addition to any reductions in payment (set-offs) recommended by Engineer, Owner is entitled to impose a set-off against payment based on any of the following:

a. claims have been made against Owner on account of Contractor's conduct in the performance or furnishing of the Work, or Owner has incurred costs, losses, or damages on account of Contractor's conduct in the performance or furnishing of the Work, including but not limited to claims, costs, losses, or damages from workplace injuries, adjacent property damage, non-compliance with Laws and Regulations, and patent infringement;

b. Contractor has failed to take reasonable and customary measures to avoid damage, delay, disruption, and interference with other work at or adjacent to the Site;

c. Contractor has failed to provide and maintain required bonds or insurance;

d. Owner has been required to remove or remediate a Hazardous Environmental Condition for which Contractor is responsible;

e. Owner has incurred extra charges or engineering costs related to submittal reviews, evaluations of proposed substitutes, tests and inspections, or return visits to manufacturing or assembly facilities;

f. the Work is defective, requiring correction or replacement;

g. Owner has been required to correct defective Work in accordance with Paragraph 14.07, or has accepted defective Work pursuant to Paragraph 14.04;

h. the Contract Price has been reduced by Change Orders;

i. an event that would constitute a default by Contractor and therefore justify a termination for cause has occurred;

Copyright © 2013 National Society of Professional Engineers, American Council of Engineering Companies and American Society of Civil Engineers. All rights reserved.

j. liquidated damages have accrued as a result of Contractor's failure to achieve Milestones, Substantial Completion, or final completion of the Work;

k. Liens have been filed in connection with the Work, except where Contractor has delivered a specific bond satisfactory to Owner to secure the satisfaction and discharge of such Liens;

l. there are other items entitling Owner to a set off against the amount recommended.

2. If Owner imposes any set-off against payment, whether based on its own knowledge or on the written recommendations of Engineer, Owner will give Contractor immediate written notice (with a copy to Engineer) stating the reasons for such action and the specific amount of the reduction, and promptly pay Contractor any amount remaining after deduction of the amount so withheld. Owner shall promptly pay Contractor the amount so withheld, or any adjustment thereto agreed to by Owner and Contractor, if Contractor remedies the reasons for such action. The reduction imposed shall be binding on Contractor unless it duly submits a Change Proposal contesting the reduction.

3. Upon a subsequent determination that Owner's refusal of payment was not justified, the amount wrongfully withheld shall be treated as an amount due as determined by Paragraph 15.01.C.1 and subject to interest as provided in the Agreement.

15.2 *Contractor's Warranty of Title*

A. Contractor warrants and guarantees that title to all Work, materials, and equipment furnished under the Contract will pass to Owner free and clear of (1) all Liens and other title defects, and (2) all patent, licensing, copyright, or royalty obligations, no later than seven days after the time of payment by Owner.

15.3 *Substantial Completion*

A. When Contractor considers the entire Work ready for its intended use Contractor shall notify Owner and Engineer in writing that the entire Work is substantially complete and request that Engineer issue a certificate of Substantial Completion. Contractor shall at the same time submit to Owner and Engineer an initial draft of punch list items to be completed or corrected before final payment.

B. Promptly after Contractor's notification, Owner, Contractor, and Engineer shall make an inspection of the Work to determine the status of completion. If Engineer does not consider the Work substantially complete, Engineer will notify Contractor in writing giving the reasons therefor.

C. If Engineer considers the Work substantially complete, Engineer will deliver to Owner a preliminary certificate of Substantial Completion which shall fix the date of Substantial Completion. Engineer shall attach to the certificate a punch list of items to be completed or corrected before final payment. Owner shall have seven days after receipt of the preliminary certificate during which to make written objection to Engineer as to any provisions of the certificate or attached punch list. If, after considering the objections to the provisions of the preliminary certificate,

EJCDC® C-700, Standard General Conditions of the Construction Contract.
Copyright © 2013 National Society of Professional Engineers, American Council of Engineering Companies and American Society of Civil Engineers. All rights reserved.

Engineer concludes that the Work is not substantially complete, Engineer will, within 14 days after submission of the preliminary certificate to Owner, notify Contractor in writing that the Work is not substantially complete, stating the reasons therefor. If Owner does not object to the provisions of the certificate, or if despite consideration of Owner's objections Engineer concludes that the Work is substantially complete, then Engineer will, within said 14 days, execute and deliver to Owner and Contractor a final certificate of Substantial Completion (with a revised punch list of items to be completed or corrected) reflecting such changes from the preliminary certificate as Engineer believes justified after consideration of any objections from Owner.

D. At the time of receipt of the preliminary certificate of Substantial Completion, Owner and Contractor will confer regarding Owner's use or occupancy of the Work following Substantial Completion, review the builder's risk insurance policy with respect to the end of the builder's risk coverage, and confirm the transition to coverage of the Work under a permanent property insurance policy held by Owner. Unless Owner and Contractor agree otherwise in writing, Owner shall bear responsibility for security, operation, protection of the Work, property insurance, maintenance, heat, and utilities upon Owner's use or occupancy of the Work.

E. After Substantial Completion the Contractor shall promptly begin work on the punch list of items to be completed or corrected prior to final payment. In appropriate cases Contractor may submit monthly Applications for Payment for completed punch list items, following the progress payment procedures set forth above.

F. Owner shall have the right to exclude Contractor from the Site after the date of Substantial Completion subject to allowing Contractor reasonable access to remove its property and complete or correct items on the punch list.

15.4 *Partial Use or Occupancy*

A. Prior to Substantial Completion of all the Work, Owner may use or occupy any substantially completed part of the Work which has specifically been identified in the Contract Documents, or which Owner, Engineer, and Contractor agree constitutes a separately functioning and usable part of the Work that can be used by Owner for its intended purpose without significant interference with Contractor's performance of the remainder of the Work, subject to the following conditions:

1. At any time Owner may request in writing that Contractor permit Owner to use or occupy any such part of the Work that Owner believes to be substantially complete. If and when Contractor agrees that such part of the Work is substantially complete, Contractor, Owner, and Engineer will follow the procedures of Paragraph 15.03.A through E for that part of the Work.

2. At any time Contractor may notify Owner and Engineer in writing that Contractor considers any such part of the Work substantially complete and request Engineer to issue a certificate of Substantial Completion for that part of the Work.

3. Within a reasonable time after either such request, Owner, Contractor, and Engineer shall make an inspection of that part of the Work to determine its status of completion. If Engineer does not consider that part of the Work to be

Copyright © 2013 National Society of Professional Engineers, American Council of Engineering Companies and American Society of Civil Engineers. All rights reserved.

substantially complete, Engineer will notify Owner and Contractor in writing giving the reasons therefor. If Engineer considers that part of the Work to be substantially complete, the provisions of Paragraph 15.03 will apply with respect to certification of Substantial Completion of that part of the Work and the division of responsibility in respect thereof and access thereto.

4. No use or occupancy or separate operation of part of the Work may occur prior to compliance with the requirements of Paragraph 6.05 regarding builder's risk or other property insurance.

15.5 *Final Inspection*

A. Upon written notice from Contractor that the entire Work or an agreed portion thereof is complete, Engineer will promptly make a final inspection with Owner and Contractor and will notify Contractor in writing of all particulars in which this inspection reveals that the Work, or agreed portion thereof, is incomplete or defective. Contractor shall immediately take such measures as are necessary to complete such Work or remedy such deficiencies.

15.6 *Final Payment*

A. *Application for Payment*:

1. After Contractor has, in the opinion of Engineer, satisfactorily completed all corrections identified during the final inspection and has delivered, in accordance with the Contract Documents, all maintenance and operating instructions, schedules, guarantees, bonds, certificates or other evidence of insurance, certificates of inspection, annotated record documents (as provided in Paragraph 7.11), and other documents, Contractor may make application for final payment.
2. The final Application for Payment shall be accompanied (except as previously delivered) by:

   a. all documentation called for in the Contract Documents;

   b. consent of the surety, if any, to final payment;

   c. satisfactory evidence that all title issues have been resolved such that title to all Work, materials, and equipment has passed to Owner free and clear of any Liens or other title defects, or will so pass upon final payment.

   d. a list of all disputes that Contractor believes are unsettled; and

   e. complete and legally effective releases or waivers (satisfactory to Owner) of all Lien rights arising out of the Work, and of Liens filed in connection with the Work.

3. In lieu of the releases or waivers of Liens specified in Paragraph 15.06.A.2 and as approved by Owner, Contractor may furnish receipts or releases in full and an affidavit of Contractor that: (a) the releases and receipts include all labor, services, material, and equipment for which a Lien could be filed; and (b) all payrolls, material and equipment bills, and other indebtedness connected with the Work for which Owner might in any way be responsible, or which might

EJCDC® C-700, Standard General Conditions of the Construction Contract.
Copyright © 2013 National Society of Professional Engineers, American Council of Engineering Companies and American Society of Civil Engineers. All rights reserved.

in any way result in liens or other burdens on Owner's property, have been paid or otherwise satisfied. If any Subcontractor or Supplier fails to furnish such a release or receipt in full, Contractor may furnish a bond or other collateral satisfactory to Owner to indemnify Owner against any Lien, or Owner at its option may issue joint checks payable to Contractor and specified Subcontractors and Suppliers.

B. *Engineer's Review of Application and Acceptance*:

1. If, on the basis of Engineer's observation of the Work during construction and final inspection, and Engineer's review of the final Application for Payment and accompanying documentation as required by the Contract Documents, Engineer is satisfied that the Work has been completed and Contractor's other obligations under the Contract have been fulfilled, Engineer will, within ten days after receipt of the final Application for Payment, indicate in writing Engineer's recommendation of final payment and present the Application for Payment to Owner for payment. Such recommendation shall account for any set-offs against payment that are necessary in Engineer's opinion to protect Owner from loss for the reasons stated above with respect to progress payments. At the same time Engineer will also give written notice to Owner and Contractor that the Work is acceptable, subject to the provisions of Paragraph 15.07. Otherwise, Engineer will return the Application for Payment to Contractor, indicating in writing the reasons for refusing to recommend final payment, in which case Contractor shall make the necessary corrections and resubmit the Application for Payment.

C. *Completion of Work*: The Work is complete (subject to surviving obligations) when it is ready for final payment as established by the Engineer's written recommendation of final payment.

D. *Payment Becomes Due*: Thirty days after the presentation to Owner of the final Application for Payment and accompanying documentation, the amount recommended by Engineer (less any further sum Owner is entitled to set off against Engineer's recommendation, including but not limited to set-offs for liquidated damages and set-offs allowed under the provisions above with respect to progress payments) will become due and shall be paid by Owner to Contractor.

15.7 *Waiver of Claims*

A. The making of final payment will not constitute a waiver by Owner of claims or rights against Contractor. Owner expressly reserves claims and rights arising from unsettled Liens, from defective Work appearing after final inspection pursuant to Paragraph 15.05, from Contractor's failure to comply with the Contract Documents or the terms of any special guarantees specified therein, from outstanding Claims by Owner, or from Contractor's continuing obligations under the Contract Documents.

B. The acceptance of final payment by Contractor will constitute a waiver by Contractor of all claims and rights against Owner other than those pending matters that have been duly submitted or appealed under the provisions of Article 17.

15.8 *Correction Period*

EJCDC® C-700, Standard General Conditions of the Construction Contract.
Copyright © 2013 National Society of Professional Engineers, American Council of Engineering Companies and American Society of Civil Engineers. All rights reserved.

A. If within one year after the date of Substantial Completion (or such longer period of time as may be prescribed by the terms of any applicable special guarantee required by the Contract Documents, or by any specific provision of the Contract Documents), any Work is found to be defective, or if the repair of any damages to the Site, adjacent areas that Contractor has arranged to use through construction easements or otherwise, and other adjacent areas used by Contractor as permitted by Laws and Regulations, is found to be defective, then Contractor shall promptly, without cost to Owner and in accordance with Owner's written instructions:

1. correct the defective repairs to the Site or such other adjacent areas;
2. correct such defective Work;
3. if the defective Work has been rejected by Owner, remove it from the Project and replace it with Work that is not defective, and
4. satisfactorily correct or repair or remove and replace any damage to other Work, to the work of others, or to other land or areas resulting therefrom.

B. If Contractor does not promptly comply with the terms of Owner's written instructions, or in an emergency where delay would cause serious risk of loss or damage, Owner may have the defective Work corrected or repaired or may have the rejected Work removed and replaced. Contractor shall pay all claims, costs, losses, and damages (including but not limited to all fees and charges of engineers, architects, attorneys, and other professionals and all court or arbitration or other dispute resolution costs) arising out of or relating to such correction or repair or such removal and replacement (including but not limited to all costs of repair or replacement of work of others).

C. In special circumstances where a particular item of equipment is placed in continuous service before Substantial Completion of all the Work, the correction period for that item may start to run from an earlier date if so provided in the Specifications.

D. Where defective Work (and damage to other Work resulting therefrom) has been corrected or removed and replaced under this paragraph, the correction period hereunder with respect to such Work will be extended for an additional period of one year after such correction or removal and replacement has been satisfactorily completed.

E. Contractor's obligations under this paragraph are in addition to all other obligations and warranties. The provisions of this paragraph shall not be construed as a substitute for, or a waiver of, the provisions of any applicable statute of limitation or repose.

ARTICLE 16 – SUSPENSION OF WORK AND TERMINATION

16.1 *Owner May Suspend Work*

A. At any time and without cause, Owner may suspend the Work or any portion thereof for a period of not more than 90 consecutive days by written notice to Contractor and Engineer. Such notice will fix the date on which Work will be resumed. Contractor shall resume the Work on the date so fixed. Contractor shall be entitled to an

EJCDC® C-700, Standard General Conditions of the Construction Contract.
Copyright © 2013 National Society of Professional Engineers, American Council of Engineering Companies and American Society of Civil Engineers. All rights reserved.

adjustment in the Contract Price or an extension of the Contract Times, or both, directly attributable to any such suspension. Any Change Proposal seeking such adjustments shall be submitted no later than 30 days after the date fixed for resumption of Work.

16.2 *Owner May Terminate for Cause*

A. The occurrence of any one or more of the following events will constitute a default by Contractor and justify termination for cause:

1. Contractor's persistent failure to perform the Work in accordance with the Contract Documents (including, but not limited to, failure to supply sufficient skilled workers or suitable materials or equipment or failure to adhere to the Progress Schedule);

2. Failure of Contractor to perform or otherwise to comply with a material term of the Contract Documents;

3. Contractor's disregard of Laws or Regulations of any public body having jurisdiction; or

4. Contractor's repeated disregard of the authority of Owner or Engineer.

B. If one or more of the events identified in Paragraph 16.02.A occurs, then after giving Contractor (and any surety) ten days written notice that Owner is considering a declaration that Contractor is in default and termination of the contract, Owner may proceed to:

1. declare Contractor to be in default, and give Contractor (and any surety) notice that the Contract is terminated; and

2. enforce the rights available to Owner under any applicable performance bond.

C. Subject to the terms and operation of any applicable performance bond, if Owner has terminated the Contract for cause, Owner may exclude Contractor from the Site, take possession of the Work, incorporate in the Work all materials and equipment stored at the Site or for which Owner has paid Contractor but which are stored elsewhere, and complete the Work as Owner may deem expedient.

D. Owner may not proceed with termination of the Contract under Paragraph 16.02.B if Contractor within seven days of receipt of notice of intent to terminate begins to correct its failure to perform and proceeds diligently to cure such failure.

E. If Owner proceeds as provided in Paragraph 16.02.B, Contractor shall not be entitled to receive any further payment until the Work is completed. If the unpaid balance of the Contract Price exceeds the cost to complete the Work, including all related claims, costs, losses, and damages (including but not limited to all fees and charges of engineers, architects, attorneys, and other professionals) sustained by Owner, such excess will be paid to Contractor. If the cost to complete the Work including such related claims, costs, losses, and damages exceeds such unpaid balance, Contractor shall pay the difference to Owner. Such claims, costs, losses, and damages incurred by Owner will be reviewed by Engineer as to their reasonableness and, when so approved by Engineer, incorporated in a Change Order. When exercising any rights or remedies under this paragraph, Owner shall not be required to obtain the

EJCDC® C-700, Standard General Conditions of the Construction Contract.
Copyright © 2013 National Society of Professional Engineers, American Council of Engineering Companies and American Society of Civil Engineers. All rights reserved.

lowest price for the Work performed.

F. Where Contractor's services have been so terminated by Owner, the termination will not affect any rights or remedies of Owner against Contractor then existing or which may thereafter accrue, or any rights or remedies of Owner against Contractor or any surety under any payment bond or performance bond. Any retention or payment of money due Contractor by Owner will not release Contractor from liability.

G. If and to the extent that Contractor has provided a performance bond under the provisions of Paragraph 6.01.A, the provisions of that bond shall govern over any inconsistent provisions of Paragraphs 16.02.B and 16.02.D.

16.3 *Owner May Terminate For Convenience*

A. Upon seven days written notice to Contractor and Engineer, Owner may, without cause and without prejudice to any other right or remedy of Owner, terminate the Contract. In such case, Contractor shall be paid for (without duplication of any items):

1. completed and acceptable Work executed in accordance with the Contract Documents prior to the effective date of termination, including fair and reasonable sums for overhead and profit on such Work;

2. expenses sustained prior to the effective date of termination in performing services and furnishing labor, materials, or equipment as required by the Contract Documents in connection with uncompleted Work, plus fair and reasonable sums for overhead and profit on such expenses; and

3. other reasonable expenses directly attributable to termination, including costs incurred to prepare a termination for convenience cost proposal.

B. Contractor shall not be paid on account of loss of anticipated overhead, profits, or revenue, or other economic loss arising out of or resulting from such termination.

16.4 *Contractor May Stop Work or Terminate*

A. If, through no act or fault of Contractor, (1) the Work is suspended for more than 90 consecutive days by Owner or under an order of court or other public authority, or (2) Engineer fails to act on any Application for Payment within 30 days after it is submitted, or
(2) Owner fails for 30 days to pay Contractor any sum finally determined to be due, then Contractor may, upon seven days written notice to Owner and Engineer, and provided Owner or Engineer do not remedy such suspension or failure within that time, terminate the contract and recover from Owner payment on the same terms as provided in Paragraph 16.03.

B. In lieu of terminating the Contract and without prejudice to any other right or remedy, if Engineer has failed to act on an Application for Payment within 30 days after it is submitted, or Owner has failed for 30 days to pay Contractor any sum finally determined to be due, Contractor may, seven days after written notice to Owner and Engineer, stop the Work until payment is made of all such amounts due Contractor, including interest thereon. The provisions of this paragraph are not intended to preclude Contractor from submitting a Change Proposal for an

EJCDC® C-700, Standard General Conditions of the Construction Contract.
Copyright © 2013 National Society of Professional Engineers, American Council of Engineering Companies and American Society of Civil Engineers. All rights reserved.

adjustment in Contract Price or Contract Times or otherwise for expenses or damage directly attributable to Contractor's stopping the Work as permitted by this paragraph.

17 ARTICLE 17 – FINAL RESOLUTION OF DISPUTES

17.1 *Methods and Procedures*

A. *Disputes Subject to Final Resolution*: The following disputed matters are subject to final resolution under the provisions of this Article:

1. A timely appeal of an approval in part and denial in part of a Claim, or of a denial in full; and
2. Disputes between Owner and Contractor concerning the Work or obligations under the Contract Documents, and arising after final payment has been made.

B. *Final Resolution of Disputes*: For any dispute subject to resolution under this Article, Owner or Contractor may:

1. elect in writing to invoke the dispute resolution process provided for in the Supplementary Conditions; or
2. agree with the other party to submit the dispute to another dispute resolution process; or
3. if no dispute resolution process is provided for in the Supplementary Conditions or mutually agreed to, give written notice to the other party of the intent to submit the dispute to a court of competent jurisdiction.

ARTICLE 18 – MISCELLANEOUS

18.1 *Giving Notice*

A. Whenever any provision of the Contract Documents requires the giving of written notice, it will be deemed to have been validly given if:

1. delivered in person, by a commercial courier service or otherwise, to the individual or to a member of the firm or to an officer of the corporation for which it is intended; or
2. delivered at or sent by registered or certified mail, postage prepaid, to the last business address known to the sender of the notice.

18.2 *Computation of Times*

A. When any period of time is referred to in the Contract by days, it will be computed to exclude the first and include the last day of such period. If the last day of any such period falls on a Saturday or Sunday or on a day made a legal holiday by the law of the applicable jurisdiction, such day will be omitted from the computation.

18.3 *Cumulative Remedies*

A. The duties and obligations imposed by these General Conditions and the rights and remedies available hereunder to the parties hereto are in addition to, and are not to

EJCDC® C-700, Standard General Conditions of the Construction Contract.
Copyright © 2013 National Society of Professional Engineers, American Council of Engineering Companies and American Society of Civil Engineers. All rights reserved.

be construed in any way as a limitation of, any rights and remedies available to any or all of them which are otherwise imposed or available by Laws or Regulations, by special warranty or guarantee, or by other provisions of the Contract. The provisions of this paragraph will be as effective as if repeated specifically in the Contract Documents in connection with each particular duty, obligation, right, and remedy to which they apply.

18.4 *Limitation of Damages*

A. With respect to any and all Change Proposals, Claims, disputes subject to final resolution, and other matters at issue, neither Owner nor Engineer, nor any of their officers, directors, members, partners, employees, agents, consultants, or subcontractors, shall be liable to Contractor for any claims, costs, losses, or damages sustained by Contractor on or in connection with any other project or anticipated project.

18.5 *No Waiver*

A. A party's non-enforcement of any provision shall not constitute a waiver of that provision, nor shall it affect the enforceability of that provision or of the remainder of this Contract.

18.6 *Survival of Obligations*

A. All representations, indemnifications, warranties, and guarantees made in, required by, or given in accordance with the Contract, as well as all continuing obligations indicated in the Contract, will survive final payment, completion, and acceptance of the Work or termination or completion of the Contract or termination of the services of Contractor.

18.7 *Controlling Law*

A. This Contract is to be governed by the law of the state in which the Project is located.

18.8 *Headings*

A. Article and paragraph headings are inserted for convenience only and do not constitute parts of these General Conditions.

EJCDC® C-700, Standard General Conditions of the Construction Contract.
Copyright © 2013 National Society of Professional Engineers, American Council of Engineering Companies and American Society of Civil Engineers. All rights reserved.

SECTION 00 73 00
SUPPLEMENTARY CONDITIONS

These Supplementary Conditions amend or supplement the Standard General Conditions of the Construction Contract, EJCDC® C-700 (2013 Edition). All provisions that are not so amended or supplemented remain in full force and effect.

The terms used in these Supplementary Conditions have the meanings stated in the General Conditions. Additional terms used in these Supplementary Conditions have the meanings stated below, which are applicable to both the singular and plural thereof.

The address system used in these Supplementary Conditions is the same as the address system used in the General Conditions, with the prefix "SC" added thereto.

SC-6.2 – Insurance—General Provisions

SC-6.2 Add the following paragraph immediately after Paragraph 6.2.B:

1. With limiting any of the other obligations or liabilities of the Contractor, Contractor shall secure and maintain such insurance from an insurance company (or companies) authorized to write insurance in the State of Montana, with a minimum "A.M. Best Rating" of A-, VI, as will protect the Contractor, the vicarious acts of subcontractors, the Owner and the Engineer and their agents and employees from claims for bodily injury, or property damage which may arise from operations and completed operations under this Agreement. Contractor shall commence work under this Agreement until such insurance has been obtained and certificates of insurance, with binders, or certified copies of the insurance policy shall have been filed with the Owner and the Engineer. All insurance coverage shall remain in effect throughout the life of the Agreement, except that the Contractor shall maintain the Commercial General Liability Policy including project and completed operations coverage for a period of at least one year following the substantial completion date for property damage resulting from occurrences during the Agreement period.

SC-6.3 – Contractor's Liability Insurance

SC-6.3 Add the following new paragraph immediately after Paragraph 6.3.J:

K. The limits of liability for the insurance required by Paragraph 6.3 of the General Conditions shall provide coverage for not less than the following amounts or greater where required by Laws and Regulations:

1. Workers' Compensation, and related coverages under Paragraphs 6.3.A.1 and A.2 of the General Conditions:

State:	**Statutory**
Federal, if applicable (e.g., Longshoreman's):	**Statutory**
Employer's Liability:	**$500,000.00**

6.3.C Contractor's Commercial General Liability under Paragraphs 6.03.B and of the General Conditions:

General Aggregate	**$**	**3,000,000.00**
Products - Completed Operations Aggregate	**$**	**3,000,000.00**
Personal and Advertising Injury	**$**	**1,000,000.00**
Each Occurrence (Bodily Injury and Property Damage)	**$**	**1,000,000.00**

Coverage to include:

1) Premises – Operations
2) Operations of Independent Contractor.
3) Contractual Liability.
4) Personal Injury
5) Products and Completed Operations
6) Broad Form Property Damage will include explosion, collapse, blasting, and underground where applicable.
7) Per Project Aggregate Endorsement.

2. Automobile Liability under Paragraph 6.03.D. of the General Conditions:

Bodily Injury:

Each person	**$**	**500,000.00**
Each accident	**$**	**1,000,000.00**
Property Damage: Each	**$**	**1,000,000.00**
[or] Combined Single Limit of	$	1,000,000.00

Coverage to include:

1) All Owned.
2) Hired
3) Non-Owned

3. Excess or Umbrella Liability:

Contractor's Liability Insurance under 6.3.B1 through 6.3.B.4 may be satisfied by primary insurance or a combination of primary and excess or umbrella insurance. Primary occurrence limit cannot be less than $1,000,000.00. Deductible not to exceed $5,000.00 per occurrence on property damage.

4. **Contractor's Pollution Liability:**

Each Occurrence	**$**	**N.A.**
General Aggregate	**$**	**N.A.**

☒ **If box is checked, Contractor is not required to provide Contractor's Pollution Liability insurance under this Contract**

5. **Additional Insureds: In addition to Owner and Engineer, include as additional insureds all Engineering Subconsultants.**

6. **Contractor's Professional Liability:**

Each Claim	**$1,000,000.00**
Annual Aggregate	**$ 3,000,000.00**

7. The Contractual Liability coverage required by paragraph 6.03.B.1 through 6.03.B.4 of the General Conditions shall provide coverage for not less than the following amounts:

Each Occurrence:	**$ 1,000,000.00**
Aggregate	**$ 3,000,000.00**

SC-6.3.I.3 Replace paragraph 6.3.I.3 with the following:

6.3.I.3. Contain a provision or endorsement that the coverage afforded will not be canceled, materially changed, or renewal refused until at least 45 days prior written notice has been given to Owner and Contractor and to each other additional insured identified in the Supplementary Conditions to whom a certificate of insurance has been issued (and the certificates of insurance furnished by the Contractor pursuant to Paragraph 6.2.C will so provide).

SC-6.5 – Property Insurance

SC-6.5. Delete Paragraph 6.5.A in its entirety and insert the following in its place:

CONTRACTOR shall purchase and maintain property insurance, completed value form, upon the Work at the Site in the amount of the full replacement cost thereof (subject to such deductible amounts as may be provided in these Supplementary Conditions or required by Laws and Regulations). This insurance shall:

1. Include the interests of Owner, Contractor, Subcontractors, Engineer, Engineer's Consultants, and any other individuals or entities identified in the Supplementary Conditions, and the officers, directors, partners, employees, agents, and other consultants and subcontractors of any of them each of whom is deemed to have an insurable interest and shall be listed as an insured or additional insured;
2. Be written on a Builder's Risk, "all-risk", or open peril or special causes of loss policy form that shall at least include insurance for physical loss and damage to the Work, temporary buildings, falsework, and materials and equipment in transit and shall insure against at least the following perils or causes of loss: fire, lightning, extended coverage, theft, vandalism and malicious mischief, earthquake, earth movement, collapse, debris removal, demolition occasioned by enforcement of Laws and Regulations, water damage, flood damage, and such other perils as may be specifically required by the Supplementary Conditions;
3. Include expenses incurred in the repair or replacement of any insured property (including but not limited to fees and charges of engineers and architects);
4. Cover materials and equipment in transit for incorporation in the Work or stored at the Site or at another location that was agreed to in writing by Owner prior to being incorporated in the Work, provided that such materials and equipment have been included in an Application for Payment recommended by ENGINEER;
5. Be endorsed to allow occupancy and partial utilization of the Work by OWNER, such that those portions of the Work that are not yet occupied or used by Owner shall remain covered by the builder's risk insurance.
6. Include performance/hot testing and startup;
7. Be maintained in effect until final payment is made unless otherwise agreed to in writing by Owner, Contractor, and Engineer with 30 days written notice to each other additional insured to whom a certificate of insurance has been issued.

8. Hold CONTRACTOR responsible for any deductible or self-insured retention;

9. Be purchased and maintained by CONTRACTOR in accordance with this Paragraph SC-6.5 and shall comply with the requirements of Paragraph 6.5.B of the General Conditions. The qualifications of the insurance company shall comply with the requirements of paragraph 6.2.B.

10. Extend to cover damage or loss to insured property while in temporary storage at the Site or in a storage location outside the Site (but not including property stored at the premises of a manufacturer or Supplier).

11. Allow for the waiver of the insurer's subrogation rights, as set forth below.

12. Provide primary coverage for all losses and damages caused by the perils or causes of loss covered.

13. Not include a co-insurance clause

14. Include an exception for ensuing losses from physical damage or loss with respect to any defective workmanship, design, or materials exclusions.

15. Cover, as insured property, at least the following: (a) the Work and all materials, supplies, machinery, apparatus, equipment, fixtures, and other property of a similar nature that are to be incorporated into or used in the preparation, fabrication, construction, erection, or completion of the Work, including Owner-furnished or assigned property; (b) spare parts inventory required within the scope of the Contract; and (c) temporary works which are not intended to form part of the permanent constructed Work but which are intended to provide working access to the Site, or to the Work under construction, or which are intended to provide temporary support for the Work under construction, including scaffolding, form work, fences, shoring, falsework, and temporary structures.

16. Include by express endorsement coverage of damage to Contractor's equipment.

SC-6.5.A.1 Add the following new subparagraph after subparagraph 6.5.A.1:

a. In addition to Owner, Contractor, and all Subcontractors, include the Engineer and Engineering Subconsultants as insureds.

SC-6.5.B. Replace Paragraph 6.5.B. with the following language:

All of the policies of insurance (and the certificates or other evidence thereof) required to be purchased and maintained in accordance with Paragraph 6.5 will contain a

provision or endorsement that the coverage afforded will not be canceled or materially changed or renewal refused until at least 45 days prior written notice has been given to Owner and Contractor and to each other additional insured to whom a certificate of insurance has been issued and will contain waiver provisions in accordance with Paragraph 6.6.

SC-7.6.A Amend Paragraph 7.6.A by adding the following text to the end of the Paragraph:

The Contractor shall not award work valued at more than fifty percent of the Contract Price to Subcontractor(s), without prior written approval of the Owner.

SC7.7 B Patent Fees and Royalties Modify Paragraph 7.7 B by replacing the text with the following:

7.7 B Exclusive of those conditions set forth in any Non-Disclosure Agreements between Aqua Aerobics Systems, Inc. and the Contractor, and to the fullest extent permitted by Laws and Regulations, Owner shall indemnify and hold harmless Contractor, and its officers, directors, members, partners, employees, agents, consultants, and subcontractors from and against all claims, costs, losses, and damages (including but not limited to all fees and charges of engineers, architects, attorneys, and other professionals, and all court or arbitration or other dispute resolution costs) arising out of or relating to any infringement of patent rights or copyrights incident to the use in the performance of the Work or resulting from the incorporation in the Work of any invention, design, process, product, or device specified in the Contract Documents, but not identified as being subject to payment of any license fee or royalty to others required by patent rights or copyrights.

SC-10.3 – Project Representative

SC-10.3 Add the following new paragraphs immediately after Paragraph 10.03.A:

A. The Resident Project Representative (RPR) will be Engineer's representative at the Site, will act as directed by and under the supervision of Engineer, and will confer with Engineer regarding RPR's actions.

1. General: RPR's dealings in matters pertaining to the Work in general shall be with Engineer and Contractor. RPR's dealings with Subcontractors shall only be through or with the full knowledge and approval of Contractor. RPR shall generally communicate with Owner only with the knowledge of and under the direction of Engineer.

2. Schedules: Review the progress schedule, schedule of Shop Drawing and Sample submittals, and Schedule of Values prepared by Contractor and consult with Engineer concerning acceptability.

3. Conferences and Meetings: Attend meetings with Contractor, such as preconstruction conferences, progress meetings, job conferences, and

other Project-related meetings, and prepare and circulate copies of minutes thereof.

4. Liaison:

   a. Serve as Engineer's liaison with Contractor. Working principally through Contractor's authorized representative or designee, assist in providing information regarding the provisions and intent of the Contract Documents.

   b. Assist Engineer in serving as Owner's liaison with Contractor when Contractor's operations affect Owner's on-Site operations.

   c. Assist in obtaining from Owner additional details or information, when required for proper execution of the Work.

5. Interpretation of Contract Documents: Report to Engineer when clarifications and interpretations of the Contract Documents are needed and transmit to Contractor clarifications and interpretations as issued by Engineer.

6. Shop Drawings and Samples:

   a. Record date of receipt of Samples and Contractor-approved Shop Drawings.

   b. Receive Samples which are furnished at the Site by Contractor, and notify Engineer of availability of Samples for examination.

   c. Advise Engineer and Contractor of the commencement of any portion of the Work requiring a Shop Drawing or Sample submittal for which RPR believes that the submittal has not been approved by Engineer.

7. Modifications: Consider and evaluate Contractor's suggestions for modifications in Drawings or Specifications and report such suggestions, together with RPR's recommendations, if any, to Engineer. Transmit to Contractor in writing decisions as issued by Engineer.

8. Review of Work and Rejection of Defective Work:

   a. Conduct on-Site observations of Contractor's work in progress to assist Engineer in determining if the Work is in general proceeding in accordance with the Contract Documents.

   b. Report to Engineer whenever RPR believes that any part of Contractor's work in progress is defective, will not produce a completed Project that conforms generally to the Contract Documents, or will imperil the integrity of the design concept of the completed Project as a functioning whole as indicated in the Contract Documents, or has been damaged, or does not meet the requirements of any inspection, test or approval required to be made; and advise Engineer of that part of work in progress that

RPR believes should be corrected or rejected or should be uncovered for observation, or requires special testing, inspection or approval.

9. Inspections, Tests, and System Start-ups:

   a. Verify that tests, equipment, and systems start-ups and operating and maintenance training are conducted in the presence of appropriate Owner's personnel, and that Contractor maintains adequate records thereof.

   b. Observe, record, and report to Engineer appropriate details relative to the test procedures and systems start-ups.

10. Records:

   a. Prepare a daily report or keep a diary or log book, recording Contractor's hours on the Site, Subcontractors present at the Site, weather conditions, data relative to questions of Change Orders, Field Orders, Work Change Directives, or changed conditions, Site visitors, deliveries of equipment or materials, daily activities, decisions, observations in general, and specific observations in more detail as in the case of observing test procedures; and send copies to Engineer.

   b. Record names, addresses, fax numbers, e-mail addresses, web site locations, and telephone numbers of all Contractors, Subcontractors, and major Suppliers of materials and equipment.

   c. Maintain records for use in preparing Project documentation.

11. Reports:

   a. Furnish to Engineer periodic reports as required of progress of the Work and of Contractor's compliance with the Progress Schedule and schedule of Shop Drawing and Sample submittals.

   b. Draft and recommend to Engineer proposed Change Orders, Work Change Directives, and Field Orders. Obtain backup material from Contractor.

   c. Immediately notify Engineer of the occurrence of any Site accidents, emergencies, acts of God endangering the Work, force majeure or delay events, damage to property by fire or other causes, or the discovery of any Constituent of Concern or Hazardous Environmental Condition.

12. Payment Requests: Review applications for payment with Contractor for compliance with the established procedure for their submission and forward with recommendations to Engineer, noting particularly the relationship of the payment requested to the Schedule of Values, Work completed, and materials and equipment delivered at the Site but not incorporated in the Work.

13. Certificates, Operation and Maintenance Manuals: During the course of the Work, verify that materials and equipment certificates, operation and maintenance manuals and other data required by the Contract Documents to be assembled and furnished by Contractor are applicable to the items actually installed and in accordance with the Contract Documents, and have these documents delivered to Engineer for review and forwarding to Owner prior to payment for that part of the Work.

14. Completion:

    a. Participate in Engineer's visits to the Site to determine Substantial Completion, assist in the determination of Substantial Completion and the preparation of a punch list of items to be completed or corrected.

    b. Participate in Engineer's final visit to the Site to determine completion of the Work, in the company of Owner and Contractor, and prepare a final punch list of items to be completed and deficiencies to be remedied.

    c. Observe whether all items on the final list have been completed or corrected and make recommendations to Engineer concerning acceptance and issuance of the notice of acceptability of the work.

B. The RPR shall not:

1. Authorize any deviation from the Contract Documents or substitution of materials or equipment (including "or-equal" items).

2. Exceed limitations of Engineer's authority as set forth in the Contract Documents.

3. Undertake any of the responsibilities of Contractor, Subcontractors, or Suppliers.

4. Advise on, issue directions relative to, or assume control over any aspect of the means, methods, techniques, sequences or procedures of Contractor's work.

5. Advise on, issue directions regarding, or assume control over security or safety practices, precautions, and programs in connection with the activities or operations of Owner or Contractor.

6. Participate in specialized field or laboratory tests or inspections conducted off- site by others except as specifically authorized by Engineer.

7. Accept Shop Drawing or Sample submittals from anyone other than Contractor.

8. Authorize Owner to occupy the Project in whole or in part.

SC-15.4 Add the following to the end of Paragraph 15.4.A:

Owner has the right to take possession of or use any completed or substantially completed portions of the Work at any time, but such taking possession or use will not be deemed an acceptance of any Work not completed in accordance with the Contract Documents. Owner's use of any facilities so identified in the Contract Documents will not be grounds for extension of the contract times or change in the contract price. Owner's use of any facilities not specifically identified in the Contract Documents will be in accordance with conditions agreed to prior to such use, and any extra costs or delays in completion incurred and properly claimed by Contractor will be equitably adjusted with a Change Order. Facilities substantially completed in accordance with the Contract Documents which are occupied or used by Owner prior to substantial completion of the entire work will be done in accordance with General Conditions 15.3. Guarantee periods for accepted or substantially completed work including mechanical and electrical equipment will commence upon the start of continuous use by Owner. All tests and instruction of Owner's personnel must be satisfactorily completed, and Owner shall assume responsibility for and operation of all facilities occupied or used except as may arise through portions of Work not yet completed by Contractor. If the Work has been substantially completed and the Engineer certifies that full completion thereof is materially delayed through no fault of the Contractor, the Owner shall, without terminating the Agreement, make payment of the balance due for the portion of the Work fully completed and accepted.

SC-15.6 Final Payment

SC-15.6.A Add the following Paragraph Immediately after Paragraph 15.6.A

Upon correction of deficiencies and completion of the entire Work, Contractor shall notify Engineer in writing requesting a final inspection. If, in the Opinion of the Engineer, the Contractor has satisfactorily completed the Work, Owner, Agency, Engineer, and Contractor shall execute the Final Inspection and Acceptance.

SC-17.1.B Add the following Paragraph Immediately after Paragraph 17.1.B entitled 17.1.C Dispute Resolution Process - Mediation.

C. *Dispute Resolution Process – Mediation:* Owner and Contractor agree that they shall first submit any and all unsettled claims, counterclaims, disputes, and other matters in question between them arising out of or relating to this Agreement or the breach thereof ("Disputes") to mediation by a mediator to be agreed upon by the parties, or each party will choose a mediator and those mediators will together choose a mediator for the mediation. Owner and Contractor agree to participate in the mediation process in good faith. The process shall be conducted on a confidential basis, and shall be completed within 120 days. If such mediation is unsuccessful in resolving a Dispute, then (1) the parties may mutually agree to a dispute resolution of their choice, or (2)

either party may seek to have the Dispute resolved by a court of competent jurisdiction.

"General Decision Number: MT20250067 01/17/2025

Superseded General Decision Number: MT20240067

State: Montana

Construction Type: Heavy

County: Missoula County in Montana.

HEAVY CONSTRUCTION PROJECTS

Note: Contracts subject to the Davis-Bacon Act are generally required to pay at least the applicable minimum wage rate required under Executive Order 14026 or Executive Order 13658. Please note that these Executive Orders apply to covered contracts entered into by the federal government that are subject to the Davis-Bacon Act itself, but do not apply to contracts subject only to the Davis-Bacon Related Acts, including those set forth at 29 CFR 5.1(a)(1).

If the contract is entered into on or after January 30, 2022, or the contract is renewed or extended (e.g., an option is exercised) on or after January 30, 2022:	. Executive Order 14026 generally applies to the contract. . The contractor must pay all covered workers at least $17.75 per hour (or the applicable wage rate listed on this wage determination, if it is higher) for all hours spent performing on the contract in 2025.
If the contract was awarded on or between January 1, 2015 and January 29, 2022, and the contract is not renewed or extended on or after January 30, 2022:	. Executive Order 13658 generally applies to the contract. . The contractor must pay all covered workers at least $13.30 per hour (or the applicable wage rate listed on this wage determination, if it is higher) for all hours spent performing on that contract in 2025.

The applicable Executive Order minimum wage rate will be adjusted annually. If this contract is covered by one of the Executive Orders and a classification considered necessary for performance of work on the contract does not appear on this wage determination, the contractor must still submit a conformance request.

Additional information on contractor requirements and worker protections under the Executive Orders is available at http://www.dol.gov/whd/govcontracts.

Modification Number	Publication Date
0	01/03/2025
1	01/17/2025

BOIL0011-003 01/01/2021

	Rates	Fringes
BOILERMAKER	$ 34.12	30.94

CARP0028-011 06/01/2024

	Rates	Fringes
CARPENTER (Including Formwork)	$ 36.49	14.33

Zone Definition:

The hourly rate applicable to each project is determined by measuring the road miles over the shortest practical route from the County Courthouse of the following towns to the ceter of the job: Billings, Bozeman, Butte, Great Falls, Helena, Kalispell, Lewiston, Miles City, and Missoula

Zone 1: 0 to 30 miles - Base Rate
Zone 2: 31 to 60 miles - $4.00
Zone 3: over 60 miles - $6.00

---

* ELEC0768-009 12/01/2024

	Rates	Fringes
ELECTRICIAN	$ 39.71	16.43

ENGI0400-006 05/01/2024

	Rates	Fringes
POWER EQUIPMENT OPERATOR:		
(Zone 1)		
(1) A-frame truck Crane, Forklift, oiler (except crane)	$ 23.47	10.40
(2) Excavator, Crane Oiler	$ 23.94	10.40
(3) Mechanic, Scraper	$ 24.34	10.40
(4) Cranes 25-44 tons	$ 37.00	15.93
(5) Cranes 45-74 tons	$ 37.00	15.93
(6) Cranes 75 to 144 tons, whirley cranes	$ 38.00	15.93
(7) Cranes, 150 tons to including 250 tons (add $1.00 for every 100 tons over 250 tons); Crane, Stiff-Leg or Derrick; Helicopter Hoist; Crane, Tower (all)	$ 39.00	15.93

ZONE DEFINITIONS FOR POWER EQUPMENT OPERATORS:
The zone hourly rates applicable to each project shall be determined by measuring the road miles over the shortest practical maintained route from the nearest County Court House of the following listed towns to the center of the job:

BILLINGS, BOZEMAN, BUTTE, GREAT FALLS, HELENA, KALISPELL,

MISSOULA

Zone 1: 0 to 30 miles - Base Pay
Zone 2: 30 to 60 miles - Base Pay + $3.50
Zone 3: Over 60 miles - Base Pay + $5.50

IRON0014-015 01/01/2024

	Rates	Fringes
IRONWORKER: Reinforcing and Structural	$ 32.08	29.06

PLUM0459-010 05/01/2024

	Rates	Fringes
PLUMBER	$ 39.38	16.23

---

* TEAM0190-001 05/01/2024

	Rates	Fringes
TRUCK DRIVER		
(2) Water Truck		
ZONE A	$ 31.88	13.40
(3) Water Truck		
ZONE A	$ 31.88	13.40

ZONE B (30-60 miles from County Courthouse of listed cities*): Add $3.05 per hour to ZONE A rates
ZONE C (over 60 miles from County COurthouse of listed cities*): Add $4.85 per hour to ZONE A rates.

*Zone pay will be calculated from the city center of the following listed cities:

BILLINGS
BOZEMAN
BUTTE
GREAT FALLS
HELENA
KALISPELL
MISSOULA

---

* SUMT2011-043 02/07/2011

	Rates	Fringes
LABORER: Common or General	$ 16.91 **	9.08
OPERATOR: Asphalt Roller	$ 22.39	3.96
OPERATOR: Backhoe	$ 22.12	8.37
OPERATOR: Bobcat/Skid Steer/Skid Loader	$ 25.67	8.05
OPERATOR: Loader (Front End)	$ 22.67	6.54
PAINTER: Brush and Spray	$ 25.00	0.00
TRUCK DRIVER: Dump Truck	$ 19.38	4.74

WELDERS - Receive rate prescribed for craft performing operation to which welding is incidental.

==========

** Workers in this classification may be entitled to a higher minimum wage under Executive Order 14026 ($17.75) or 13658 ($13.30). Please see the Note at the top of the wage determination for more information. Please also note that the minimum wage requirements of Executive Order 14026 are not currently being enforced as to any contract or subcontract to which the states of Texas, Louisiana, or Mississippi, including their agencies, are a party.

Note: Executive Order (EO) 13706, Establishing Paid Sick Leave for Federal Contractors applies to all contracts subject to the Davis-Bacon Act for which the contract is awarded (and any solicitation was issued) on or after January 1, 2017. If this contract is covered by the EO, the contractor must provide employees with 1 hour of paid sick leave for every 30 hours they work, up to 56 hours of paid sick leave each year. Employees must be permitted to use paid sick leave for their own illness, injury or other health-related needs, including preventive care; to assist a family member (or person who is like family to the employee) who is ill, injured, or has other health-related needs, including preventive care; or for reasons resulting from, or to assist a family member (or person who is like family to the employee) who is a victim of, domestic violence, sexual assault, or stalking. Additional information on contractor requirements and worker protections under the EO is available at https://www.dol.gov/agencies/whd/government-contracts.

Unlisted classifications needed for work not included within the scope of the classifications listed may be added after award only as provided in the labor standards contract clauses (29CFR 5.5 (a) (1) (iii)).

The body of each wage determination lists the classifications and wage rates that have been found to be prevailing for the type(s) of construction and geographic area covered by the wage determination. The classifications are listed in alphabetical order under rate identifiers indicating whether the particular rate is a union rate (current union negotiated rate), a survey rate, a weighted union average rate, a state adopted rate, or a supplemental classification rate.

Union Rate Identifiers

A four-letter identifier beginning with characters other than ""SU"", ""UAVG"", ?SA?, or ?SC? denotes that a union rate was prevailing for that classification in the survey. Example: PLUM0198-005 07/01/2024. PLUM is an identifier of the union whose collectively bargained rate prevailed in the survey for this classification, which in this example would be Plumbers. 0198 indicates the local union number or district council number where applicable, i.e., Plumbers Local 0198. The next number, 005 in the example, is an internal number used in processing the wage determination. The date, 07/01/2024 in the example, is the effective date of the most current negotiated

rate.

Union prevailing wage rates are updated to reflect all changes over time that are reported to WHD in the rates in the collective bargaining agreement (CBA) governing the classification.

Union Average Rate Identifiers

The UAVG identifier indicates that no single rate prevailed for those classifications, but that 100% of the data reported for the classifications reflected union rates. EXAMPLE: UAVG-OH-0010 01/01/2024. UAVG indicates that the rate is a weighted union average rate. OH indicates the State of Ohio. The next number, 0010 in the example, is an internal number used in producing the wage determination. The date, 01/01/2024 in the example, indicates the date the wage determination was updated to reflect the most current union average rate.

A UAVG rate will be updated once a year, usually in January, to reflect a weighted average of the current rates in the collective bargaining agreements on which the rate is based.

Survey Rate Identifiers

The ""SU"" identifier indicates that either a single non-union rate prevailed (as defined in 29 CFR 1.2) for this classification in the survey or that the rate was derived by computing a weighted average rate based on all the rates reported in the survey for that classification. As a weighted average rate includes all rates reported in the survey, it may include both union and non-union rates. Example: SUFL2022-007 6/27/2024. SU indicates the rate is a single non-union prevailing rate or a weighted average of survey data for that classification. FL indicates the State of Florida. 2022 is the year of the survey on which these classifications and rates are based. The next number, 007 in the example, is an internal number used in producing the wage determination. The date, 6/27/2024 in the example, indicates the survey completion date for the classifications and rates under that identifier.

?SU? wage rates typically remain in effect until a new survey is conducted. However, the Wage and Hour Division (WHD) has the discretion to update such rates under 29 CFR 1.6(c)(1).

State Adopted Rate Identifiers

The ""SA"" identifier indicates that the classifications and prevailing wage rates set by a state (or local) government were adopted under 29 C.F.R 1.3(g)-(h). Example: SAME2023-007 01/03/2024. SA reflects that the rates are state adopted. ME refers to the State of Maine. 2023 is the year during which the state completed the survey on which the listed classifications and rates are based. The next number, 007 in the example, is an internal number used in producing the wage determination. The date, 01/03/2024 in the example, reflects the date on which the classifications and rates under the ?SA? identifier took effect under state law in the state from which the rates were adopted.

WAGE DETERMINATION APPEALS PROCESS

1) Has there been an initial decision in the matter? This can

be:

a) a survey underlying a wage determination
b) an existing published wage determination
c) an initial WHD letter setting forth a position on
a wage determination matter
d) an initial conformance (additional classification
and rate) determination

On survey related matters, initial contact, including requests for summaries of surveys, should be directed to the WHD Branch of Wage Surveys. Requests can be submitted via email to davisbaconinfo@dol.gov or by mail to:

Branch of Wage Surveys
Wage and Hour Division
U.S. Department of Labor
200 Constitution Avenue, N.W.
Washington, DC 20210

Regarding any other wage determination matter such as conformance decisions, requests for initial decisions should be directed to the WHD Branch of Construction Wage Determinations. Requests can be submitted via email to BCWD-Office@dol.gov or by mail to:

Branch of Construction Wage Determinations
Wage and Hour Division
U.S. Department of Labor
200 Constitution Avenue, N.W.
Washington, DC 20210

2) If an initial decision has been issued, then any interested party (those affected by the action) that disagrees with the decision can request review and reconsideration from the Wage and Hour Administrator (See 29 CFR Part 1.8 and 29 CFR Part 7). Requests for review and reconsideration can be submitted via email to dba.reconsideration@dol.gov or by mail to:

Wage and Hour Administrator
U.S. Department of Labor
200 Constitution Avenue, N.W.
Washington, DC 20210

The request should be accompanied by a full statement of the interested party's position and any information (wage payment data, project description, area practice material, etc.) that the requestor considers relevant to the issue.

3) If the decision of the Administrator is not favorable, an interested party may appeal directly to the Administrative Review Board (formerly the Wage Appeals Board). Write to:

Administrative Review Board
U.S. Department of Labor
200 Constitution Avenue, N.W.
Washington, DC 20210.

==========

END OF GENERAL DECISION"

MONTANA
PREVAILING WAGE RATES FOR HEAVY CONSTRUCTION SERVICES 2025

Effective: January 11, 2025

Greg Gianforte, Governor
State of Montana

Sarah Swanson, Commissioner
Department of Labor & Industry

To obtain copies of prevailing wage rate schedules, or for information relating to public works projects and payment of prevailing wage rates, visit ESD at erd.dli.mt.gov/labor-standards or contact:

Employment Standards Division
Montana Department of Labor and Industry
P. O. Box 8011
Helena, MT 59604
Phone 406-444-6543

The department welcomes questions, comments, and suggestions from the public. In addition, we'll do our best to provide information in an accessible format, upon request, in compliance with the Americans with Disabilities Act.

MONTANA PREVAILING WAGE REQUIREMENTS

The Commissioner of the Department of Labor and Industry, in accordance with Sections 18-2-401 and 18-2-402 of the Montana Code Annotated (MCA), has determined the standard prevailing rate of wages for the occupations listed in this publication.

The wages specified herein control the prevailing rate of wages for the purposes of Section 18-2-401, et seq., MCA. It is required each employer pay (as a minimum) the rate of wages, including fringe benefits, travel allowance, zone pay and per diem applicable to the district in which the work is being performed as provided in the attached wage determinations.

All Montana Prevailing Wage Rates are available on the internet at erd.dli.mt.gov/labor-standards or by contacting the department at (406) 444-6543.

In addition, this publication provides general information concerning compliance with Montana's Prevailing Wage Law and the payment of prevailing wages. For detailed compliance information relating to public works contracts and payment of prevailing wage rates, please consult the regulations on the internet at erd.dli.mt.gov/labor-standards or contact the department at (406) 444-6543.

SARAH SWANSON
Commissioner
Department of Labor and Industry
State of Montana

TABLE OF CONTENTS

MONTANA PREVAILING WAGE REQUIREMENTS:

A. Date of Publication 3
B. Definition of Heavy Construction 3
C. Definition of Public Works Contract 3
D. Prevailing Wage Schedule 3
E. Rates to Use for Projects 3
F. Wage Rate Adjustments for Multiyear Contracts 3
G. Fringe Benefits 4
H. Dispatch City 4
I. Zone Pay 4
J. Computing Travel Benefits 4
K. Per Diem 4
L. Apprentices 4
M. Posting Notice of Prevailing Wages 5
N. Employment Preference 5
O. Projects of a Mixed Nature 5
P. Occupations Definitions Website 5
Q. Welder Rates 5
R. Foreman Rates 5
S Proper Classification for Pipefitter and Laborer/Pipelayer Work on Water and Waste Water Treatment Plants 5

WAGE RATES:

BOILERMAKERS 6
BRICK, BLOCK, AND STONE MASONS 6
CARPENTERS 6
CEMENT MASONS AND CONCRETE FINISHERS 6
CONSTRUCTION EQUIPMENT OPERATORS
- OPERATORS GROUP 1 7
- OPERATORS GROUP 2 7
- OPERATORS GROUP 3 8
- OPERATORS GROUP 4 8
- OPERATORS GROUP 5 8
- OPERATORS GROUP 6 8
- OPERATORS GROUP 7 9

CONSTRUCTION LABORERS
- LABORERS GROUP 1 9
- LABORERS GROUP 2 9
- LABORERS GROUP 3 10
- LABORERS GROUP 4 10

DIVERS 10
DIVER TENDERS 11
ELECTRICIANS 11
INSULATION WORKERS - MECHANICAL (HEAT AND FROST) 11
IRONWORKERS - STRUCTURAL STEEL AND REBAR PLACERS 12
LINE CONSTRUCTION
- EQUIPMENT OPERATORS 12
- GROUNDMAN 12
- LINEMAN 12

MILLWRIGHTS 13
PAINTERS 13
PILE BUCKS 13
PLUMBERS, PIPEFITTERS, AND STEAMFITTERS 13
SPRINKLERFITTERS 14
TRUCK DRIVERS 14

A. Date of Publication January 13, 2025

B. Definition of Heavy Construction

The Administrative Rules of Montana (ARM), 24.17.501(4) – (4)(b), states *"Heavy construction projects include, but are not limited to, those projects that are not properly classified as either 'building construction', or 'highway construction.'*

Heavy construction projects include, but are not limited to, antenna towers, bridges (major bridges designed for commercial navigation), breakwaters, caissons (other than building or highway), canals, channels, channel cut-offs, chemical complexes or facilities (other than buildings), cofferdams, coke ovens, dams, demolition (not incidental to construction), dikes, docks, drainage projects, dredging projects, electrification projects (outdoor), fish hatcheries, flood control projects, industrial incinerators (other than building), irrigation projects, jetties, kilns, land drainage (not incidental to other construction), land leveling (not incidental to other construction), land reclamation, levees, locks and waterways, oil refineries (other than buildings), pipe lines, ponds, pumping stations (prefabricated drop-in units – not buildings), railroad construction, reservoirs, revetments, sewage collection and disposal lines, sewers (sanitary, storm, etc.), shoreline maintenance, ski tows, storage tanks, swimming pools (outdoor), subways (other than buildings), tipples, tunnels, unsheltered piers and wharves, viaducts (other than highway), water mains, waterway construction, water supply lines (not incidental to building), water and sewage treatment plants (other than buildings) and wells."

C. Definition of Public Works Contract

Section 18-2-401(11)(a), MCA defines "public works contract" as *"…a contract for construction services let by the state, county, municipality, school district, or political subdivision or for nonconstruction services let by the state, county, municipality, or political subdivision in which the total cost of the contract is in excess of $25,000…"*.

D. Prevailing Wage Schedule

This publication covers only Heavy Construction occupations and rates in the specific localities mentioned herein. These rates will remain in effect until superseded by a more current publication. Current prevailing wage rate schedules for Building Construction, Highway Construction and Nonconstruction Services occupations can be found on the internet at https://erd.dli.mt.gov/labor-standards/state-prevailing-wage-rates/ or by contacting the department at (406) 444-6543.

E. Rates to Use for Projects

ARM, 24.17.127(1)(c), states *"The wage rates applicable to a particular public works project are those in effect at the time the bid specifications are advertised."*

F. Wage Rate Adjustments for Multiyear Contracts

Section 18-2-417, MCA states:
"(1) Any public works contract that by the terms of the original contract calls for more than 30 months to fully perform must include a provision to adjust, as provided in subsection (2), the standard prevailing rate of wages to be paid to the workers performing the contract.

(2) The standard prevailing rate of wages paid to workers under a contract subject to this section must be adjusted 12 months after the date of the award of the public works contract. The amount of the adjustment must be a 3% increase. The adjustment must be made and applied every 12 months for the term of the contract.

(3) Any increase in the standard rate of prevailing wages for workers under this section is the sole responsibility of the contractor and any subcontractors and not the contracting agency."

G. Fringe Benefits

Section 18-2-412, MCA states:

"(1) To fulfill the obligation…a contractor or subcontractor may:

(a) pay the amount of fringe benefits and the basic hourly rate of pay that is part of the standard prevailing rate of wages directly to the worker or employee in cash;

(b) make an irrevocable contribution to a trustee or a third person pursuant to a fringe benefit fund, plan, or program that meets the requirements of the Employee Retirement Income Security Act of 1974 or that is a bona fide program approved by the U. S. department of labor; or

(c) make payments using any combination of methods set forth in subsections (1)(a) and (1)(b) so that the aggregate of payments and contributions is not less than the standard prevailing rate of wages, including fringe benefits and travel allowances, applicable to the district for the particular type of work being performed.

(2) The fringe benefit fund, plan, or program described in subsection (1)(b) must provide benefits to workers or employees for health care, pensions on retirement or death, life insurance, disability and sickness insurance, or bona fide programs that meet the requirements of the Employee Retirement Income Security Act of 1974 or that are approved by the U. S. department of labor."

Fringe benefits are paid for all hours worked (straight time and overtime hours). However, fringe benefits are not to be considered a part of the hourly rate of pay for calculating overtime, unless there is a collectively bargained agreement in effect that specifies otherwise.

H. Dispatch City

ARM, 24.17.103(11), defines dispatch city as *"…the courthouse in the city from the following list which is closest to the center of the job: Billings, Bozeman, Butte, Great Falls, Helena, Kalispell, Miles City, Missoula and Sidney."*

I. Zone Pay

Zone pay is not travel pay. ARM, 24.17.103(25), defines zone pay as *"…an amount added to the base pay; the combined sum then becomes the new base wage rate to be paid for all hours worked on the project. Zone pay must be determined by measuring the road miles one way over the shortest practical maintained route from the dispatch city to the center of the job."* See section H above for a list of dispatch cities.

J. Computing Travel Benefits

ARM, 24.17.103(23), states *" 'Travel pay,' also referred to as 'travel allowance,' is and must be paid for travel both to and from the job site, except those with special provisions listed under the classification. The rate is determined by measuring the road miles one direction over the shortest practical maintained route from the dispatch city or the employee's home, whichever is closer, to the center of the job."* See section H above for a list of dispatch cities.

K. Per Diem

ARM, 24.17.103(19), states *" 'Per diem' typically covers costs associated with board and lodging expenses. Per diem is paid when an employee is required to work at a location outside the daily commuting distance and is required to stay at that location overnight or longer."*

L. Apprentices

Wage rates for apprentices registered in approved federal or state apprenticeship programs are contained in those programs. Additionally, Section 18-2-416(2), MCA states, *"…The full amount of any applicable fringe benefits must be paid to the apprentice while the apprentice is working on the public works contract."* Apprentices not registered in approved federal or state apprenticeship programs will be paid the appropriate journey level prevailing wage rate when working on a public works contract.

M. Posting Notice of Prevailing Wages
Section 18-2-406, MCA, provides that contractors, subcontractors, and employers who are *"…performing work or providing construction services under public works contracts, as provided in this part, shall post in a prominent and accessible site on the project or staging area, not later than the first day of work and continuing for the entire duration of the project, a legible statement of all wages and fringe benefits to be paid to the employees."*

N. Employment Preference
Sections 18-2-403 and 18-2-409, MCA require contractors to give preference to the employment of bona fide Montana residents in the performance of work on public works contracts.

O. Projects of a Mixed Nature
Section 18-2-418, MCA states:

"(1) The contracting agency shall determine, based on the preponderance of labor hours to be worked, whether the public works construction services project is classified as a highway construction project, a heavy construction project, or a building construction project.

(2) Once the project has been classified, employees in each trade classification who are working on that project must be paid at the rate for that project classification"

P. Occupations Definitions
You can find definitions for these occupations on the following Bureau of Labor Statistics website:
http://www.bls.gov/oes/current/oes_stru.htm

Q. Welder Rates
Welders receive the rate prescribed for the craft performing an operation to which welding is incidental.

R. Foreman Rates
Rates are no longer set for foremen. However, if a foreman performs journey level work, the foreman must be paid at least the journey level rate.

S. Proper Classification for Pipefitter and Laborer/Pipelayer Work on Water and Waste Water Treatment Plants The proper classification for the following work is Pipefitter, when it is performed inside a building structure or performed at a location which will later be inside of a building: Joining steel pipe larger than 12 inches in diameter with bolted flange connections that has been pre-fabricated off site and does not require any modification such as cutting, grinding, welding, or other fabrication in order to be installed. All other work previously classified as pipefitter remains in that classification. The proper classification for that work when it is at a location that will always be outside a building is Pipelayer, which is under the Laborer Group 3 classification.

WAGE RATES

BOILERMAKERS

Wage	Benefit
$35.30	$34.00

Duties Include:
Construct, assemble, maintain, and repair stationary steam boilers, boiler house auxiliaries, process vessels, pressure vessels and penstocks. Bulk storage tanks and bolted steel tanks.

Travel and Per Diem:
No travel or per diem established.

↑ Back to Table of Contents

BRICK, BLOCK, AND STONE MASONS

Wage	Benefit
$32.32	$16.78

Travel:
0-70 mi. free zone
>70-90 mi. $60.00/day
>90 mi. $80.00/day

↑ Back to Table of Contents

CARPENTERS

Wage	Benefit
$36.49	$17.45

Zone Pay:
0-30 mi. free zone
>30-60 mi. base pay + $4.00/hr.
>60 mi. base pay + $6.00/hr.

↑ Back to Table of Contents

CEMENT MASONS AND CONCRETE FINISHERS

Wage	Benefit
$38.54	**$17.04**

Duties Include:
Smooth and finish surfaces of poured concrete, such as floors, walks, sidewalks, or curbs. Align forms for sidewalks, curbs, or gutters.

Zone Pay:
0-30 mi free zone
30-60 mi base pay+2.95/hr.
>60 mi base pay+4.75/hr.

↑ Back to Table of Contents

CONSTRUCTION EQUIPMENT OPERATORS GROUP 1

Wage	Benefit
$31.51	$15.73

This group includes but is not limited to:
Air Compressor; Auto Fine Grader; Belt Finishing; Boring Machine (Small); Cement Silo; Crane, A-Frame Truck Crane; Crusher Conveyor; DW-10, 15, and 20 Tractor Roller; Farm Tractor; Forklift; Form Grader; Front-End Loader, under 1 cu. yd; Oiler, Herman Nelson Heater; Mucking Machine; Oiler, All Except Cranes/Shovels; Pumpman.

Per Diem:
0-75 mi free zone
>75 mi $70/day

↑ Back to Table of Contents

CONSTRUCTION EQUIPMENT OPERATORS GROUP 2

Wage	Benefit
$32.88	$15.15

This group includes but is not limited to:
Air Doctor; Backhoe\Excavator\Shovel, up to and incl. 3 cu. yds; Bit Grinder; Bitunimous Paving Travel Plant; Boring Machine, Large; Broom, Self-Propelled; Concrete Travel Batcher; Concrete Float & Spreader; Concrete Bucket Dispatcher; Concrete Finish Machine; Concrete Conveyor; Distributor; Dozer, Rubber-Tired, Push, & Side Boom; Elevating Grader\Gradall; Field Equipment Serviceman; Front-End Loader, 1 cu. yd up to and incl. 5 cu. yds; Grade Setter; Heavy Duty Drills, All Types; Hoist\Tugger, All; Hydralift Forklifts & Similar; Industrial Locomotive; Motor Patrol (except finish); Mountain Skidder; Oiler, Cranes\Shovels; Pavement Breaker, EMSCO; Power Saw, Self-Propelled; Pugmill; Pumpcrete\Grout Machine; Punch Truck; Roller, other than Asphalt; Roller, Sheepsfoot (Self-Propelled); Roller, 25 tons and over; Ross Carrier; Rotomill, under 6 ft; Trenching Machine; Washing /Screening Plant

Per Diem:
0-75 mi free zone
>75 mi $70/day

↑ Back to Table of Contents

CONSTRUCTION EQUIPMENT OPERATORS GROUP 3

Wage	Benefit
$38.00	$16.35

Per Diem:
0-75 mi. free zone
>75 mi. $110.00/Day

This group includes but is not limited to:
Asphalt Paving Machine; Asphalt Screed; Backhoe\Excavator\Shovel, over 3 cu. yds; Cableway Highline; Concrete Batch Plant; Concrete Curing Machine; Concrete Pump; Cranes, Creter; Cranes, Electric Overhead; Cranes, 24 tons and under; Curb Machine\Slip Form Paver; Finish Dozer; Front-End Loader, over 5 cu. yds; Mechanic\Welder; Pioneer Dozer; Roller Asphalt (Breakdown & Finish); Rotomill, over 6 ft; Scraper, Single, Twin, or Pulling Belly-Dump; YO-YO Cat Haul Truck, Articulating Trucks, Vac Truck.

↑ Back to Table of Contents

CONSTRUCTION EQUIPMENT OPERATORS GROUP 4

Wage	Benefit
$38.00	$16.35

Per Diem:
0-75 mi. free zone
>75 mi. $110.00/Day

This group includes but is not limited to:
Asphalt\Hot Plant Operator; Cranes, 25 tons up to and incl. 44 tons; Crusher Operator; Finish Motor Patrol; Finish Scraper.

↑ Back to Table of Contents

CONSTRUCTION EQUIPMENT OPERATORS GROUP 5

Wage	Benefit
$38.00	$16.35

Per Diem:
0-75 mi. free zone
>75 mi. $110.00/Day

This group includes but is not limited to:
Cranes, 45 tons up to and incl. 74 tons.

↑ Back to Table of Contents

CONSTRUCTION EQUIPMENT OPERATORS GROUP 6

Wage	Benefit
$40.00	$16.35

Per Diem:
0-75 mi. free zone
>75 mi. $110.00/Day

This group includes but is not limited to:
Cranes, 75 tons up to and incl. 149 tons; Cranes, Whirley (All).

↑ Back to Table of Contents

CONSTRUCTION EQUIPMENT OPERATORS GROUP 7

Wage	Benefit
$42.00	$16.35

This group includes but is not limited to:
Cranes, 150 tons up to and incl. 250 tons; Cranes, over 250 tons—add $1.00 for every 100 tons over 250 tons; Crane, Tower (All); Crane Stiff-Leg or Derrick; Helicopter Hoist.

Per Diem:
0-75 mi. free zone
>75 mi. $110.00/Day

↑ Back to Table of Contents

CONSTRUCTION LABORERS GROUP 1/FLAG PERSON FOR TRAFFIC CONTROL

Wage	Benefit
$23.08	$11.82

Zone Pay:
0-30 mi. free zone
>30-60 mi. base pay + $3.05/hr.
>60 mi. base pay + $4.85/hr.

↑ Back to Table of Contents

CONSTRUCTION LABORERS GROUP 2

Wage	Benefit
$26.15	$13.44

This group includes but is not limited to:
General Labor; Asbestos Removal; Burning Bar; Bucket Man; Carpenter Tender; Caisson Worker; Cement Mason Tender; Cement Handler (dry); Chuck Tender; Choker Setter; Concrete Worker; Curb Machine-lay Down; Crusher and Batch Worker; Heater Tender; Fence Erector; Landscape Laborer; Landscaper; Lawn Sprinkler Installer; Pipe Wrapper; Pot Tender; Powderman Tender; Rail and Truck Loaders and Unloaders; Riprapper; Sign Erection; Guardrail and Jersey Rail; Spike Driver; Stake Jumper; Signalman; Tail Hoseman; Tool Checker and Houseman and Traffic Control Worker.

Zone Pay:
0-30 mi. free zone
>30-60 mi. base pay + $3.05/hr.
>60 mi. base pay + $4.85/hr.

↑ Back to Table of Contents

CONSTRUCTION LABORERS GROUP 3

Wage	Benefit
$26.07	$13.44

This group includes but is not limited to:
Concrete Vibrator; Dumpman (Grademan); Equipment Handler; Geotextile and Liners; High-Pressure Nozzleman; Jackhammer (Pavement Breaker) Non-Riding Rollers; Pipelayer; Posthole Digger (Power); Power Driven Wheelbarrow; Rigger; Sandblaster; Sod Cutter-Power and Tamper.

Zone Pay:
0-30 mi. free zone
>30-60 mi. base pay + $3.05/hr.
>60 mi. base pay + $4.85/hr.

↑ Back to Table of Contents

CONSTRUCTION LABORERS GROUP 4

Wage	Benefit
$26.76	$11.82

This group includes but is not limited to:
Hod Carrier***; Water Well Laborer; Blaster; Wagon Driller; Asphalt Raker; Cutting Torch; Grade Setter; High-Scaler; Power Saws (Faller & Concrete);
Powderman; Rock & Core Drill; Track or Truck Mounted Wagon Drill and Welder incl. Air Arc

Zone Pay:
0-30 mi. free zone
>30-60 mi. base pay + $3.05/hr.
>60 mi. base pay + $4.85/hr.

***Hod Carriers will receive the same amount of travel and/or subsistence pay as bricklayers when requested to travel.

↑ Back to Table of Contents

DIVERS

Stand-By	**No Rate Established**
Diving	**No Rate Established**

Depth Pay (Surface Diving)

0-20 ft.	free zone
>20-100 ft.	$2.00 per ft.
>100-150 ft.	$3.00 per ft.
>150-220 ft.	$4.00 per ft.
>220 ft.	$5.00 per ft.

Diving In Enclosures

0-25 ft.	free zone
>25-300 ft.	$1.00 per ft.

Zone Pay:
0-30 mi. free zone
>30-60 mi. base pay + $4.00/hr.
>60 mi. base pay + $6.00/hr.

↑ Back to Table of Contents

DIVER TENDERS

No Rate Established

The tender shall receive 2 hours at the straight time pay rate per shift for dressing and/or undressing a Diver when work is done under hyperbaric conditions.

Zone Pay:
0-30 mi. free zone
>30-60 mi. base pay + $4.00/hr.
>60 mi. base pay + $6.00/hr.

↑ Back to Table of Contents

ELECTRICIANS

Wage	Benefit
$38.86	$17.84

Travel:
No mileage due when traveling in employer's vehicle.

The following travel allowance is applicable when traveling in employee's vehicle:

0-18 mi. free zone
>18-60 mi. federal mileage rate/mi.

Per Diem
District 4
>60 mi. $80.00/day
Per Diem in Big Sky and West Yellowstone $125/day.

↑ Back to Table of Contents

INSULATION WORKERS - MECHANICAL (HEAT AND FROST)

No Rate Established

Duties Include:
Insulate pipes, ductwork or other mechanical systems.

Travel:
0-30 mi. free zone
>30-40 mi. $25.00/day
>40-50 mi. $35.00/day
>50-60 mi. $45.00/day
>60 mi. $130.00/day plus
- $0.56/mi. if transportation is not provided.
- $0.20/mi. if in company vehicle.

↑ Back to Table of Contents

IRONWORKERS – REINFORCING IRON AND REBAR WORKERS

Wage	Benefit
$34.83	$28.07

Duties Include:
Structural steel erection; assemble prefabricated metal buildings; cut, bend, tie, and place rebar; energy producing windmill type towers; metal bleacher seating; handrail fabrication and ornamental steel.

Travel:
All Districts
0-45 mi. free zone
>45-85 mi. $100.00/day
>85 mi. $150.00/day

↑ Back to Table of Contents

IRONWORKERS – STRUCTURAL IRON AND STEEL WORKERS

Wage	Benefit
$34.83	$28.07

Duties Include:
Structural steel erection; assemble prefabricated metal buildings; cut, bend, tie, and place rebar; energy producing windmill type towers; metal bleacher seating; handrail fabrication and ornamental steel.

Travel:
All Districts
0-45 mi. free zone
>45-85 mi. $100.00/day
>85 mi. $150.00/day

LINE CONSTRUCTION – EQUIPMENT OPERATORS

No Rate Established

Duties Include:
All work on substations

Travel:
No Free Zone
$60.00/day

↑ Back to Table of Contents

LINE CONSTRUCTION – GROUNDMAN

Wage	Benefit
$29.09	$8.36

Duties Include:
All work on substations

Travel:
No Free Zone
$60.00/day

↑ Back to Table of Contents

LINE CONSTRUCTION – LINEMAN

Wage	Benefit
$52.11	$18.75

Duties Include:
All work on substations

Travel:
No Free Zone
$60.00/day

↑ Back to Table of Contents

MILLWRIGHTS

Wage	Benefit
$45.26	$21.25

Zone Pay:
0-30 mi. free zone
>30-60 mi. base pay + $4.00/hr.
>60 mi. base pay + $6.00/hr.

↑ Back to Table of Contents

PAINTERS

Wage	Benefit
$25.00	No Rate Established

Travel and Per Diem:
No travel or per diem established.

↑ Back to Table of Contents

PILE BUCKS

Wage	Benefit
$36.49	$14.33

Duties Include:
Set up crane; set up hammer; weld tips on piles; set leads; insure piles are driven straight with the use of level or plum bob. Give direction to crane operator as to speed, and direction of swing. Cut piles to grade.

Zone Pay:
0-30 mi. free zone
>30-60 mi. base pay + $4.00/hr.
>60 mi. base pay + $6.00/hr.

↑ Back to Table of Contents

PLUMBERS, PIPEFITTERS, AND STEAMFITTERS

Wage	Benefit
$45.60	$21.26

Duties Include:
Assemble, install, alter, and repair pipe-lines or pipe systems that carry water, steam, air, other liquids or gases. Testing of piping systems, commissioning and retro-commissioning. Workers in this occupation may also install heating and cooling equipment and mechanical control systems.

Travel:
District 4
0-70 free zone
>70 mi.

- On jobs when employees do not work consecutive days: $0.55/mi. if employer doesn't provide transportation. Not to exceed two trips.
- On jobs when employees work any number of consecutive days: $110.00/day.

↑ Back to Table of Contents

SPRINKLER FITTERS

No Rate Established

Duties Include:
Duties Include but not limited to any and all fire protection systems: Installation, dismantling, inspection, testing, maintenance, repairs, adjustments, and corrections of all fire protection and fire control systems, including both overhead and underground water mains, all piping, fire hydrants, standpipes, air lines, tanks, and pumps used in connection with sprinkler and alarm systems.

Travel

The following travel allowance is applicable when traveling in employee's vehicle.

0-60 mi. free zone
>60-80 mi. $23.00/day
>80-100 mi. $33.00/day
>100 mi. $125.00/day + the IRS rate per mile and $8.92 for every 15 miles traveled for one trip out and one trip back

No travel allowance required when in employer's vehicle except when staying the night.
>100 mi. $125.00/day

↑ Back to Table of Contents

TRUCK DRIVERS

Pilot Car Driver	**No Rate Established**	
	Wage	**Benefit**
Truck Driver	$31.28	$9.37

Truck drivers include but are not limited to:
Combination Truck and Concrete Mixer and Transit Mixer; Dry Batch Trucks; Distributor Driver; Dumpman; Dump Trucks and similar equipment; Dumpster; Flat Trucks; Lumber Carriers; Lowboys; Pickup; Powder Truck Driver; Power Boom; Serviceman; Service Truck/Fuel Truck/Tireperson; Truck Mechanic; Trucks with Power Equipment; Warehouseman, Partsman, Cardex and Warehouse Expeditor; Water Trucks.

Zone Pay:
All Districts
0-30 mi. free zone
>30-60 mi. base pay + $3.05/hr.
>60 mi. base pay + .$4.85/hr.

Special Provision:
Zone pay only applies to the Truck Driver classification. No zone pay was established for Pilot Car Driver.

↑ Back to Table of Contents

SECTION 00 90 00

FUNDING AGENCY SPECIAL PROVISIONS FOR MONTANA PUBLIC FACILITY PROJECTS

This section supplements Division 0 of the Montana Public Works Standard Specifications, Seventh Edition, dated April 2021.

Included herein are supplemental general conditions that are required by Montana public facility funding programs or agencies listed in 1.1 below but are not included in the Montana Public Works Standard Specifications, Division 0.

ARTICLE 1. SPECIAL PROVISIONS

1.1 FUNDING AGENCIES

This project is being funded with funds from one or more of the following public facility funding programs or agencies:

Drinking Water or Water Pollution Control State Revolving Fund Loan Program (SRF)
American Rescue Plan Act (ARPA)
~~Renewable Resource Grant and Loan Program (RRGL)~~
~~Montana Coal Endowment Program (MCEP)~~
~~United States Department of Agriculture Rural Development (USDA/RD)~~
~~Community Development Block Grant Program (CDBG)~~

1.1.1 Applicable Funding Agency Special Provisions

In addition to Section 1.2 below, the following sections also apply as indicated:

___X___Section 1.3 (Additional SRF Requirements)
___X___Section 1.4 (Additional ARPA Requirements)
___X___Exhibit A-1 (SRF Project Sign Detail)
___X___Exhibit C (Federal Labor Standards Provisions)
_____Exhibit D (Reserved)
___X___Exhibit E (Build America, Buy America Forms)

1.2 SPECIAL PROVISIONS FOR ALL FUNDING AGENCIES

The following requirements pertain to all the funding programs or agencies listed in 1.1 above. If project funding sources include any of the programs or agencies listed, the following general requirements must be met in addition to those required in the Montana Public Works Standard Specifications, Division 0:

1.2.1 Reports, Information, and Access to Records

The contractor, at such times and in such form as required by the owner (defined herein as the entity for which the project is being constructed) shall furnish reports pertaining to the work or services undertaken pursuant to this contract, the costs and obligations incurred or to be incurred in connection therewith, and any other matters covered by this contract.

The owner and any federal, state or local governmental agency having a valid interest in this project shall be permitted by the contractor to have full access to and the right to examine pertinent documents of the contractor involving transactions related to this contract during the period of the project and for three (3) years from the date of final payment or until all findings have been resolved to the satisfaction of the funding agencies.

1.2.2 Contractor Eligibility and Certification Regarding Debarment

The contractor certifies that the contractor's firm and the firm's principals are not debarred, suspended, or otherwise ineligible to receive any Montana public works contracts or subcontracts pursuant to 18-2-432 (2), MCA.

For federally funded projects, the contractor certifies that the contractor's firm and the firm's principals are not debarred, suspended, voluntarily excluded, or otherwise ineligible for participation in federally assisted contracts under Executive Order 12549, "Debarment and Suspension" (24 CFR 24.505).

1.2.3 Contractor Registration and Worker's Compensation Requirements

Title 39, Chapter 9, Parts 1 and 2 MCA stipulate contractor registration requirements for the State of Montana. Pursuant to 39-9-201 MCA, each construction contractor must be registered with the Montana Department of Labor and Industry. In accordance with 39-9-102 MCA, "construction contractor" means a person, firm, or corporation that, in the pursuit of an independent business, offers to undertake, undertakes, or submits a bid for construction.

No bid shall be considered that does not carry the bidder's Montana Contractor's Registration Number on the bid form.

Registration forms and additional information may be obtained by contacting the Montana Department of Labor and Industry, 1805 Prospect Ave., P.O. Box 8011, Helena, MT 59604-8011, or by calling 406-444-7734.

The contractor must provide certification that workers' compensation insurance will be maintained as required by the Montana Workers' Compensation Act (39-71-101 MCA).

1.2.4 Minimum Wage Requirements

Unless superseded by federal law, 18-2-401 MCA and 18-2-402 MCA require that each employer pay, as a minimum, the rate of wages, including fringe benefits and zone pay applicable for the work being performed, as provided in the current Montana Prevailing W age Requirements as determined by the Montana Department of Labor and Industry.

The current wage determination(s) must be included in the contract documents.

If the SRF Loan Program is funding the project in whole or in part, federal and state laws require that each employer pay, as a minimum, prevailing wages for each classification in accordance with the Federal Labor Standards Provisions (Davis-Bacon) **(Exhibit C)** or Montana Prevailing Wage Requirements, whichever is greater**.**

1.2.5 Compliance With State and Federal Laws and Regulations

All applicable laws, ordinances, rules and regulations of authorities having jurisdiction over construction of the project shall apply to the contract throughout.

The contractor must comply with all applicable state and federal occupational disease and health and safety laws and regulations.

1.2.6 Project Sign

Exhibit A-1 (*SRF Project Sign Details*):

All projects will have a sign erected at a prominent location near the major portion of the work in plain view of the general public prior to submittal of the first pay estimate. The sign will generally conform to the following:

"The CONTRACTOR, or such contractor as the ENGINEER may designate, when construction begins, shall erect a sign constructed of 4'X8'X¾" exterior plywood (A-B) and shall be supported by and bolted to two (2) 4"X4" posts with the bottom of the sign at a point at least two (2) feet above the ground line. The project sign shall be maintained in a good condition until project completion. The sign details are shown in **Exhibit A-1**. The letters shall be approximately three (3) inches in height.

The cost of the sign is incidental to the contract price. The sign shall remain the property of the owner. The sign shall be subject to agency approval prior to being erected.

1.2.7 Gross Receipts Withholding Requirements

Pursuant to Section 15-50-206(2)(3), MCA, the owner is required to withhold one percent (1%) of all payments due the contractor and is required to transmit such moneys to the Montana Department of Revenue as part of the public contractor's license fee. In like fashion, the contractor is required to withhold one percent (1%) from payments to subcontractors.

1.2.8 Clean Air and Clean Water Acts, Executive Order 11738 and EPA Regulations:

If this Contract exceeds $100,000, Contractor shall comply with all applicable standards, orders or requirements issued under Section 306 of the Clean Air Act (42 USC 1857(h)); Section 508 of the Clean Water Act (33 USC 1368); Executive Order 11738; and Environmental Protection Agency Regulations (40 CFR Part 15).

1.2.9 Montana Rules Regarding Equipment and the Introduction and Spread of Aquatic Invasive Species:

List all equipment that will be used for construction of the project and how the equipment will be used on land, bank and/or in water. Make sure your vehicles, watercraft, and all equipment are clean and free of weeds, weed seeds, and excess grease before using it on land or water. To prevent the spread of invasive species, to the extent practical, remove mud and vegetation from vehicles, heavy machinery, and all other equipment before moving between waters and work sites, especially when working in areas of known infestations. When working in water, drain water from machinery and let machinery dry before moving to another location. https://fwp.mt.gov/conservation/aquatic-invasive-species.

Requirements in Montana for equipment to be used in water. To prevent the spread of aquatic invasive species, remove (CLEAN) mud and aquatic plants from heavy machinery and other equipment before moving between waters and work sites. DRAIN water from machinery and let **DRY** completely before moving to another location.

a) Be sure the equipment is clean and free of weeds, weed seeds, and excess grease before using it in the water waterway.

b) Be sure you remove mud and aquatic plants from heavy machinery and other equipment before moving between waters and work sites, especially in waters known to be infested with aquatic invasive species.

c) Drain water from machinery and let dry before moving to another location.

d) Mandatory inspections are now required for all equipment that:
   - Has been previously used outside of Montana
   - Are destined for waters in Montana west of the Continental Divide that has been previously used east of the Continental Divide
   - Are destined for waters of the Flathead Basin that have been previously used outside of the Flathead Basin.

   Any equipment that falls into the scenarios laid out above **must** schedule an inspection by calling the state's Aquatic Invasive Species line at 406-444-2440 at least one week in advance of planned use.

1.3 ADDITIONAL SPECIAL PROVISIONS FOR SRF

1.3.1 Equal Employment Opportunity and Affirmative Action Requirements on Federally Assisted Construction Contracts

NOTICE OF REQUIREMENT FOR AFFIRMATIVE ACTION TO ENSURE EQUAL EMPLOYMENT OPPORTUNITY (EXECUTIVE ORDER 11246)

1. The Offeror's or Bidder's attention is called to the "Equal Opportunity Clause" and the "Standard Federal Equal Employment Specifications" set forth herein.

2. The goals and timetables for minority and female participation, expressed in percentage terms for the Contractor's aggregate workforce in each trade on all construction work in the covered area, are as follows:

Goals for minority participation in each trade 2.7%
Goals for female participation in each trade 6.9%

These goals are applicable to all the contractor's construction work (whether or not it is Federal or Federally assisted) performed in the covered area. If the contractor performs construction work in a geographical area located outside of the covered area, it shall apply the goals established for such geographical area where the work is actually performed. With regard to this second area, the contractor also is subject to the goals for both its federally involved and nonfederally involved construction.

The Contractor's compliance with the Executive Order and the regulations in 41 CFR Part 60-4 shall be based on its implementation of the Equal Opportunity Clause, specific affirmative action obligations required by the specifications set forth in 41 CFR 60-4.3(a), and its efforts to meet the goals. The hours of minority and female employment and training must be substantially uniform throughout the length of the contract, and in each trade, and the contractor shall make a good faith effort to employ minorities and women evenly on each of its projects. The transfer of minority or female employees or trainees from contractor to contractor or from project to project for the sole purpose of meeting the contractor's goals shall be a violation of the contract, the Executive Order, and the regulations in 41 CFR Part 60-4. Compliance with the goals will be measured against the total work hours performed.

3. The contractor shall provide written notification to the Director of the Office of Federal Contract Compliance Programs within 10 working days of award of any construction subcontract in excess of $10,000 at any tier for construction work under the contract resulting from this solicitation. The notification shall list the name, address and telephone number for the subcontractor; employer identification number of the subcontractor, estimated dollar amount of the subcontract; estimated starting and completion dates of the subcontract; and the geographical area in which the contract is to be performed (see form on page 11).

4. As used in this Notice, and in the contract resulting from this solicitation, the "covered area" is the Missoula Economic Area.

This notice shall be included in, and shall be a part of, all solicitations for offers and bids on all federal and federally assisted construction contracts or subcontracts.

EQUAL OPPORTUNITY CLAUSE

The Equal Opportunity Clause published at 41 CFR Part 60-1.4(b) is required to be included in, and is part of, all nonexempt federally assisted construction contracts and subcontracts. The Equal Opportunity Clause shall be considered to be a part of every contract and subcontract required by the regulations in this part to include such a clause, whether or not it is physically incorporated in such contracts.

In addition to the clause described above, all federal contracting officers, all applicants, and all non-construction contractors, as applicable, shall include the specifications set forth in this section in all federal and federally assisted construction contracts in excess of $10,000 to be performed in geographical areas designated by the Director pursuant to §60-4.6 of this part and in construction subcontracts in excess of $10,000 necessary in whole or in part to the performance of non-construction Federal contracts and subcontracts covered under the

Executive Order.

STANDARD FEDERAL EQUAL EMPLOYMENT OPPORTUNITY CONSTRUCTION CONTRACT SPECIFICATIONS (EXECUTIVE ORDER 11246)

1. As used in these specifications:
a. "Covered Area" means the geographical area described in the solicitation from which this contract resulted;
b. "Director" means Director, Office of Federal Contract Compliance Programs, United States Department of Labor, or any person to whom the Director delegates authority;
c. "Employer identification number" means the Federal Social Security number used on the employer's quarterly Federal Tax Return, U.S. Treasury Department Form 941.
d. "Minority" includes:
(i) Black (all persons having origins in any of the Black African racial groups not of Hispanic origin);
(ii) Hispanic (all persons of Mexican, Puerto Rican, Cuban, Central or South American or other Spanish Culture or origin, regardless of race);
(iii) Asian and Pacific Islander (all persons having origins in any of the original peoples of the Far East, Southeast Asia, the Indian Subcontinent, or the Pacific Islands);
(iv) American Indian or Alaskan Native (all persons having origins in any of the original peoples of North America and maintaining identifiable tribal affiliations through membership and participation or community identification).

2. Whenever the contractor, or any subcontractor at any tier, subcontracts a portion of the work involving any construction trade, it shall physically include in each subcontract in excess of $10,000 the provisions of these specifications and the Notice which contains the applicable goals for minority and female participation and which is set forth in the solicitations from which this contract resulted.

3. If the contractor is participating (pursuant to 41 CFR 60-4.5) in a Hometown Plan approved by the U.S. Department of Labor in the covered area either individually or through an association, its affirmative action obligations on all work in the Plan area, (including goals and timetables) shall be in accordance with that Plan for those trades which have unions participating in the Plan. Contractors must be able to demonstrate their participation in and compliance with the provisions of any such Hometown Plan. Each contractor or subcontractor participating in an approved Plan is individually required to comply with its obligations under the EEO clause, and to make a good faith effort to achieve each goal under the Plan in each trade in which it has employees. The overall good faith performance by other contractors or subcontractors toward a goal in an approved Plan does not excuse any covered contractor's or subcontractor's failure to take good faith efforts to achieve the Plan goals and timetables.

4. The contractor shall implement the specific affirmative action standards provided in paragraphs (7)(a) through (p) of these specifications. The goals set forth in the solicitation from which this contract resulted are expressed as percentages of the total hours of employment and training of minority and female utilization the contractor should reasonably by able to achieve in each construction trade in which it has employees in the covered area. Covered Construction contractors performing construction work in geographical areas where they do not have a Federal or federally assisted construction contract shall apply the minority and female goals established for the geographical area where the work is being performed. Goals are published periodically in the federal register in notice form, and such notices may be obtained from any Office of Federal Contract Compliance Programs office or from Federal procurement contracting officers. The contractor is expected to make substantially uniform progress toward its goals in each craft during the period specified.

5. Neither the provisions of any collective bargaining agreement, nor the failure by a union with whom the contractor has a collective bargaining agreement, to refer either minorities or women shall excuse the contractor's obligations under these specifications, Executive Order 11246, or the regulations promulgated pursuant thereto.

6. In order for the non-working training hours of apprentices and trainees to be counted in meeting the goals, such apprentices and trainees must be employed by the contractor during the training period, and the contractor must have made a commitment to employ the apprentices and trainees at the completion of

their training, subject to the availability of employment opportunities. Trainees must be trained pursuant to training programs approved by the U.S. Department of Labor.

7. The contractor shall take specific affirmative actions to ensure equal employment opportunity. The evaluation of the contractor's compliance with these specifications shall be based upon its effort to achieve maximum results from its actions. The contractor shall document these efforts fully, and shall implement affirmative action steps at least as extensive as the following:

a. Ensure and maintain a working environment free of harassment, intimidation, and coercion at all sites, and in all facilities at which the contractor's employees are assigned to work. The contractor, where possible, will assign two or more women to each construction project. The contractor shall specifically ensure that all foremen, superintendents, and other on-site supervisory personnel are aware of and carry out the contractor's obligation to maintain such a working environment, with specific attention to minority or female individuals working at such sites or in such facilities.

b. Establish and maintain a current list of minority and female recruitment sources, provide written notification to minority and female recruitment sources and to community organizations when the contractor or its unions have employment opportunities available, and maintain a record of the organizations' responses.

c. Maintain a current file of the names, addresses, and telephone numbers of each minority and female off-the-street applicant and minority or female referral from a union, a recruitment source or community organization and of what action was taken with respect to each such individual. If such individual was sent to the union hiring hall for referral and was not referred back to the contractor by the union or, if referred, not employed by the contractor, this shall be documented in the file with the reason therefor, along with whatever additional actions the contractor may have taken.

d. Provide immediate written notification to the Director when the union or unions with which the Contractor has a collective bargaining agreement has not referred to the Contractor a minority person or woman sent by the Contractor, or when the Contractor has other information that the union referral process has impeded the Contractor's efforts to meet its obligations.

e. Develop on-the-job training opportunities and/or participate in training programs for the areas which expressly include minorities and women, including upgrading programs and apprenticeship and trainee programs relevant to the contractor's employment needs, especially those programs funded or approved by the Department of Labor. The contractor shall provide notice of these programs to the sources compiled under (7)(b) above.

f. Disseminate the contractor's EEO policy by providing notice of the policy to unions and training programs and requesting their cooperation in assisting the contractor in meeting its EEO obligations; by including it in any policy manual and collective bargaining agreement; by publicizing it in the company newspaper, annual report, etc.; by specific review of the policy with all management personnel and with all minority and female employees at least once a year; and by posting the company EEO policy on bulletin boards accessible to all employees at each location where construction work is performed.

g. Review, at least annually, the company's EEO policy and affirmative action obligations under these specifications with all employees having any responsibility for hiring, assignment, layoff, termination or other employment decisions including specific review of these items with on-site supervisory personnel such as superintendents, general foremen, etc., prior to the initiation of construction work at any job site. A written record shall be made and maintained identifying the time and place of these meetings, persons attending, subject matter discussed, and disposition of the subject matter.

h. Disseminate the contractor's EEO policy externally by including it in any advertising in the news media, specifically including minority and female news media, and providing written notification to and discussing the contractor's EEO policy with other contractors and subcontractors with whom the contractor does or anticipates doing business.

i. Direct its recruitment efforts, both oral and written, to minority, female and community organizations, to

schools with minority and female students and to minority and female recruitment and training organizations serving the contractor's recruitment area and employment needs. Not later than one month prior to the date for the acceptance of applications for apprenticeship or other training by any recruitment source, the contractor shall send written notification to organizations such as the above, describing the openings, screening procedures, and tests to be used in the selection process.

j. Encourage present minority and female employees to recruit other minority persons and women and, where reasonable, provide after school, summer and vacation employment to minority and female youth both on the site and in other areas of a contractor's workforce.

k. Validate all tests and other selection requirements where there is an obligation to do so under 41 CFR Part 60-3.

l. Conduct, at least annually, an inventory and evaluation at least of all minority and female personnel for promotional opportunities and encourage these employees to seek or to prepare for, through appropriate training, etc., such opportunities.

m. Ensure that seniority practices, job classifications, work assignments and other personnel practices, do not have a discriminatory effect by continually monitoring all personnel and employment related activities to ensure that the EEO policy and the contractor's obligations under these specifications are being carried out.

n. Ensure that all facilities and company activities are non-segregated except that separate or single-user toilet and necessary changing facilities shall be provided to assure privacy between the sexes.

o. Document and maintain a record of all solicitations of offers for subcontracts from minority and female construction contractors and suppliers, including circulation of solicitations to minority and female contractor associations and other business associations.

p. Conduct a review, at least annually, of all supervisor's adherence to and performance under the contractor's EEO policies and affirmative action obligations.

8. Contractors are encouraged to participate in voluntary associations which assist in fulfilling one or more of their affirmative action obligations (7)(a) through (p). The efforts of a contractor association, joint contractor-union, contractor-community, or other similar group of which the contractor is a member and participant, may be asserted as fulfilling any one or more of its obligations under (7)(a) through (p) of these specifications provided that the contractor actively participates in the group, makes every effort to assure that the group has positive impact on the employment of minorities and women in the industry, ensures that the concrete benefits of the program are reflected in the contractor's minority and female workforce participation, makes a good faith effort to meet its individual goals and timetables, and can provide access to documentation which demonstrates the effectiveness of actions taken on behalf of the contractor. The obligation to comply, however, is the contractor's and failure of such a group to fulfill an obligation shall not be a defense for the contractor's noncompliance.

9. A single goal for minorities and a separate single goal for women have been established. The contractor, however, is required to provide equal employment opportunity and to take affirmative action for all minority groups, both male and female, and all women, both minority and non-minority. Consequently, the contractor may be in violation of the Executive Order if a particular group is employed in a substantially disparate manner (for example, even though the contractor has achieved its goals for women generally, the contractor may be in violation of the Executive order if a specific minority group of women is under-utilized).

10. The contractor shall not use the goals and timetables of affirmative action standards to discriminate against any person because of race, color, religion, sex, or national origin.

11. The contractor shall not enter into any subcontract with any person or firm debarred from government contracts pursuant to Executive Order 11246.

12. The contractor shall carry out such sanctions and penalties for violation of these specifications and of

the Equal Opportunity Clause, including suspension, termination and cancellation of existing subcontracts as may be imposed or ordered pursuant to Executive Order 11246, as amended, and its implementing regulations, by the Office of Federal Contract Compliance Programs. Any contractor who fails to carry out such sanctions and penalties shall be in violation of these specifications and Executive Order 11246, as amended.

13. The contractor, in fulfilling its obligations under these specifications, shall implement specific affirmative action steps, at least as extensive as those standards prescribed in paragraph (7) of these specifications, so as to achieve maximum results from its efforts to ensure equal employment opportunity. If the contractor fails to comply with the requirements of the Executive Order, the implementing regulations, or these specifications, the Director shall proceed in accordance with 41 CFR60-4.8.

14. The contractor shall designate a responsible official to monitor all employment related activity to ensure that the company EEO policy is being carried out, to submit reports relating to the provisions hereof as may be required by the government and to keep records. Records shall at least include for each employee the name, address, telephone numbers, construction trade, union affiliation if any, employee identification number when assigned, social security number, race, sex, status (e.g., mechanic, apprentice, trainee, helper, or laborer), dates of changes in status, hours worked per week in the indicated trade, rate of pay, and locations at which the work was performed. Records shall be maintained in an easily understandable and retrievable form; however, to the degree that existing records satisfy this requirement, contractors shall not be required to maintain separate records.

15. Nothing herein provided shall be construed as a limitation upon the application of other laws which establish different standards of compliance or upon the application of requirements for the hiring of local or other area residents (e.g., those under the Public Works Employment Act of 1977 and the Community Development Block Grant Program)

CONTRACTOR'S NAME, ADDRESS & TELEPHONE NUMBER

_____

_____

_____

Return to:
USDOL/ESA/OFCCP
Denver District Office
1999 Broadway-Suite 1177
P.O. BOX 46550
Denver, CO 80201-6550

CONTRACTOR' EMPLOYER ID NUMBER:_____

CONTRACT INFORMATION

PROJECT AND LOCATION:				
Dollar Amount of Contract	Estimated Start Date	Estimated Completion Date	Contract No.	Geographical Area

NOTIFICATION OF SUBCONTRACTS AWARDED (>$10,000)

Subcontractors Name, Address, & Phone Number	Employer ID Number of Subcontractor	Estimated $ Amount of Subcontract	Estimated Start Date	Estimated Completion Date

1.3.2 Guidance for Participation by Disadvantaged Business (DBE) Enterprises In United States Environmental Protection Agency Programs of 40 CFR 33.

The contractor shall not discriminate on the basis of race, color, national origin or sex in the performance of this contract. The contractor shall carry out applicable requirements of 40 CFR Part 33 in the award and administration of contracts awarded under EPA financial assistance agreements. Failure by the contractor to carry out these requirements is a material breach of this contract which may result in the termination of this contract or other legally available remedies.

A. REQUIREMENTS

1. The recipient and prime contractor will exercise good faith efforts to attract and utilize small, minority, and women's business (DBEs) enterprises primarily through outreach, recruitment, and race/gender neutral activities. At a minimum, the recipient and project bidders will follow the six affirmative steps below:

a. Ensure DBEs are made aware of contracting opportunities to the fullest extent practicable through outreach and recruitment activities including placing DBEs on solicitation lists and soliciting them whenever they are potential sources;

b. Make information on forthcoming opportunities available to DBEs and arrange time frames and establish delivery schedules, when the requirements of the work permit, which will encourage participation by DBEs;

c. Consider in the contracting process whether firms competing for large contracts could subcontract with DBEs; including dividing total requirements, when economically feasible, into small tasks or quantities to permit maximum participation by DBEs;

d. Encourage contracting with a consortium of DBEs when a contract is too large for one of these firms to handle individually;

e. Using the services of the Small Business Administration and the Office of Minority Business Enterprise of the U.S. Department of Commerce, as appropriate; and

f. Require a. through e. to be taken if subcontracts are awarded.

B. FAIR SHARE OBJECTIVE

1. The fair share objective for this project is **2%MBE's** and **3% WBE's**.

C. DEFINITIONS

1. Minority Business Enterprise (MBE) is a business concern which is:

a. Certified as socially and economically disadvantaged by the Small Business Administration;

(1) Socially disadvantaged individuals are those who have been subjected to racial or ethnic prejudice or cultural bias because of their identity as a member of a group without regard to their individual qualities.

(2) Economically disadvantaged individuals are those socially disadvantaged individuals whose ability to compete in the free enterprise system is impaired due to diminished capital and credit opportunities, as compared to others in the same business area who are not socially disadvantaged. In determining the degree of diminished credit and capital opportunities, the Small Business Administration shall consider, but not be limited to, the assets and net worth of such socially disadvantaged individuals. Individuals who certify that they are members of named groups (Black Americans, Hispanic Americans, Native Americans, Asian-Pacific Americans, Asian-Indian Americans), are to be considered socially and economically disadvantaged. Economically and socially disadvantaged individuals are deemed to include women.

b. Certified as a minority business enterprise by a State or Federal agency; or

c. An independent business concern which is at least 51 percent owned and controlled by minority group member(s).

(1) A minority group member is an individual who is a citizen of the United States and one of the following:

(a) Black American:

(b) Hispanic American (with origins from Puerto Rico, Mexico, Cuba, South or Central America)

(c) Native American (American Indian, Eskimo, Aleut, native Hawaiian); or

(d) Asian-Pacific American (with origins from Japan, China, the Philippines, Vietnam, Korea, Samoa, Guam, the U.S. Trust Territories of the Pacific, Northern Marianas, Laos, Cambodia, Taiwan or the Indian subcontinent).

(2) In order to satisfy the third criteria of the MBE definition, the minority ownership's interest must be real, substantial and continuing. Such interest is characterized by:

(a) Risk of loss/share of profit commensurate with the proportional ownership; and

(b) Receipt of the customary incidents of ownership, such as compensation (i.e. salary and other personnel compensation).

(3) A minority owner must have and exercise control of the business decisions. Characteristics of control include, but are not limited to:

(a) Authority to sign bids and contracts;

(b) Decisions in price negotiations;

(c) Incurring liabilities for the firm;

(d) Final staffing decisions;

(e) Policy-making; and

(f) General company management decisions.

(4) Only those firms performing a useful business function according to custom and practice in the industry are qualified as MBEs. Acting merely as a passive conduit of funds to some other firm where such activity is unnecessary to accomplish the project does not constitute a "useful business function according to custom and practice in the industry." The purpose of this approach is to discourage the use of MBE "fronts" and limit the creation of an artificial supplier and broker marketplace.

2. Women's Business Enterprise (WBE) is a business which is certified as such by a State or Federal agency, or which meets the following definition:

"A women's business enterprise is an independent business concern which is at least 51 percent owned by a woman or women, who also control and operate it. Determination of whether a business is at least 51 percent owned by a woman or otherwise qualified WBE which is 51 percent owned by a married woman in a community property State will not be disqualified because her husband has a 50 percent interest in her share. Similarly, a business which is 51 percent owned by a married man and 49 percent owned by an unmarried woman will not become a qualified WBE by virtue of his wife's 50 percent interest in his share of the business."

As in the case of a MBE, only United States citizens will be deemed to be WBEs. Similar to the MBE criteria, WBE should meet the criteria cited in subparagraphs C.1.c.(2), (3), and (4).

3. Fair Share or Fair Share Objective A fair share or a fair share objective is an amount of funds reasonably commensurate with the total project funding and the availability of qualified MBEs and W BEs, taking into account experience on EPA-funded projects and other comparable projects in the area. A fair share objective does not constitute an absolute requirement, but a commitment on the part of the bidder to exercise good faith *efforts* as defined in this section to use MBEs and WBEs to achieve the fair share objective.

4. Small Business (SBE). Any business entity, including its affiliates, that is independently owned and operated, and not dominant in its field of operations in which it is bidding on Government contracts, and qualified as a small business under the criteria and size standards set forth in 13 CFR Part 121.

5. Small Business in a Rural Area. A small business in a rural area (SBRA) is a business entity meeting the definition of a small business, and is located and conducts its principal operations in a geographical area (county) listed in the Small Business Administration's Listing of Non-Metropolitan Counties by State.

6. Recipient. A party receiving SRF financial assistance.

7. Project. The work financed through an SRF loan.

8. Bidder. A party seeking to obtain a contract with a recipient through a competitive, advertised, sealed bid process.

9. Offeror. A party seeking to obtain a contract with a recipient through a negotiative procurement process.

10. Prime Contractor. A party that has obtained a contract with a recipient through a competitive, advertised, sealed bid process.

11. Good Faith Efforts. Good faith efforts by a recipient, prime contractor, and/or bidder/offeror means efforts to attract and utilize SBEs, MBEs, and W BEs (DBEs) primarily through outreach, recruitment, and race/gender neutral activities. The following are examples of activities to assist recipients, prime contractors and/or bidders/offerors to comply with good faith efforts.

a. Include qualified SBEs, MBEs, and WBEs on solicitation lists.

(1) Maintain and update a listing of qualified SBEs, MBEs, and WBEs and SBRAs that can be solicited for supplies, construction and/or services.

(2) Provide listings to all interested parties who requested copies of the bidding or proposing documents.

(3) Contact appropriate sources within your geographic area and State to identify qualified MBEs and WBEs for placement on your minority and women's business listings.

(4) Utilize other MBE/WBE listings such as those of the State's Minority Business Office, the Small Business Administration, Minority Business Development Agency, US EPA- Office of Small and Disadvantaged Business Utilization (OSDBU) and the Department of Transportation.

(5) Have the State environmental agency personnel review this solicitation list.

b. Ensure that SBEs, MBEs, and WBEs are solicited.

(1) Conduct meetings, conferences, and follow-ups with SBEs, MBEs, W BEs, and SBRAs, small, minority and/or women's business associations, minority media, etc., to inform these groups of opportunities to provide supplies, services, and construction.

(2) MBE utilization is facilitated if the recipient or prime contractor advertises through the minority media. Such advertisements may include, but are not limited to, contracting and subcontracting opportunities, hiring and employment, or any other matter related to the project.

(3) Conduct pre bid, pre-solicitation, and post-award conferences to ensure that consultants, suppliers, and builders solicit SBEs, MBEs, WBEs, and SBRAs.

(4) Provide bidders and offerors with listings of qualified SBEs, MBEs, WBEs, and SBRAs and establish that a fair share of contracts/procurements should be awarded to these groups.

(5) Advertise in general circulation, trade publications, State agency publications of identified source, minority or women's business focused media, etc., concerning contracting opportunities on your projects. Maintain a list of minority or women's business-focused publications that may be utilized to solicit MBEs or WBEs.

(6) Provide interested SBEs, MBEs, WBEs, or SBRAs with adequate information about plans, specifications, timing and other requirements of the proposed projects.

(7) Provide SBE, SBRA, MBE or WBE trade organizations with succinct summaries of solicitations.

(8) Notify SBEs, MBEs, WBEs, or SBRAs of future procurement opportunities so that they may establish bidding solicitations and procurement plans.

c. Make information on forthcoming opportunities available to DBEs and arrange time frames and establish delivery schedules, where requirements of the work permit, which will encourage participation by SBEs, MBEs, WBEs and SBRAs.

(1) Consider lead times and scheduling requirements often needed by SBE, MBE, WBE or SBRA participation.

(2) Develop realistic delivery schedules which may provide for greater SBE, MBE, WBE or SBRA participation.

(3) Whenever possible, post solicitations for bids or proposals for a minimum of 30 calendar days before the bid or proposal closing date

d. Consider in the contracting process whether firms competing for large contracts could subcontract with DBEs; including dividing total requirements when economically feasible, into small tasks or quantities to permit maximum participation of SBEs, MBEs, WBEs and SBRAs.

(1) Perform an analysis to identify portions of work that can be divided and performed by qualified SBEs, MBEs, WBEs and SBRAs.

(2) Scrutinize the elements of the total project to develop economically feasible units of work that are within the bonding range of SBEs, MBEs, WBEs and SBRAs.

(3) Analyze bid packages for compliance with the good faith efforts to afford SBEs, MBEs, WBEs and SBRAs maximum participation.

(4) Encourage contracting with a consortium of SBEs, MBEs, WBEs, and SBRAs when a contract is too large for one of these firms to handle individually

e. Use the services and assistance of the Small Business Administration and the Minority Business Development Agency of the US Department of Commerce, as appropriate.

(1) Use the services of outreach programs sponsored by the Minority Business Development Agency and/or the Small Business Administration to recruit bona fide firms for placement on SBEs', MBEs', W BEs', or SBRAs' bidders lists to assist these firms in the development of bid packaging.

(2) Seek out Minority Business Development Centers (MBDCs) to assist recipients and prime contractors in identifying MBEs for potential work opportunities on this project.

f. If the prime contractor awards subcontracts, require the prime contractor to take the steps in paragraphs a. through e. of this section.

D. ADDITIONAL CONTRACT PROVISIONS

1. The prime contractor must pay its subcontractors for satisfactory performance no more than 30 days from the prime contractor's receipt of payment from the owner.

2. The prime contractor must notify the owner in writing prior to any termination of a DBE subcontractor for convenience.

3. If a DBE subcontractor fails to complete work under the subcontract for any reason, the prime contractor must employ the six good faith efforts if soliciting a replacement subcontractor, even if the fair share objectives have already been achieved.

E. REPORTING

1. Bidders/offerors shall demonstrate compliance with "good faith" efforts in order to be deemed responsible. Efforts could include maintaining phone/mail logs (see attached MBE/WBE Subcontractor Solicitation Sheet), submitting proof of DBE solicitation advertisements, completion of the on-line DBE quote request form located at https://app.mdt.mt.gov/dbeqt/, etc.. The owner may specify other methods of demonstrating compliance.

2. Documentation of a "good faith" effort should be submitted with the bid, or within seven (7) calendar days of the bid opening.

MBE/WBE SUBCONTRACTOR SOLICITATION INFORMATION						
Name, Address & Phone No. of Subcontractor Contacted	Date Request for Quote Sent	Description of Work Offered	Date of Phone Follow-up & Person Contacted	Amount of Quote or Reason for Not Quoting*	Quote Accepted? If not, list reason for rejection	Indicate MBE, WBE, or other Subcontractor

* - Use additional sheets if necessary.

The undersigned hereby certifies that the above information is true and correct:

Contractor:_____

By:_____
Signature
Title _____ Date:_____

1.3.3 Certification Regarding Debarment, Suspension and Other Responsibility Matters

A. INSTRUCTIONS

Under Executive Order 12549, an individual or organization debarred or excluded from participation in Federal assistance or benefit programs may not receive any assistance award under a Federal program, or a subagreement thereunder for $25,000 or more. The status of prospective individuals or organizations can be checked at:

https://www.sam.gov

A prospective prime contractor must submit a completed certification (see form on the following page) or explanation to the project owner for the project. Each prospective subcontractor must submit a completed certification or explanation to the prime contractor for the project.

B. HOW TO OBTAIN FORMS

Additional forms may be obtained from the State or may be reproduced.

_____
SRF Project Number

United States Environmental Protection Agency
Washington, DC 20460

Certification Regarding Debarment, Suspension, and Other Responsibility Matters

The prospective participant certifies to the best of its knowledge and belief that it and its principals:

(a) Are not presently debarred, suspended, proposed for debarment, declared ineligible, or voluntarily excluded from covered transactions by any Federal department or agency;

(b) Have not within a three year period preceding this proposal been convicted of or had a civil judgment rendered against them for commission of fraud or a criminal offense in connection with obtaining, attempting to obtain, or performing a public (Federal, State, or local) transaction or contract under a public transaction; violation of Federal or State antitrust statutes or commission of embezzlement, theft, forgery, bribery, falsification or destruction of records, making false statements, or receiving stolen property;

(c) Are not presently indicted for or otherwise criminally or civilly charged by a government entity (Federal, State, or local) with commission of any of the offenses enumerated in paragraph (1)(b) of this certification; and

(d) Have not within a three-year period preceding this application/proposal had one or more public transactions (Federal, State, or local) terminated for cause or default.

I understand that a false statement on this certification may be grounds for rejection of this proposal or termination of the award. In addition, under 18 USC Sec. 1001, a false statement may result in a fine of up to $10,000 or imprisonment for up to 5 years, or both.

_____
Typed Name & Title of Authorized Representative

_____
Signature of Authorized Representative Date

_____I am unable to certify to the above statements. My explanation is attached.

1.3.4 Prohibition against Listed Violated Facilities

A. REQUIREMENTS

(1) To comply with all the requirements of section 114 of the Clean Air Act, as amended (42 U.S.C. 1857, et seq., as amended by Pub. L. 92-604) and section 308 of the Clean Water Act (33 U.S.C. 1251, as amended), respectively, which relate to inspection, monitoring, entry, reports, and information, as well as other requirements specified in section 114 and section 308 of the Air Act and the Water Act, respectively, and all regulations and guidelines issued thereunder before the award of this contract.

(2) That no portion of the work required by this prime contract will be performed in a facility listed on the Environmental Protection Agency list of violating facilities on the date when this contract was awarded unless and until the EPA eliminates the name of such facility or facilities from the listing.

(3) To use his best efforts to comply with clean air and clean water standards at the facilities in which the contract is being performed.

(4) To insert the substance of the provisions of this clause, including this paragraph (4), in any nonexempt subcontract.

B. DEFINITIONS

(1) Air Act means the Clean Air Act, as amended (42 U.S.C. 1857 et seq.).

(2) Water Act means the Clean Water Act, as amended (33 U.S.C. 1251 et seq.).

(3) Clean Air Standards means any enforceable rules, regulations, guidelines, standards, limitations, orders, controls, prohibitions, or other requirements which are contained in, issued under, or otherwise adopted under the Air Act or Executive Order 11738, an applicable implementation plan as described in section 110 (d) of the Air Act (42 U.S.C. 1857c-5(d)), an approved implementation procedure or plan under section 111 (c) or section 111(d), or an approved implementation procedure under section 112(d) of the Air Act (42 U.S.C. 1857c-7(d)).

(4) Clean Water Standards means any enforceable limitation, control, condition, prohibition, standard, or other requirement which is promulgated under the Water Act or contained in a permit issued to a discharger by the Environmental Protection Agency or by a State under an approved program, as authorized by section 402 of the Water Act (33 U.S.C. 1342), or by a local government to ensure compliance with pretreatment regulations as required by section 307 of Water Act (33 U.S.C. 1317).

(5) Compliance means compliance with clean air or water standards. Compliance shall also mean compliance with a schedule or plan ordered or approved by a court of competent jurisdiction, the Environmental Protection Agency in accordance with the requirements of the Air Act or Water Act and regulations.

(6) Facility means any building, plant, installation, structure, mine, vessel, or other floating craft, location, or site of operations, owned, leased, or supervised by a contractor or subcontractor, to be used in the performance of a contract or subcontract. Where a location or site of operations contains or includes more than one building, plant, installation, or structure, the entire location or site shall be deemed to be a facility except where the Director, Office of Federal Activities, Environmental Protection Agency, determines that independent facilities are located in one geographical area.

1.3.5 Discovery of Archaeological and other Historical Items

In the event of an archaeological find during any phase of construction, the following procedure will be followed:

(1) Construction shall be halted, with as little disruption to the archaeological site as possible.

(2) The Contractor shall notify the Owner who shall contact the State Historical Preservation Officer.

(3) The State Historical Preservation Officer may decide to have an archaeologist inspect the site and make recommendations about the steps needed to protect the site, before construction is resumed.

(4) The entire event should be handled as expediently as possible in order to hold the loss in construction time to a minimum while still protecting archaeological finds.

A similar procedure should be followed with regard to more recent historical resources. Should any artifacts, housing sites, etc., be uncovered, the same procedure should be followed as for an archaeological find.

In the event archaeological/historical data are evaluated to meet National Register criteria, the Advisory Council on Historic Preservation may be notified and asked to comment.

1.3.6 Williams-Steiger Occupational Safety and Health Act of 1970

A. AUTHORITY

(1) The contractor is subject to the provisions of the Williams-Steiger Occupational Safety and Health Act of 1970.

(2) These construction documents and the joint and several phases of construction hereby contemplated are to be governed, at all times, by applicable provisions of the Federal law(s) , including but not limited to the latest amendment of the following:

a. Williams-Steiger Occupational Safety and Health Act of 1970, Public Law 94-596;

b. Part 1910 - Occupational Safety and Health Standards, Chapter XVII of Title 29, Code of Federal Regulations;

c. Part 1926 - Safety and Health Regulations for Construction, Chapter XVII of Title 29, Code of Federal Regulations.

B. SAFETY AND HEALTH PROGRAM REQUIREMENTS

(1) This project, its prime contractor and its subcontractors, shall at all times be governed by Chapter XVII of Title 29, Code of Federal Regulations, Part 1926 - Safety and Health Regulations for Construction (29 CFR 22801), as amended to date.

(2) To implement the program and to provide safe and healthful working conditions for all persons, general project safety meetings will be conducted at the site at least once each month during the course of construction, by the construction superintendent or his/her designated safety officer. Notice of such meeting shall be issued not less than three (3) days prior, stating the exact time, location, and agenda to be included. Attendance by the owner, architect, general foreman, shop steward(s), and trades, or their designated representatives, witnessed in writing as such, shall be mandatory.

(3) To further implement the program, each trade shall conduct a short gang meeting, not less than once a week, to review project safety requirements mandatory for all persons during the coming week. The gang foreman shall report the agenda and specific items covered to the project superintendent, who shall incorporate these items in his/her daily log or report.

(4) The prime contractor and all subcontractors shall immediately report all accidents, injuries, or health hazards to the owner and architect, or their designated representatives, in writing. This shall not obviate any mandatory reporting under the provisions of the Occupational Safety and Health Act of 1970.

(5) This program shall become a part of the contract documents and the contract between the owner and prime contractor, prime contractor and all subcontractors, as though fully written therein

1.3.7 Wage Determination

The Contractor and all subcontractors shall pay for all labor employed at no less than the minimum standard prevailing rate of wages for each classification, which shall be the higher of either the Montana Prevailing Wage Rates or the Federal Davis-Bacon Prevailing Wage Rates.

Please refer to EXHIBIT C for Federal Labor Standards Provisions for Federally Assisted Construction Contracts.

If you have a question about complying with the prevailing wage regulations (occupations, payroll forms, payment of fringe benefits, travel or per diem, etc.), you should contact the Labor Standards Bureau Wage and Hour Unit of the Montana Department of Labor and Industry or visit their website: http://dli.mt.gov/

1.3.8 Access

1. The recipient must insure that representatives of the Environmental Protection Agency and the State will have access to project records and the project work whenever it is in preparation or progress and must provide proper facilities for such access and inspection. The recipient must allow the Regional Administrator, the Comptroller General of the United States, the State agency, or any authorized representative, to have access to any books, documents, plans, reports, papers, including records of contractors which are pertinent to the project for the purpose of making audit, examination, excerpts, copies, and transcriptions thereof. The recipient must insure that a party to a subagreement will afford access to such project work, sites, documents, and records.

1.3.9 Construction Site Erosion and Sediment Control Measures

Every effort shall be made by the contractors and subcontractors to prevent and correct problems associated with erosion and runoff processes which could occur during and after project construction. The efforts should be consistent with applicable local ordinances, the EPA Nonpoint Source Pollution Control Guidance and Department of Environmental Quality Stormwater Management Plan.

Wherever appropriate, the contractor's efforts shall reflect the following engineering principles:

1. When appropriate, land grading and excavating should be kept at a minimum to reduce the possibility of creating runoff and erosion problems which require extensive control measures.

2. Whenever possible, topsoil should be removed and stockpiled before grading begins.

3. Land exposure should be minimized in terms of area and time.

4. Exposed areas subject to erosion should be covered as quickly as possible by means of mulching or vegetation.

5. Natural vegetation should be retained whenever feasible.

6. Appropriate structural or agronomic practices to control runoff and sedimentation should be provided during and after construction.

7. Early completion of stabilized drainage systems (temporary and permanent systems) will substantially reduce erosion potential.

8. Roadways and parking lots should be paved or otherwise stabilized as soon as feasible.

9. Clearing and grading should not be started until a firm construction schedule is known and can be effectively coordinated with the grading and clearing activity.

1.3.10 Build America, Buy America (BABA) Requirements

On November 15, 2021, the "Infrastructure Investment and Jobs Act," (Public Law 117-58), which includes the Build America, Buy America Act (Public Law 117-58, Title IX, Subtitles A and B, Sections 70901-70941) was enacted. This law applies to most programs that receive federal funds including the Clean Water State Revolving Fund and the Drinking Water State Revolving Fund programs.

Section 70914(a) of the Act states that none of the funds made available for a Federal financial assistance program for infrastructure may be obligated for a project unless all of the iron, steel, manufactured products, and construction materials used in the project are produced in the United States.

For iron and steel, all manufacturing processes, from the initial melting stage through the application of coatings must occur in the United States. This includes products made primarily of iron or steel such as lined or unlined pipes and fittings, manhole covers and other municipal castings, hydrants, tanks, flanges, pipe clamps and restraints, valves, structural steel, and reinforced precast concrete and construction materials made primarily of iron or steel such as wire, cables, rebar, framing, joists, decking, grating, railings, stairs, and fencing.

The term "manufactured product" means the manufactured product was manufactured in the United States, and the cost of the components of the manufactured product that are mined, produced, or manufactured in the United States is greater than 55 percent of the total cost of all components of the manufactured product. This includes (but is not limited to) pumps, motors, drives, mixers, motorized screens, controls and switches, membrane bioreactor systems, membrane filtration systems, clarifiers, disinfection systems, HVAC systems, and skids that contain multiple components (e.g., treatment, pumping, etc.).

For construction materials, all manufacturing processes for the construction material occurred in the United States. This includes an article, material, or supply that is or consists primarily of non-ferrous metals (construction materials made of ferrous metals are covered under iron and steel), plastic- and polymer-based products including PVC, composite building materials, and polymers used in fiber optic cables, glass including optic glass, lumber, and drywall.

BABA CERTIFICATION FORMS – The Contractor must ensure that all qualifying iron and steel components, manufactured products, and construction materials used in the project have met the BABA requirements. To verify BABA compliance, the Contractor must obtain a "Manufacturer Certification" form (or equivalent statement) from the product manufacturer. Upon completion of the project, the Contractor shall provide the Owner with the "Contractor Certification" form <u>and</u> copies of all "Manufacturer Certification" forms and/or statements. The referenced certification forms are located in Exhibit E of Section 00900.

BABA WAIVERS - A waiver from the Build America, Buy America requirements may be issued by the head of a Federal agency if it is found that: 1) applying the domestic content procurement preference would be inconsistent with the public interest (a "public interest waiver"); 2) types of iron, steel, manufactured products, or construction materials are not produced in the United States in sufficient and reasonably available quantities or of a satisfactory quality (a "nonavailability waiver"); or 3) inclusion of iron, steel, manufactured products, or construction materials produced in the United States will increase the cost of the overall project by more than 25 percent (an "unreasonable cost waiver"). Waiver requests must be submitted to the state for review.

NATIONAL BABA WAIVERS – The EPA has issued the following national waivers: 1) Adjustment Period (September 2, 2022); 2) Small Project (September 26, 2022); 3) De Minimis (October 21, 2022).

1.3.11 Prohibition on Certain Telecommunications and Video Surveillance Services or Equipment

This term and condition implements 2 CFR 200.216 and is effective for obligations and expenditures of EPA financial assistance funding on or after 8/13/2020.

As required by 2 CFR 200.216, EPA recipients and subrecipients, including borrowers under EPA funded

revolving loan fund programs, are prohibited from obligating or expending loan or grant funds to procure or obtain; or enter into a contract (or extend or renew a contract) to procure or obtain equipment, services, or systems that use covered telecommunications equipment or services as a substantial or essential component of any system, or as critical technology as part of any system.

As described in Public Law 115-232, section 889, covered telecommunications equipment or services means any of the following:

a. Telecommunications equipment produced by Huawei Technologies Company or ZTE Corporation (or any subsidiary or affiliate of such entities).

b. For the purpose of public safety, security of government facilities, physical security surveillance of critical infrastructure, and other national security purposes, video surveillance and telecommunications equipment produced by Hytera Communications Corporation, Hangzhou Hikvision Digital Technology Company, or Dahua Technology Company (or any subsidiary or affiliate of such entities).

c. Telecommunications or video surveillance services provided by such entities or using such equipment.

d. Telecommunications or video surveillance equipment or services produced or provided by an entity that the Secretary of Defense, in consultation with the Director of the National Intelligence or the Director of the Federal Bureau of Investigation, reasonably believes to be an entity owned or controlled by, or otherwise connected to, the government of a covered foreign country.

Certain prohibited equipment, systems, or services, including equipment, systems, or services produced or provided by entities identified in section 889, are recorded in the System for Award Management exclusion list.

1.4 ADDITIONAL SPECIAL PROVISIONS FOR ARPA

If the project is funded solely by ARPA, the Buy America Build America in 1.3.10 of this agreement do not apply. The Federal Labor Standards Provisions (Davis-Bacon) do not apply to projects funded solely by ARPA.

1.5 EXHIBITS

EXHIBIT A-1 (Required for All Projects)

SRF Project Sign Detail

Project Title

BIOSOLIDS & GREEN WASTE COMPOSTING SYSTEM IMPROVEMENTS PROJECT

White Background

Black Lettering

OWNER: CITY OF MISSOULA

ENGINEER: ANDERSON-MONTGOMERY CONS. ENG.

CONTRACTOR

PROJECT FUNDING SOURCES & AMOUNTS:

- **State Revolving Fund (EPA/DEQ/DNRC) .....$**
- **American Rescue Plan Act (ARPA) .....$**

TOTAL PROJECT COST: $

4'

8'

- **PROVIDE TREATED REDWOOD 4X4 SUPPORTS FOR SIGN (BOTH ENDS) AND KEEP SIGN A PROPER DISTANCE ABOVE PREVAILING GRADE TO PERMIT VIEWING**
- **MUST NOT BE WITHIN ROAD RIGHT-OF-WAY**
- **EXTERIOR TYPE PLYWOOD SUITABLE FOR SIGN**

SRF PROJECT SIGN

EXHIBIT C (Required for SRF Projects)

Federal Labor Standards Provisions
For
Federally Assisted Construction Contracts
United States Department of Labor
CFR Code of Federal Regulations Pertaining to ESA
(Federal Davis-Bacon Wages)

Federal Labor Standards Provisions
For
Federally Assisted Construction Contracts
United States Department of Labor
CFR Code of Federal Regulations Pertaining to ESA
(Federal Davis-Bacon Wages)

Title 29, Chapter I, Part 5, Subpart A (29 CFR 5.5)

Section Name: Contract provisions and related matters.

(a) The Recipient shall assure that the subrecipient(s) shall insert in full in any contract in excess of $2,000 which is entered into for the actual construction, alteration or repair, including painting and decorating, of a treatment work under the CWSRF or a construction project under the DWSRF financed in whole or in part from Federal funds or in accordance with guarantees of a Federal agency or financed from funds obtained by pledge of any contract of a Federal agency to make a loan, grant or annual contribution (except where a different meaning is expressly indicated), and which is subject to the labor standards provisions of any of the acts listed in § 5.1 or the applicable FY appropriation requirements, the following clauses:

(1) Minimum wages. (i) All laborers and mechanics employed or working upon the site of the work (or under the United States Housing Act of 1937 or under the Housing Act of 1949 in the construction or development of the project), will be paid unconditionally and not less often than once a week, and without subsequent deduction or rebate on any account (except such payroll deductions as are permitted by regulations issued by the Secretary of Labor under the Copeland Act (29 CFR part 3)), the full amount of wages and bona fide fringe benefits (or cash equivalents thereof) due at time of payment computed at rates not less than those contained in the wage determination of the Secretary of Labor which is attached hereto and made a part hereof, regardless of any contractual relationship which may be alleged to exist between the contractor and such laborers and mechanics. Contributions made or costs reasonably anticipated for bona fide fringe benefits under section 1(b)(2) of the Davis-Bacon Act on behalf of laborers or mechanics are considered wages paid to such laborers or mechanics, subject to the provisions of paragraph (a)(1)(iv) of this section; also, regular contributions made or costs incurred for more than a weekly period (but not less often than quarterly) under plans, funds, or programs which cover the particular weekly period, are deemed to be constructively made or incurred during such weekly period. Such laborers and mechanics shall be paid the appropriate wage rate and fringe benefits on the wage determination for the classification of work actually performed, without regard to skill, except as provided in Sec. 5.5(a)(4). Laborers or mechanics performing work in more than one classification may be compensated at the rate specified for each classification for the time actually worked therein: Provided that the employer's payroll records accurately set forth the time spent in each classification in which work is performed. The wage determination (including any additional classification and wage rates conformed under paragraph (a)(1)(ii) of this section) and the Davis-Bacon poster (WH-1321) shall be posted at all times by the contractor and its subcontractors at the site of the work in a prominent and accessible place where it can be easily seen by the workers.

(ii)(A) The contracting officer shall require that any class of laborers or mechanics, including helpers, which is not listed in the wage determination and which is to be employed under the contract shall be classified in conformance with the wage determination. The contracting officer shall approve an additional classification and wage rate and fringe benefits therefore only when the following criteria have been met:
(1) The work to be performed by the classification requested is not performed by a classification in the wage determination; and
(2) The classification is utilized in the area by the construction industry; and
(3) The proposed wage rate, including any bona fide fringe benefits, bears a reasonable relationship to the wage rates contained in the wage determination.

(B) If the contractor and the laborers and mechanics to be employed in the classification (if known), or their representatives, and the contracting officer agree on the classification and wage rate (including the amount designated for fringe benefits where appropriate), a report of the action taken shall be sent by the

contracting officer to the Administrator of the W age and Hour Division, Employment Standards Administration, U.S. Department of Labor, Washington, DC 20210. The Administrator, or an authorized representative, will approve, modify, or disapprove every additional classification action within 30 days of receipt and so advise the contracting officer or will notify the contracting officer within the 30-day period that additional time is necessary.

(C) In the event the contractor, the laborers or mechanics to be employed in the classification or their representatives, and the contracting officer do not agree on the proposed classification and wage rate (including the amount designated for fringe benefits, where appropriate), the contracting officer shall refer the questions, including the views of all interested parties and the recommendation of the contracting officer, to the Administrator for determination. The Administrator, or an authorized representative, will issue a determination within 30 days of receipt and so advise the contracting officer or will notify the contracting officer within the 30-day period that additional time is necessary.

(D) The wage rate (including fringe benefits where appropriate) determined pursuant to paragraphs (a)(1)(ii) (B) or (C) of this section, shall be paid to all workers performing work in the classification under this contract from the first day on which work is performed in the classification.

(iii) Whenever the minimum wage rate prescribed in the contract for a class of laborers or mechanics includes a fringe benefit which is not expressed as an hourly rate, the contractor shall either pay the benefit as stated in the wage determination or shall pay another bona fide fringe benefit or an hourly cash equivalent thereof.

(iv) If the contractor does not make payments to a trustee or other third person, the contractor may consider as part of the wages of any laborer or mechanic the amount of any costs reasonably anticipated in providing bona fide fringe benefits under a plan or program, Provided, That the Secretary of Labor has found, upon the written request of the contractor, that the applicable standards of the Davis-Bacon Act have been met. The Secretary of Labor may require the contractor to set aside in a separate account assets for the meeting of obligations under the plan or program.

(2) Withholding. The loan or grant recipient shall upon its own action or upon written request of an authorized representative of the Department of Labor withhold or cause to be withheld from the contractor under this contract or any other Federal contract with the same prime contractor, or any other federally-assisted contract subject to Davis-Bacon prevailing wage requirements, which is held by the same prime contractor, so much of the accrued payments or advances as may be considered necessary to pay laborers and mechanics, including apprentices, trainees, and helpers, employed by the contractor or any subcontractor the full amount of wages required by the contract. In the event of failure to pay any laborer or mechanic, including any apprentice, trainee, or helper, employed or working on the site of the work (or under the United States Housing Act of 1937 or under the Housing Act of 1949 in the construction or development of the project), all or part of the wages required by the contract, the (Agency or SRF program) may, after written notice to the contractor, sponsor, applicant, or owner, take such action as may be necessary to cause the suspension of any further payment, advance, or guarantee of funds until such violations have ceased.

(3) Payrolls and basic records. (i) Payrolls and basic records relating thereto shall be maintained by the contractor during the course of the work and preserved for a period of three years thereafter for all laborers and mechanics working at the site of the work (or under the United States Housing Act of 1937, or under the Housing Act of 1949, in the construction or development of the project). Such records shall contain the name, address, and social security number of each such worker, his or her correct classification, hourly rates of wages paid (including rates of contributions or costs anticipated for bona fide fringe benefits or cash equivalents thereof of the types described in section 1(b)(2)(B) of the Davis-Bacon Act), daily and weekly number of hours worked, deductions made and actual wages paid. Whenever the Secretary of Labor has found under 29 CFR 5.5(a)(1)(iv) that the wages of any laborer or mechanic include the amount of any costs reasonably anticipated in providing benefits under a plan or program described in section 1(b)(2)(B) of the Davis-Bacon Act, the contractor shall maintain records which show that the commitment to provide such benefits is enforceable, that the plan or program is financially responsible, and that the plan or program has been communicated in writing to the laborers or mechanics affected, and records which show the costs anticipated or the actual cost incurred in providing such benefits. Contractors employing apprentices or trainees under approved programs shall maintain written evidence of the registration of apprenticeship programs and certification of trainee programs, the

registration of the apprentices and trainees, and the ratios and wage rates prescribed in the applicable programs.

(ii)(A) The contractor shall submit weekly for each week in which any contract work is performed a copy of all payrolls to the SRF program if the agency is a party to the contract, but if the agency is not such a party, the contractor will submit the payrolls to the applicant, sponsor, or owner, as the case may be, for transmission to the SRF program. The payrolls submitted shall set out accurately and completely all of the information required to be maintained under 29 CFR 5.5(a)(3)(i), except that full social security numbers and home addresses shall not be included on weekly transmittals. Instead the payrolls shall only need to include an individually identifying number for each employee (e.g., the last four digits of the employee's social security number). The required weekly payroll information may be submitted in any form desired. Optional Form WH-347 is available for this purpose from the Wage and Hour Division Web site at http://www.dol.gov/whd/forms/wh347instr.htm or its successor site. The prime contractor is responsible for the submission of copies of payrolls by all subcontractors. Contractors and subcontractors shall maintain the full social security number and current address of each covered worker, and shall provide them upon request to the SRF program if the agency is a party to the contract, but if the agency is not such a party, the contractor will submit them to the applicant, sponsor, or owner, as the case may be, for transmission to the SRF program, the contractor, or the Wage and Hour Division of the Department of Labor for purposes of an investigation or audit of compliance with prevailing wage requirements. It is not a violation of this section for a prime contractor to require a subcontractor to provide addresses and social security numbers to the prime contractor for its own records, without weekly submission to the sponsoring government agency (or the applicant, sponsor, or owner).

(B) Each payroll submitted shall be accompanied by a ``Statement of Compliance,'' signed by the contractor or subcontractor or his or her agent who pays or supervises the payment of the persons employed under the contract and shall certify the following:

(1) That the payroll for the payroll period contains the information required to be provided under Sec. 5.5 (a)(3)(ii) of Regulations, 29 CFR part 5, the appropriate information is being maintained under Sec. 5.5 (a)(3)(i) of Regulations, 29 CFR part 5, and that such information is correct and complete;

(2) That each laborer or mechanic (including each helper, apprentice, and trainee) employed on the contract during the payroll period has been paid the full weekly wages earned, without rebate, either directly or indirectly, and that no deductions have been made either directly or indirectly from the full wages earned, other than permissible deductions as set forth in Regulations, 29 CFR part 3;

(3) That each laborer or mechanic has been paid not less than the applicable wage rates and fringe benefits or cash equivalents for the classification of work performed, as specified in the applicable wage determination incorporated into the contract.

(C) The weekly submission of a properly executed certification set forth on the reverse side of Optional Form WH-347 shall satisfy the requirement for submission of the ``Statement of Compliance'' required by paragraph (a)(3)(ii)(B) of this section.

(D) The falsification of any of the above certifications may subject the contractor or subcontractor to civil or criminal prosecution under section 1001 of title 18 and section 231 of title 31 of the United States Code.

(iii) The contractor or subcontractor shall make the records required under paragraph (a)(3)(i) of this section available for inspection, copying, or transcription by authorized representatives of the loan or grant recipient or the Department of Labor, and shall permit such representatives to interview employees during working hours on the job. If the contractor or subcontractor fails to submit the required records or to make them available, the Federal agency may, after written notice to the contractor, sponsor, applicant, or owner, take such action as may be necessary to cause the suspension of any further payment, advance, or guarantee of funds. Furthermore, failure to submit the required records upon request or to make such records available may be grounds for debarment action pursuant to 29 CFR 5.12.

(4) Apprentices and trainees

(i) Apprentices. Apprentices will be permitted to work at less than the predetermined rate for the work they performed when they are employed pursuant to and individually registered in a bona fide apprenticeship program registered with the U.S. Department of Labor, Employment and Training Administration, Office of Apprenticeship Training, Employer and Labor Services, or with a State Apprenticeship Agency recognized by the Office, or if a person is employed in his or her first 90 days of probationary employment as an apprentice in such an apprenticeship program, who is not individually

registered in the program, but who has been certified by the Office of Apprenticeship Training, Employer and Labor Services or a State Apprenticeship Agency (where appropriate) to be eligible for probationary employment as an apprentice. The allowable ratio of apprentices to journeymen on the job site in any craft classification shall not be greater than the ratio permitted to the contractor as to the entire work force under the registered program. Any worker listed on a payroll at an apprentice wage rate, who is not registered or otherwise employed as stated above, shall be paid not less than the applicable wage rate on the wage determination for the classification of work actually performed. In addition, any apprentice performing work on the job site in excess of the ratio permitted under the registered program shall be paid not less than the applicable wage rate on the wage determination for the work actually performed. Where a contractor is performing construction on a project in a locality other than that in which its program is registered, the ratios and wage rates (expressed in percentages of the journeyman's hourly rate) specified in the contractor's or subcontractor's registered program shall be observed. Every apprentice must be paid at not less than the rate specified in the registered program for the apprentice's level of progress, expressed as a percentage of the journeymen hourly rate specified in the applicable wage determination. Apprentices shall be paid fringe benefits in accordance with the provisions of the apprenticeship program. If the apprenticeship program does not specify fringe benefits, apprentices must be paid the full amount of fringe benefits listed on the wage determination for the applicable classification. If the Administrator determines that a different practice prevails for the applicable apprentice classification, fringes shall be paid in accordance with that determination. In the event the Office of Apprenticeship Training, Employer and Labor Services, or a State Apprenticeship Agency recognized by the Office, withdraws approval of an apprenticeship program, the contractor will no longer be permitted to utilize apprentices at less than the applicable predetermined rate for the work performed until an acceptable program is approved.

(ii) Trainees. Except as provided in 29 CFR 5.16, trainees will not be permitted to work at less than the predetermined rate for the work performed unless they are employed pursuant to and individually registered in a program which has received prior approval, evidenced by formal certification by the U.S. Department of Labor, Employment and Training Administration. The ratio of trainees to journeymen on the job site shall not be greater than permitted under the plan approved by the Employment and Training Administration. Every trainee must be paid at not less than the rate specified in the approved program for the trainee's level of progress, expressed as a percentage of the journeyman hourly rate specified in the applicable wage determination. Trainees shall be paid fringe benefits in accordance with the provisions of the trainee program. If the trainee program does not mention fringe benefits, trainees shall be paid the full amount of fringe benefits listed on the wage determination unless the Administrator of the Wage and Hour Division determines that there is an apprenticeship program associated with the corresponding journeyman wage rate on the wage determination which provides for less than full fringe benefits for apprentices. Any employee listed on the payroll at a trainee rate who is not registered and participating in a training plan approved by the Employment and Training Administration shall be paid not less than the applicable wage rate on the wage determination for the classification of work actually performed. In addition, any trainee performing work on the job site in excess of the ratio permitted under the registered program shall be paid not less than the applicable wage rate on the wage determination for the work actually performed. In the event the Employment and Training Administration withdraws approval of a training program, the contractor will no longer be permitted to utilize trainees at less than the applicable predetermined rate for the work performed until an acceptable program is approved.

(iii) Equal employment opportunity. The utilization of apprentices, trainees and journeymen under this part shall be in conformity with the equal employment opportunity requirements of Executive Order 11246, as amended, and 29 CFR part 30.

(5) Compliance with Copeland Act requirements. The contractor shall comply with the requirements of 29 CFR part 3, which are incorporated by reference in this contract.

(6) Subcontracts. The contractor or subcontractor shall insert in any subcontracts the clauses contained in 29 CFR 5.5(a)(1) through (10) and such other clauses as the SRF program may by appropriate instructions require, and also a clause requiring the subcontractors to include these clauses in any lower tier subcontracts. The prime contractor shall be responsible for the compliance by any subcontractor or lower tier subcontractor with all the contract clauses in 29 CFR 5.5.

(7) Contract termination: Debarment. A breach of the contract clauses in 29 CFR 5.5 may be grounds for termination of the contract, and for debarment as a contractor and a subcontractor as provided in 29 CFR 5.12.

(8) Compliance with Davis-Bacon and Related Act requirements. All rulings and interpretations of the Davis-Bacon and Related Acts contained in 29 CFR parts 1, 3, and 5 are herein incorporated by reference in this contract.

(9) Disputes concerning labor standards. Disputes arising out of the labor standards provisions of this contract shall not be subject to the general disputes clause of this contract. Such disputes shall be resolved in accordance with the procedures of the Department of Labor set forth in 29 CFR parts 5, 6, and 7. Disputes within the meaning of this clause include disputes between the contractor (or any of its subcontractors) and the contracting agency, the U.S. Department of Labor, or the employees or their representatives.

(10) Certification of eligibility. (i) By entering into this contract, the contractor certifies that neither it (nor he or she) nor any person or firm who has an interest in the contractor's firm is a person or firm ineligible to be awarded Government contracts by virtue of section 3(a) of the Davis-Bacon Act or 29 CFR 5.12(a)(1).

(ii) No part of this contract shall be subcontracted to any person or firm ineligible for award of a Government contract by virtue of section 3(a) of the Davis-Bacon Act or 29 CFR 5.12(a)(1).

(iii) The penalty for making false statements is prescribed in the U.S. Criminal Code, 18 U.S.C. 1001.

(b) Contract Work Hours and Safety Standards Act. The Agency Head shall cause or require the contracting officer to insert the following clauses set forth in paragraphs (b)(1), (2), (3), and (4) of this section in full in any contract in an amount in excess of $100,000 and subject to the overtime provisions of the Contract Work Hours and Safety Standards Act. These clauses shall be inserted in addition to the clauses required by Sec. 5.5(a) or 4.6 of part 4 of this title. As used in this paragraph, the terms laborers and mechanics include watchmen and guards.

(1) Overtime requirements. No contractor or subcontractor contracting for any part of the contract work which may require or involve the employment of laborers or mechanics shall require or permit any such laborer or mechanic in any workweek in which he or she is employed on such work to work in excess of forty hours in such workweek unless such laborer or mechanic receives compensation at a rate not less than one and one-half times the basic rate of pay for all hours worked in excess of forty hours in such workweek.

(2) Violation; liability for unpaid wages; liquidated damages. In the event of any violation of the clause set forth in paragraph (b)(1) of this section the contractor and any subcontractor responsible therefore shall be liable for the unpaid wages. In addition, such contractor and subcontractor shall be liable to the United States (in the case of work done under contract for the District of Columbia or a territory, to such District or to such territory), for liquidated damages. Such liquidated damages shall be computed with respect to each individual laborer or mechanic, including watchmen and guards, employed in violation of the clause set forth in paragraph (b)(1) of this section, in the sum of $10 for each calendar day on which such individual was required or permitted to work in excess of the standard workweek of forty hours without payment of the overtime wages required by the clause set forth in paragraph (b)(1) of this section.

(3) Withholding for unpaid wages and liquidated damages. The loan or grant recipient shall upon its own action or upon written request of an authorized representative of the Department of Labor withhold or cause to be withheld, from any moneys payable on account of work performed by the contractor or subcontractor under any such contract or any other Federal contract with the same prime contractor, or any other federally-assisted contract subject to the Contract Work Hours and Safety Standards Act, which is held by the same prime contractor, such sums as may be determined to be necessary to satisfy any liabilities of such contractor or subcontractor for unpaid wages and liquidated damages as provided in the clause set forth in paragraph (b)(2) of this section.

(4) Subcontracts. The contractor or subcontractor shall insert in any subcontracts the clauses set forth in paragraph (b)(1) through (4) of this section and also a clause requiring the subcontractors to include these clauses in any lower tier subcontracts. The prime contractor shall be responsible for compliance by any subcontractor or lower tier subcontractor with the clauses set forth in paragraphs (b)(1) through (4) of this section.

(c) In addition to the clauses contained in paragraph (b), in any contract subject only to the Contract Work Hours and Safety Standards Act and not to any of the other statutes cited in Sec. 5.1, the Agency Head shall cause or require the contracting officer to insert a clause requiring that the contractor or subcontractor shall maintain payrolls and basic payroll records during the course of the work and shall preserve them for a period of three years from the completion of the contract for all laborers and mechanics, including guards and watchmen, working on the contract. Such records shall contain the name and address of each such employee, social security number, correct classifications, hourly rates of wages paid, daily and weekly number of hours worked, deductions made, and actual wages paid. Further, the Agency Head shall cause or require the contracting officer to insert in any such contract a clause providing that the records to be maintained under this paragraph shall be made available by the contractor or subcontractor for inspection, copying, or transcription by authorized representatives of the loan or grant recipient and the Department of Labor, and the contractor or subcontractor will permit such representatives to interview employees during working hours on the job.

https://www.ecfr.gov/cgi-bin/text-idx?c=ecfr&sid=99c9a20e960f56be66f17ae91b52c888&rgn=div5&view=text&node=29:1.1.1.1.6&idno=29

EXHIBIT D (Required for SRF Projects)

Reserved

EXHIBIT E

MT DEQ Build America, Buy America (BABA) Forms

CONTRACTOR CERTIFICATION

Build America, Buy America Act, 2021

USE OF IRON, STEEL, MANUFACTURED PRODUCTS, AND CONSTRUCTION MATERIALS

On November 15, 2021, the "Infrastructure Investment and Jobs Act," (Public Law 117-58), which includes the Build America, Buy America Act (Public Law 117-58, Title IX, Subtitles A and B, Sections 70901-70941) was enacted. This law applies to most programs that receive federal funds including the Clean Water State Revolving Fund and the Drinking Water State Revolving Fund programs.

Section 70914(a) of the Act states that none of the funds made available for a Federal financial assistance program for infrastructure may be obligated for a project unless all of the iron, steel, manufactured products, and construction materials used in the project are produced in the United States.

As the general contractor for the project(s) using revolving loan funds, the undersigned attests that they have performed the necessary oversight to ensure this provision was met on the project(s) being funded.

I, the undersigned authorized representative of_____, do hereby certify that all iron, steel, manufactured products, and construction materials used in the project(s) have complied with the above provision of the Build America, Buy America Act.

Project Name_____,

DEQ Loan Project Number_____,

Authorized Signature_____, Date_____,

Title_____,

Print Name _____

MANUFACTURER CERTIFICATION

Build America, Buy America Act, 2021

USE OF IRON, STEEL, MANUFACTURED PRODUCTS, AND CONSTRUCTION MATERIALS

On November 15, 2021, the "Infrastructure Investment and Jobs Act," (Public Law 117-58), which includes the Build America, Buy America Act (Public Law 117-58, Title IX, Subtitles A and B, Sections 70901-70941) was enacted. This law applies to most programs that receive federal funds including the Clean Water State Revolving Fund and the Drinking Water State Revolving Fund programs.

Section 70914(a) of the Act states that none of the funds made available for a Federal financial assistance program for infrastructure may be obligated for a project unless all of the iron, steel, manufactured products, and construction materials used in the project are produced in the United States.

This certification applies to the following specific iron products, steel products, manufactured products, or construction materials to be incorporated into this project:

Manufacturer Name:_____

Material/Product Description:_____

Location of factory where these products were/will be manufactured: _____

Product category (iron and steel, manufactured product, or construction material): _____

As a manufacturer for the project(s) using revolving loan funds, the undersigned attests that they have performed the necessary oversight to ensure this provision was met on the project(s) being funded.

I, the undersigned authorized representative of_____, do hereby certify that all iron, steel, manufactured products, and construction materials used in the project(s) have complied with the above provision of the Build America, Buy America Act including the 55% manufactured product component cost test.

Project Name_____,

DEQ Loan Project Number_____,

Authorized Signature_____, Date_____,

Title_____,

Print Name_____.

CERTIFICATE OF OWNER'S ATTORNEY AND AGENCY CONCURRENCE

Notes to User: This exhibit consists of two certificates, on a single page, to be attached to the Contract and signed upon execution. The first is a certificate to be signed by the Owner's attorney and the second is the concurrence to be signed by the State Engineer. This page is to be inserted after the Agreement between Owner and Contractor for Construction Contract (Stipulated Price) (EJCDC C-520, 2018) in the Construction Contract Documents.

CERTFICATE OF OWNER'S ATTORNEY

_____

PROJECT NAME:

_____

CONTRACTOR NAME AND CONTRACT NUMBER:

I, the undersigned,_____, the duly authorized and acting legal representative of , do hereby certify as follows: I have examined the attached Contract(s) and performance and payment bond(s) and the manner of execution thereof, and I am of the opinion that each of the aforesaid agreements is adequate and has been duly executed by the proper parties thereto acting through their duly authorized representatives; that said representatives have full power and authority to execute said agreements on behalf of the respective parties named thereon; and that the foregoing agreements constitute valid and legally binding obligations upon the parties executing the same in accordance with the terms, conditions, and provisions thereof.

Name Date

AGENCY CONCURRENCE

As lender or insurer of funds to defray the costs of this Contract, and without liability for any payments thereunder, the Agency hereby concurs in the form, content, and execution of this Agreement.

Agency Representative Date

Name

DOMESTIC PREFERENCE *DE MINIMIS* LIST FORMAT

Notes to User: This exhibit is an example format for Contractors to use in maintaining a list of items to document the use of the De Minimis waiver of the Domestic Preference requirements. This list or similar is required to be filled out throughout the construction Contract as needed. The State Engineer may periodically ask to review this information. At the Contract completion, this list, along with all Manufacturers' certifications, are to be given to the Engineer for delivery to the Owner. This list is applicable for projects governed by BABAA. USDA-RD State Office can provide guidance if AIS applies to the project instead.

DE MINIMIS COSTING WORKSHEET

Project Name: _____

Contract Name/# (if more than one) _____

Contractor (Company Name): _____

Representative: _____

Date: _____

Total Project Costs : $ _____

Allowable Total *De Minimis* Costs (5% of project costs) $ _____

Total Cost of all *De Minimis* Items $ _____

Remaining Amount Allowed for Future *De Minimis* Items $ _____

No.	Detailed Description and Manufacturer or Local Source of *De Minimis* Material	Quantity	Cost Per Item	Total Item Cost
1				
2				
3				
4				
5				
6				
7				
8				
9				
10				
11				
12				

SAMPLE LANGUAGE FOR CONTRACTOR'S
CERTIFICATION OF COMPLIANCE

Notes to User: This exhibit provides sample language that the Contractor can use to certify compliance with the Build America Buy America Act requirements. Note that the language can be modified (for example if the project is subject to AIS the BABAA reference should be replaced with language such as "American Iron and Steel (AIS) requirements mandated by Section 746 of Title VII of the Consolidated Appropriations Act of 2017 and subsequent annual appropriations for WWD programs"). A certification is to be provided by Contractor to Engineer for delivery to the Owner and Agency at Substantial Completion. The certification should be on letterhead and should be signed and dated by an authorized company representative.

GENERAL (PRIME) CONTRACTOR'S CERTIFICATION OF COMPLIANCE WITH PROVISIONS OF THE AMERICAN IRON AND STEEL REQUIREMENTS OF SECTION 746 OF TITLE VII OF THE CONSOLIDATED APPROPRIATIONS ACT OF 2017 (DIVISION A - AGRICULTURE, RURAL DEVELOPMENT, FOOD AND DRUG ADMINISTRATION, AND RELATED AGENCIES APPROPRIATIONS ACT, 2017) AND SUBSEQUENT STATUTES MANDATING DOMESTIC PREFERENCE

Project Name
Owner / Applicant
Contract Number

I hereby certify, that to the best of my knowledge and belief, all Iron and Steel products, Manufactured Products, and Construction Materials installed for this project by my company and by any and all subcontractors and Manufacturers my company has contracted with for this project comply with the Build America, Buy America Act (BABAA) requirements under Title IX of the Infrastructure Investment and Jobs Act (IIJA), Pub. L. 117-58, §§ 70901-70953 or are the subject of a waiver approved by the Secretary of Agriculture or designee.

SAMPLE LANGUAGE FOR MANUFACTURER'S CERTIFICATION OF COMPLIANCE

Notes to User: This exhibit provides sample language for the Manufacturer's Certification of Compliance with Domestic Preference requirements. Contractor should ensure that Engineer has an approved Manufacturers' Certification prior to any domestic preference item being delivered to the project site. The Manufacturer's Certification should be on letterhead and should indicate the project, specific item being certified, reference which domestic preference requirement is being certified and be signed by an authorized company representative. The Manufacturer's Certification may include multiple domestic preference requirements. It is important for the governing domestic preference requirement (whether AIS, BABAA or other) to be clearly included within the certification.

Date:

Company Name:

Company Address:

Subject: Domestic Preference Requirement Certification for {*Owner's Name* and *Project Name (City, State)}* Certification for Project (X), Owner's Name, and Contract Number

Sample text:

I hereby certify that the following product(s) and / or material(s) shipped or provided for the subject project are in full compliance with the Build America, Buy America Act (BABAA) requirements under Title IX of the Infrastructure Investment and Jobs Act (IIJA), Pub. L. 117-58, §§ 70901-70953.

[List common name of items, products and/or materials]

ENGINEER'S CERTIFICATIONS

Notes to User: This exhibit provides sample language for the statements needed for the Engineer of Record's certification; it should be submitted with the bid package to the Agency for concurrence for authorization to bid by Agency. This certification is not intended to be a warranty in any way but rather the designer's professional opinion that to the best of their knowledge the documents comply. This certification does not need to be included in the contract documents. Note that the language can be modified (for example if the project is subject to AIS, the BABAA reference should be replaced with language such as "American Iron and Steel (AIS) requirements mandated by Section 746 of Title VII of the Consolidated Appropriations Act of 2017 and subsequent annual appropriations for WWD programs.").

The final Drawings and Specifications, construction Contract Documents, Bidding Documents, procurement documents, and any other final design phase deliverables, comply with all applicable federal requirements including the Build America, Buy America Act (BABAA) requirements under Title IX of the Infrastructure Investment and Jobs Act (IIJA), Pub. L. 117-58, §§ 70901-70953, or are the subject of a waiver approved by the Secretary of Agriculture or designee. This includes the following:

- The Engineers Joint Contract Documents Committee (EJCDC) documents have been used, and all acceptable revisions identified in this Bulletin have been made in accordance with the terms of the license agreement, which states in part that the Engineer "will plainly show all changes to the standard EJCDC text, using 'Track Changes' (redline/strikeout), highlighting, or other means of clearly indicating additions and deletions." Such other means may include attachments indicating changes (e.g. Supplementary Conditions modifying the General Conditions).

- Any building(s) designed for this Project will comply with the requirements of the Architectural Barriers Act (ABA) of 1968, the Americans with Disabilities Act (ADA) of 1990, Section 504 of the Rehabilitation Act of 1973, and any federal, state, or local accessibility standards.

- Any building(s) designed for this Project will comply with the Seismic Safety of Federally Assisted New Building Construction requirements of 7 CFR 1792, and any federal, state, or local standards.

- All referenced Products and Construction Materials in the Drawings, Specifications, and Bidding Documents for the Project comply with BABAA.

- All referenced Products and Construction Materials to be referenced in the Addenda, executed Contracts, and Change Orders will comply with BABAA.

Engineer Signature | Date

Engineer Name and Title | Engineering Company Name

SECTION 00 95 10
SPECIAL PROVISIONS

Contents:

1. Project Description
2. Site Inspection and Pre-bid Conference
3. Contract Time, Construction Phasing & Liquidated Damages
4. Project Related Contacts
5. General Construction Requirements
6. Soils Information
7. Engineering, Inspections, and Testing
8. Payments to Contractor
9. Utilities
10. Stored Materials
11. Notices
12. Drawings
13. Fees and Permits
14. Supervisor, Telephone and Project Site Facilities
15. Construction Water
16. Disposal of Used Water
17. Water Pollution, Erosion and Sediment Control
18. Materials Salvage
19. Protection of Adjacent Improvements
20. Construction Surveys
21. Site Dewatering
22. Sub-Excavation and Stabilization
23. Imported Backfill
24. Time of Open Trenches
25. Continuous Operation of Existing Facility
26. Plan of Operation
27. Construction Schedule
28. Tracer Tape
29. Security
30. Cleanup
31. Dust Control
32. Brush and Tree Removal
33. Wage Rates
34. Contractor Experience and Performance Requirements
35. Prequalifying Equipment & Materials
36. Traffic Control
37. Verification of Invert Elevations
38. Petroleum Contaminated Soils
39. Time Extension Or Shutdown For Weather
40. Standard Specifications
41. Geogrid and Geotextile
42. Project Sign
43. Warranty
44. Hierarchy Of Specification
45. Scheduling of Equipment Installation
46. Performance Testing & Facility Startup

1. PROJECT DESCRIPTION

The project will be constructed as one Base Schedule and Alternate Schedule(s). Work shall generally include:

- Excavation/stockpiling of unsuitable material;
- imported engineered fill;
- flat & vertical concrete;
- runoff collection system, lift station, forcemain;
- compost blowers (12);
- biofilter blowers (2);
- curing blower (1)
- aeration piping/fittings/dampers
- HDPE & stainless steel aeration piping, fittings, dampers;
- condensate collection & lift station;
- Conex control building & HVAC;
- groundwater well & irrigation system;
- site electrical;
- automated control system w/ sensing devices, communications, PLC, VFD's, panels;

2. SITE INSPECTION AND PRE-BID CONFERENCE

All Bidders should satisfy themselves as to the construction conditions by personal examination of the site described in this document. Bidders are encouraged to make any investigation necessary to assess the nature of the construction and the difficulties to be encountered. A mandatory pre-bid conference will be held, commencing at 1:00 P.M. at the Garden City Compost Facility, 1125 Clark Fork Lane, Missoula, MT on Thursday, March 6, 2025. All bidders are required to at least one Bidder representative attend the pre-bid in person to be considered responsible for bidding purposes. The Pre-Bid can be accessed virtually via Teams at the following link:

Meeting ID: 935 439 337 950 8 Passcode: 5rL2Mf

3. CONTRACT TIME, CONSTRUCTION PHASING & LIQUIDATED DAMAGES

Time is of the essence on this project and schedules must be adhered to. The following tentative schedule of events will be followed, to the extent possible:

a.	Initial Advertisement for Bids	February 19, 2025
b.	Pre-Bid Conference 1:00 P.M.	March 6, 2025
c.	Bid Opening 2:00 P.M.	March 14, 2025
d.	Notice of Tentative Award	April 17, 2025
e.	Pre-Construction Conference	May 1, 2025
f.	Notice to Proceed	May 19, 2025
g.	Substantial Completion	245 calendar days after NTP (Jan.17, 2026)
h.	Plant Startup	90 days after Substantial Completion

The Total Contract Time for this Project will be **245 consecutive** calendar days, as stated in the Agreement. Subject to the provisions of the Contract Documents, the OWNER shall be entitled to reimbursement for Contractor caused expenses incurred by the OWNER for unscheduled employment of the Engineer. Liquidated damages for the unscheduled

employment of the Engineer and/or Inspector will be assessed against the Contractor necessitated by the following:

- The Contractor working beyond the specified contract time.
- The Contractor working more than 8 hours per day, (or 40 hours per week if four ten hour shifts are worked) or on Saturdays, Sundays and Federal Holidays.
- The Contractor utilizing material, supplies, or equipment that requires the redesign of the project.
- The Contractor destroying or disturbing baselines, benchmarks or reference stakes.
- The failure of the Contractor to maintain acceptable as-built records.
- Retests by the Engineer of tests that have failed.
- Retests by others for tests that require Engineer's presence.
- Repeated review of submittals and shop drawings that have not been approved.
- Additional inspection as a result of unacceptable work.
- Failing to follow design or construction documents.
- Submitting excessive or unreasonable claims requiring Engineer's review.
- Failing to properly document pay requests.

Liquidated damages for the unscheduled employment of the Engineer and/or Inspector shall be determined based on the following hourly rates up to the daily limits identified in the Agreement:

Project Manager	$200.00/Hour
Project Engineer	$180.00/Hour
Inspector	$125.00/Hour
Mileage	$ 0.70/Mile

Out of pocket expenses for materials, equipment, supplies, transportation, and subsistence shall be billed at cost plus ten percent. Liquidated damages for unscheduled employment of the Engineer and/or Inspector shall be deducted from monthly progress payments and the final payment as the damages are incurred.

The Contractor shall reimburse the OWNER for all costs incurred as a result of the Contractor's failure to complete the work within the time period specified in the Contract unless modified by a Change in Contract Time. The OWNER shall have one or more representatives observing the work at all times work is taking place. The Contractor shall reimburse the OWNER for the cost of engineers, architects, attorneys, construction field representatives, and other professionals that are incurred due to the Contractor's failure to complete the work within the Contract time period.

4. PROJECT RELATED CONTACTS

OWNER: City of Missoula
Missoula City Hall
435 Ryman St.
Missoula, MT 59802
Logan McInnis, P.E., Deputy Director of Utilities
Telephone: (406) 552-6766

Engineer: Anderson-Montgomery Cons. Eng., Inc.
1064 N. Warren Street
Helena, Montana, 59601
Contact: Paul Montgomery, P.E.
Telephone: 406-449-3303
Cell: 406-459-8463
FAX: 406-449-3304

Field Representative: Kelby Dyc
(719) 839-9272
Anderson-Montgomery Cons. Eng., Inc.
1064 N. Warren St.
Helena, MT 59601

Utilities:
NorthWestern Energy – Distribution Gas Mains
Eric J Smith, District Engineer
Telephone: (406) 751-2219, (406) 871-2570 (cell)

Spectrum Communications
1-800-892-4357

Northwestern Energy
Shawn Medlin – Construction Engineer
Telephone: 888-467-2669

One Call Locators
Telephone: 811 or (406) 424-5555

5. GENERAL CONSTRUCTION REQUIREMENTS

Construction Limits. Work will occur within the confines of Missoula's Garden City Compost plant site and will not affect private land. Where construction limits, or property lines, are not specifically called out on the Drawings, the limit shall be the closest adjacent property line or easement line, whichever is less.

Areas of Disturbances. Approved areas of disturbance are those areas disturbed by construction activities within the construction limits and along designated or approved access routes. Such areas shall require reclamation and revegetation operations, including grading to the original contours, top soiling with salvaged or imported topsoil, seeding, fertilizing, and mulching as specified herein. Other areas that are disturbed by the Contractor's activities outside of the limits noted above will be considered as site damage or unapproved areas of disturbance subject to Repair and Replacement Quality as specified in the Supplementary Conditions. This includes areas selected by the Contractor outside the defined construction limits for mobilization, offices, equipment, or material storage.

6. SOILS INFORMATION

Geotechnical investigation work has been done for this Project. **Appendix C** of the contract documents contains the 2017 and 2024 *Garden City Compost Geotechnical Report(s)* by Pioneer Technical Services. The soil investigations represent only the site conditions at each borehole and CPT site at the time the investigations were conducted and should not be considered as a warranty that the conditions exist throughout the site. This data is provided strictly for informational purposes in an effort to provide the contractor with all available information. There is no guarantee that the soil and groundwater conditions portrayed in the study are descriptive of conditions within the general construction area or for any particular time of the year. The Bidder/Contractor is encouraged to conduct its own geotechnical studies in order to derive the necessary information upon which to base its bid and determine means and methods for construction.

7. ENGINEERING, INSPECTIONS, AND TESTING

The Contractor's work will be periodically tested and observed to ensure compliance with the Contract Documents. Complete payment will not be made until the Contractor has demonstrated that the work is complete and has been performed as required. If the Engineer detects a discrepancy between the work and the requirements of the Contract Documents at any time, up to and including final inspection, such work will not be completely paid for until the Contractor has corrected the deficiency.

The Engineer will periodically monitor the construction of work to determine if the work is being performed in accordance with the contract requirements. The Engineer does not have the authority or means to control the Contractor's methods of construction. It is, therefore, the Contractor's responsibility to utilize all methods, equipment, manpower, and other means necessary to assure that the work is installed in compliance with the Drawings and Specifications, and laws and regulations applicable to the work. Any discrepancies noted shall be brought to the Contractor's attention, who shall immediately correct the discrepancy. Failure of the Engineer to detect a discrepancy will not relieve the Contractor of his ultimate responsibility to perform the work as required.

The Contractor shall inspect the work as it is being performed. Any deviation from the Contract requirements shall be immediately corrected. Prior to any scheduled observation by the Engineer, the Contractor shall again inspect the work and certify to the Engineer that he has inspected the work and it meets the requirements of the Contract Documents. **All buried work items shall be inspected by the Engineer prior to backfilling, or may not be considered for payment**.

The work will be subject to review by the OWNER, whose findings shall be as valid as those of the Engineer. The results of all such observations shall be directed to the Contractor through the Engineer.

Services Provided by the Contractor. The Contractor shall provide the following services:

- Any field surveys to establish locations, elevations, grades and alignments as stipulated on the Plans.

- Preparation and certification of all required shop drawings and submittals as described in the Supplementary Conditions.
- Tests as required by the Contract Documents which include, but are not limited to, proctors and concrete strength laboratory tests. All tests requiring the services of a laboratory to determine compliance with the Contract Documents shall be performed by an independent commercial testing laboratory acceptable to the Engineer. The laboratory shall be staffed with experienced technicians properly equipped, and fully qualified to perform the tests in accordance with the specified standards.
- The Contractor shall provide an independent laboratory for any tests necessary to determine the compliance of the materials used in the asphalt mix with the Contract Documents.
- Maintenance of project record drawings.
- The Contractor shall arrange for and pay for all tests required by the Contract Documents.
- The Contractor shall provide an independent laboratory to check compaction of subgrade, backfill and base/subbase course using Proctor information supplied by the Contractor. These tests are only to determine if the material is complying with the Contract Documents. It is the responsibility of the Contractor to ensure that this level of compaction is constant in all locations. Compaction testing shall test moisture content and compaction as specified in the Contract Documents. Tests shall be taken upon every specified lift for both trenches and roadways/sidewalks at a maximum spacing of 100 feet along the trench or roadway/sidewalk alignment, or as directed by the Engineer.
- The Contractor shall provide an independent laboratory to determine cast-in-place concrete characteristics including: slump; air content and to cast and test cylinders for strength analysis as specified in the Contract Documents. The Contractor is responsible for proper onsite storage, transportation and laboratory strength testing of the cylinders. All on-site concrete testing shall be performed by a certified ACI technician.
- The Contractor shall provide an independent laboratory to perform, at minimum but not limited to, one (1) set of three (3) Marshall "pucks" to establish a jobspecific target density for the bituminous mix (if utilized). For each days' production, or for each 1,000 tons produced per day, the engineer will mark three random locations upon the mat for the removal of a 4" diameter core to be cut for density determination. A "percent compaction" value will be determined by comparing the average core density values for that day with the job specific target density previously determined by the Marshall "pucks". The independent laboratory will be required to document the thickness of asphalt material pulled from each core and to further trim each core prior to density testing. Documentation of test results shall be submitted to the engineer as they become available throughout construction activity.
- Contractor shall provide for disinfection and bacteriological testing of all newly installed water mains. Testing shall include chlorine residual testing as well as coliform testing for completed water mains utilized as a source of potable water.
- The contractor shall perform performance tests for any newly installed equipment as specified within these contract documents.

<u>Testing Services Provided by the OWNER</u>. The OWNER is not required to perform any testing services during the construction of this project. All required testing shall be the responsibility of the Contractor. The Contractor shall provide an approved independent

testing laboratory to perform all necessary testing during construction activities.

The Engineer will observe and record the results of Contractor field tests for unit process performance and pressure and leakage of water, sanitary sewers, manholes, tanks, calibration of equipment and related materials tests. Contractor shall coordinate tests with Engineer and provide all necessary equipment and labor to perform the required tests.

The Engineer will observe and review the results of Contractor's disinfection efforts, as well as bacteriological testing of the water mains. Contractor shall coordinate tests with its contract laboratory as well as the Engineer and provide all necessary equipment and labor to perform the required tests. Contractor shall pay for all initial and repeat (if necessary) bacteriological samples.

8. PAYMENTS TO CONTRACTOR

8.1 Scope. This section supersedes the sections of the General Conditions pertaining to payments to the Contractor, to be in compliance with MCA 28-2-2103 as amended on October 1, 2003. If an alternate billing, approval, and/or payment cycle is required for this project those provisions are discussed in the "Instructions to Bidders" section of these Contract Documents, and shall supersede this section on Payments to the Contractor.

8.2 Application for Partial and Final Payment. The Contractor shall prepare and submit an approvable Application for Payment on a monthly billing cycle, including Schedule of Value to support the request for payment. At the Preconstruction Conference it will be agreed upon which day of the month this application should be submitted so that it coincides with the OWNER's billing approval and payment schedule. After the first partial payment request is submitted the Contractor shall submit their subsequent applications on the same date each month for the duration of the project.

a. After the Contractor submits their Application for Payment the OWNER will have twenty one (21) days to review and approve payment for the entire amount of the request, or the undisputed portion of the request. During this same time period the Engineer will review the payment request and make recommendations to the OWNER on the items which the Engineer feels are approved for payment, and which items are in dispute. Items which are in dispute will be documented in writing and provided to the Contractor for correction and resubmission on subsequent payment requests. The undisputed portion will be approved for payment, and will be paid within seven (7) calendar days after approval. Five percent (5%) of all partial payments will be withheld from payment until the completion of the project as discussed below.
b. The Final Application for Payment, including release of the five percent (5%) retainage, may only be submitted after the Engineer has signed the Certificate of Substantial Completion and all punch list items have been addressed.
c. The Contractor will complete the City of Missoula Payment Request with each Application for Payment.

9. UTILITIES

The exact locations of existing underground utilities that may conflict with the work are not precisely known. It shall be the Contractor's responsibility to contact the OWNERs of the respective utilities and arrange for field location services.

9.1 Notification. The Contractor shall contact, in writing, all public and private utility companies that may have utilities that may be encountered during excavation. The notification shall include the following information:

- The nature of the work that the Contractor will be performing.
- The time, date and location that the Contractor will be performing work that may conflict with the utility.
- The nature of work that the utility will be required to perform such as moving a power pole, supporting a pole or underground cable, etc.
- Requests for field location and identification of utilities.
- A copy of the letter of notification shall be provided to the Engineer. During the course of construction, the Contractor shall keep the utility companies notified of any change in schedule or nature of work that differs from the original notification.

9.2 Identification. All utilities that may conflict with the work shall be the Contractor's responsibility to locate before any excavation is performed. Field markings provided by the utilities shall be preserved by the Contractor until actual excavation commences. All utility locations on the Drawings should be considered approximate and should be verified in the field by the Contractor. The Contractor shall also be responsible for locating all utilities that are not located on the Drawings.

9.3 Public Utilities. Water, sewer, storm drainage, electric, gas and other utilities owned and operated by the public entities shall, unless otherwise specifically requested by the utility OWNER, be removed, relocated, supported or adjusted as required by the Contractor at the Contractor's expense. All such work shall be in accordance with these Specifications, or the OWNER's Standard Specifications or written instructions when the work involved is not covered by these Specifications.

9.4 Other Utilities. Utilities owned and operated by private individuals, railroads, school districts, associations, or other entities not covered in these Special Provisions shall, unless otherwise specifically requested by the utility OWNER, be removed, relocated, supported or adjusted as required by the Contractor at the Contractor's expense. All work shall be in accordance with the utility OWNER's directions, or by methods recognized as being the standard of the industry when directions are not given by the OWNER of the utility.

9.5 Damage to Utilities and Private Property. The Contractor shall protect all utilities and private property and shall be solely responsible for any damage resulting from his construction activities. The Contractor shall hold the OWNER and Engineer harmless from all actions resulting from his failure to properly protect utilities and private property. All damage to utilities shall be repaired at the Contractor's expense to the full satisfaction of the OWNER of the damaged utility or property. The Contractor shall provide the OWNER with a letter from the OWNER of the damaged utility or property stating that it has been repaired

to the utility OWNER's full satisfaction.

9.6 Water Mains and Services. All water mains and services exposed during construction shall be adequately supported and protected from freezing at all times. Sections of water mains shall not be valved off without first giving the OWNER sufficient notification and receiving authorization from the Engineer. Unless otherwise permitted in writing by the OWNER, water mains and services shall not be shut off for more than 4 hours. All recipients of water service shall be notified in advance of any interruption of service.

Whenever a water main or service is damaged as a result of the Contractor's operations, the Contractor shall take immediate steps to repair the damage and disinfect all water mains and services contaminated as a result of the damage.

Existing water services from the mains to private property which interferes with trenching operations may be cut and replaced at the Contractor's option and expense provided the requirements for notification, length of interruption, and disinfection specified above are adhered to.

9.7 Maintenance of Flows. Adequate provisions shall be made for maintaining the flow of sewers, drains, and watercourses encountered during construction. Culverts, ditches, fences, crosswalks, and structures which are disturbed by this construction shall be satisfactorily restored to their original condition upon completion of the work. No additional payment shall be made for this work. All costs shall be merged with related bid items.

9.8 Structures. The Contractor shall exercise every precaution to prevent damage to existing buildings or structures in the vicinity of his work. In the event of such damages, he shall repair them to the satisfaction of the OWNER of the damaged structure at no cost to the OWNER.

9.9 Overhead Utilities. The Contractor shall use extreme caution to avoid a conflict, contact, or damage to overhead utilities, such as power lines, streetlights, telephone lines, television lines, poles, or other appurtenances during the course of construction of this project.

9.10 Buried Gas Lines. The Contractor shall provide some means of overhead support for buried gas lines exposed during trenching to prevent rupture in case of trench caving.

9.11 Pavement Removal. Where trench excavation or structure excavation requires the removal of curb and gutter, concrete sidewalks, or asphaltic or concrete pavement, the pavement or concrete shall be cut in a straight line parallel to the edge of the excavation by use of a spade-bitted air hammer, concrete saw, colter wheel, or similar approved equipment to obtain a straight, square clean break. Pavement cuts shall be 2 feet wider than the actual trench opening.

9.12 Survey Markers and Monuments. The Contractor shall use every care and precaution to protect and not disturb any survey marker or monuments, such as those that might be located at lot or block corners, property pins, intersection of street monuments or addition line demarcation. Such protection shall include markings with flagged high lath and close supervision. No monuments shall be disturbed without prior approval of the Engineer. Any survey marker or monument disturbed by the Contractor during the construction of the project

shall be replaced at no cost to the OWNER by a licensed land surveyor.

9.13 Temporary Utilities. The Contractor shall provide all temporary electrical, lighting, telephone, heating, cooling, ventilating, water, sanitary, fire protection, and other utilities and services necessary for the performance of the work. All fees, charges, and other costs associated therewith shall be paid for by the Contractor. Limited electrical service may be available from the wastewater plant for the Contractor's utilization.

10. STORED MATERIALS

Contractor shall use an approved storage area for materials and offices which should be available on site. Materials and/or equipment purchased by the Contractor may be paid for on a monthly basis providing invoices for said materials and equipment are presented to the Engineer, such materials have been approved through the submittal process and are adequately stored, protected and insured. ***The OWNER may provide an equipment/materials laydown yard immediately north of the project site upon negotiation.***

11. NOTICES

It will be the responsibility of the Contractor to notify the following individuals for the following items:

- OWNER and emergency services of service outages in writing a minimum of 24 hours in advance.
- Contractor to place "NO PARKING" signs as needed to ensure vehicles are not in the way of construction progress.
- Notify all affected parties of water, sewer, or electrical outages in writing 24 hours in advance.
- Notify OWNER and Engineer when any existing unit treatment processes are to be taken out of service, at least 48 hours in advance.
- Notify OWNER, Engineer, and all landOWNERs, 72 hours in advance, of when paving operations will occur.
- The Contractor shall maintain "ONE WAY" traffic through worksite at all times and provide reasonable access to the treatment plant facilities as required by the operational staff to perform necessary operation and maintenance.

12. DRAWINGS

The Engineer has located, to the best of his knowledge, all major objects that may influence construction and has indicated them on the Drawings for bidding purposes only. Because of scale, possible additions, subsurface uncertainties, etc., the Contractor shall be responsible for verifying in the field the exact locations of objects that may influence his construction operations. The Engineer and OWNER shall in no way be held responsible for objects not located exactly as shown on the Drawings or for objects installed subsequent to preparation of the Drawings.

13. FEES AND PERMITS

The OWNER and Engineer shall obtain (if necessary) the following permits at no expense to the Contractor. The Contractor shall be required to carry out all provisions of these permits as part of this Contract:

- Local Conservation District 310 Permit
- MDEQ 318 Authorization
- U.S. Army Corps of Engineers – 404 Permit: The City of Missoula will make application for a 404 Permit to the ACOE, after the outfall corridor and effluent diffuser site have been assessed for the presence of delineated wetlands. If required, the Contractor shall be responsible for compliance with all provisions of that permit.

The Contractor will be responsible for obtaining and paying for all other permits required by Local, State or Federal jurisdictions. Specifically, the Contractor shall obtain the following types of permits or provide documentation that they are not applicable:

- Stormwater Discharge Associated with Construction Permit* – Montana DEQ
- Ground Water Discharge Associated with Construction Permit – Montana DEQ
- Building, Electrical and Mechanical Permits – Building Codes Bureau, Montana Department of Commerce
- Electrical Permit
- ***Missoula City Building Permit for the Conex Control building – permit can be applied for online at:***
  https://www.ci.missoula.mt.us/2942/Permit-Processes-and-Policies

**** - It is imperative that the CONTRACTOR: secure coverage under the MDEQ's General Permit MTR100000; prepare a stand-alone Storm Water Pollution Prevention Plan (SWPPP) and implement the necessary controls and measures for this specific project. CONTRACTOR cannot rely on or operate under the City's SWPPP for the permitted compost facility.***

14. SUPERVISOR, TELEPHONE AND PROJECT SITE FACILITIES

At all times during construction the Contractor shall provide a telephone at the project site. In addition, if the phone is not manned, a system must be utilized to deliver messages to the project superintendent within 15 minutes of a phone call. The superintendent in charge of all operations must be on-site during all construction activities. The superintendent in charge of all operations must be qualified to do such work **and** shall be the same person throughout the project. Substitutions for superintendents can be made with the OWNER and Engineers approval. The City reserves the right to stop construction if the Contractor's Project Superintendent is absent from the site during construction activity. Additional Contract Time will not be allowed due to such stop work orders.

The Contractor shall maintain a suitable office at the site which shall serve as headquarters for his superintendent. All communications, drawings, instructions, and other articles will be delivered to the Contractor's field office or to the Contractor's main office as appropriate. Communications delivered to either location shall be deemed to have been delivered to the Contractor. The Contractor shall maintain copies of record drawings, specifications, shop

drawings, submittals, and all communications pertinent to the performance of the work at the field office and available for use at all times.

On-site toilet facilities for employees of Contractor and Subcontractors shall be provided and maintained in a sanitary condition. A bulletin board will be maintained on the jobsite for posting wage rates, labor standards and other information to be made available to the contractors employees.

15. CONSTRUCTION WATER

Water for temporary service, water quality tests, leakage tests, storm drain cleaning, and for compaction efforts may be obtained from the City through its hydrant located onsite. Contractor shall coordinate with the City to obtain water and shall install and utilize a City-supplied backflow preventer and meter. The meter shall be utilized to track water usage by the Contractor. ***The Contractor will not be billed for the reasonable use of City water which will only be utilized for construction activities related specifically to the Missoula Garden City Compost Plant Improvements Project.***

16. DISPOSAL OF USED WATER

Disposal of used water shall be the responsibility of the Contractor. Discharges to the surface are subject to permit and regulatory requirements. Discharge of chlorinated water is the responsibility of the Contractor. Discharge to sewer or storm drains must be coordinated with and approved in advance by the OWNER. It will be the responsibility of the Contractor to arrange for legal disposal of all groundwater (contaminated or otherwise) during execution of the Work.

17. WATER POLLUTION, EROSION AND SEDIMENT CONTROL

The Contractor shall obtain all required permits and comply with all laws and regulations of the Montana Department of Environmental Quality and with all other federal, state, and local laws and regulations controlling pollution to the environment. The contractor shall apply for these permits as soon as possible after the contract is awarded. The Contractor shall take necessary precautions to prevent pollution of streams, lakes, ponds, and reservoirs with fuels, oils, bitumens, chemicals, or other harmful materials and to prevent pollution of the atmosphere from particulate and gaseous matter.

Particular care will be required to prevent trench spoils from entering streams or watercourses. Similar care shall be used if removal is required for spoils already in the stream channel. Under no circumstances will equipment be allowed to operate in flowing stream channels, with the exception of booms or buckets extended into the channel to retrieve existing spoils or place riprap at the water line. Machinery wheels or tracks may not enter the channel below water line. Sediment control provisions shall be used whenever work is conducted adjacent to drainages or watercourses to control silt in runoff. Adequate silt barriers or sediment traps shall be used to comply with permit conditions and statutory requirements for all streamside work, both during and after work hours. Measures used may include staked straw bales, sediment ponds, and/or staked silt fence (Mirafi "Enviro-Fence, or equal). Sediment controls shall be considered incidental to the Work, and no separate payment will be allowed. The Contractor will be solely

responsible for the selection and implementation of sediment control measures to assure permit and statutory compliance. **An Erosion Control Plan outlining measures to be taken to control erosion and runoff must be submitted by the Contractor to the Engineer and the City of Missoula for review and approval** prior to any work activities in proximity to the Clark Fork and/or designated wetlands. Scheduling of work tasks must be included in the Plan outlining work procedures, waste disposal practices, earthwork procedures and other activities.

18. MATERIALS SALVAGE

Some of the existing equipment within the Administration Building, Blower Building and Main Lift Station has been identified in the Drawings to be salvaged for the OWNER. Such items shall be carefully recovered and delivered to the City Shop. All other materials removed on the project shall be legally disposed of by the Contractor. Disposal costs shall be part of contract unit prices.

19. PROTECTION OF ADJACENT IMPROVEMENTS

Retain and protect all adjacent improvements not called for removal on the drawings. Restore all damaged items to pre-existing condition.

20. CONSTRUCTION SURVEYS

The Contractor will be responsible for all layout and construction staking utilizing the Engineer's existing control and coordinate data for street, sidewalks, monuments, manholes, and any other construction which requires surveying. Dimensions and elevations indicated in layout of work shall be verified by the Contractor. Discrepancies between Drawings, Specifications, and existing conditions shall be referred to the Engineer for adjustment before work is performed.

Existing Engineer Control: The Engineer has set survey control (horizontal and vertical) for use in the design and ultimately the construction of these improvements. A listing of the coordinates and vertical elevation for each of these control points is included in the Plans.

Several of the Engineer's control points may have been disturbed or accidentally removed before contractor layout begins. The Contractor will be responsible for verifying the accuracy of all control points and laying out all critical project points with the remaining control points. The Contractor will be responsible for preserving and protecting the survey control until proper referencing by the Contractor has been completed. Any survey control obliterated, removed, or otherwise lost during construction will be replaced at the Contractor's expense. Any claims relating to survey location or construction staking accuracy must be supported by original control point data and verified in the field to the satisfaction of the Engineer.

The Engineer shall provide the following staking consisting of stakes or hubs:

Vertical Control – Vertical control will be provided by the existing survey monument benchmarks and control points throughout the site as shown on the Plans.

Piping - Horizontal control will be provided in the form of centerline of stationing as shown on the project drawings. Stakes shall be provided no more frequently than 200' intervals, at structures, manholes, buildings and branch fittings on piping.

The Contractor will provide all additional staking and offsets necessary for vertical and horizontal control such that the project may be completed in accordance with the plans and specifications.

The Contractor shall not order structures or tapping equipment until the field verification of the size and invert elevations is complete and furnished to the Engineer for verification.

The Contractor will utilize the services of a **Professional Land Surveyor**, currently licensed in the State of Montana, for the construction staking for this project.

The Contractor will field verify the vertical elevation of all system manholes. The Contractor will not order manholes until the field verification of rim elevations and also exploratory excavations where specified, are complete and furnished to the Engineer for verification.

Contractor shall be aware of property pins. Damage to these pins will require replacement of such by a registered land surveyor at no cost to the OWNER.

The Contractor is responsible for the location and elevation of all the construction contemplated by the Contract Documents.

Prior to commencing work, the Contractor shall carefully compare and check all drawings, each with the other that in any way affects the location or elevation of the work to be executed, and should any discrepancy be found, he shall immediately report the same to the Engineer for verification and adjustment. Any duplication of work made necessary by failure or neglect on his part to comply with this function shall be done at the contractor's expense.

21. SITE DEWATERING

Certain functions of the work to be performed may require draining, pumping and dewatering operations necessary to complete the work as specified and as indicated on the drawings. It is the intent of these specifications that such draining, pumping and dewatering operations shall be the obligation of the Contractor. The Contractor shall provide all necessary piping, as required to remove all surface water, groundwater, leakage, and water from excavations. *A separate pay item is designated for dewatering. The unit measurement for dewatering is HP•days – meaning the total dewatering pump horsepower (operating) for each day that dewatering is necessary to conduct the work.* Adequate dewatering is defined as the work required to lower the natural groundwater 12" or more below the bottom of excavation in order to install/compact a structurally stable subgrade. If the existing subgrade material is courser rock and is naturally stable, the 12" depth will not be required. Laying and installing pipe in water will not be allowed.

The presence of groundwater is possible during excavation of unsuitable materials:

- *groundwater was encountered (at 5' depth) in one of the six test pits dug for the 2024*

geotechnical report, – which generally encompasses the compost/biofilter, working apron, biosolids & pre-compost bins area;

- *No groundwater was encountered in the other five (2024 Report) test pits to a depth of 10' (the depth to competent subgrade and a minimum of 2.5' below the bottom of the deepest wall footings).*
- *Groundwater was not encountered in any of the (2017 Report) test pits or bore holes within the proposed work area.*
- *The groundwater monitoring wells (MW-3 and MW-7) adjacent to and bracketing the project area, have groundwater depth measurements taken semi-annually and generally show groundwater depths 10' to 25' below ground surface. The groundwater depth measurement data is provided in* ***Appendix D*** *of this Project Manual. In summary: the shallowest groundwater elevation measured was at 3143.58 in March 2022. Averaging all the groundwater data for MW-3 and MW-7 yields an elevation of 3138.22.*
- *To remove all the unsuitable materials, the deepest excavation onsite is estimated to reach elevation 3144.0.*

The Bidder/Contractor shall undertake all necessary investigations to determine for himself the conditions and extent of groundwater that is likely to be encountered and shall account for adequate dewatering when preparing the bid and constructing the improvements.

Stabilization – Prior to any embankment/backfill work, subgrades shall be firm, dense, and thoroughly compacted and consolidated and shall be sufficiently stable for equipment or manpower to work. Soil material that has been removed because it is too wet to permit compaction may be stockpiled and removed or spread and allowed to dry. Processing of saturated material will not be directly paid for. If the Contractor chooses to import material in lieu of processing wet materials, Contractor will assume responsibility and expense to do such. Authorization for payable import stabilization will only be per direction of Engineer.

Any discharge of water during pumping and dewatering operations will be subject to approval of the Montana State Department of Environmental Quality. The Contractor shall be responsible for obtaining any necessary discharge permits as well as any damages caused to surrounding structures, land and physical features in the area. Contractor will restore any ground that had been eroded to its natural state. The Contractor shall submit a plan for dewatering to the Engineer.

22. SUB-EXCAVATION AND STABILIZATION

Over-excavation shall be only as specifically authorized by the Engineer. Stabilization bedding and backfill will be imported and payable as specified in the Bid Form or as negotiated. Sub-excavation and stabilization, when required and approved by the Engineer, will be paid at the negotiated contract unit price.

23. IMPORTED BACKFILL

Two geotechnical studies conducted by Pioneer Technical Services (included in Appendix C of

this project manual) confirm that the project footprint has between 4' and 10'+ of woody debris overlaying competent soils for construction of the improvements. All of the unsuitable material (estimated to be 15,000 to 18,800 yd^3) will be excavated and stockpiled at a site approximately 300 yards west of the project area and still within the Garden City Compost property parcel. The Contractor must locate a source for imported backfill that meets the gradation and quality requirements outlined in the latest edition of Montana Public Works Standard Specifications, Section 02234 – 2.4.A: *4" Minus gradation:*

SIEVE SIZE	PERCENT PASSING
4-inch	100
No. 4	25 - 60
No. 40	10 - 30
No. 200	2 - 10

Native material is preferable to imported backfill for outside of the excavation/import footprint, when the native material is suitable. Examples of these areas would be the Runoff Lift Station forcemain to the plant drain and the rumble grate trough. However, use of on-site excavated soil must be approved by the Project Engineer prior to its placement. Blocky or platy clay, saturated or near saturated soils, will not be permitted for use as backfill material. The Contractor shall provide the Engineer with a Proctor (moisture/density relationship) for the backfill material.

If native material is found unsuitable for trench/excavation backfill, the Contractor shall provide Imported Trench Backfill. Imported Trench Backfill will be paid by the cubic yard at the contract unit price or negotiated change order price and wherever possible, shall be subject to a pay limit based on measured dimensions.

Import material meeting the backfill specifications ONLY when directed by Engineer.

24. TIME OF OPEN TRENCHES

The Contractor shall conduct his work so that trenches will remain open for a minimum possible time. No trench excavation shall begin until proper compaction equipment is at the site where excavation is to take place. Open trench shall be barricaded in a manner sufficient to insure public safety.

25. CONTINUOUS OPERATION OF EXISTING COMPOST FACILITY

The Contractor will be required to perform all construction activities so that the existing "Transitional" Composting Facility on the south end of the property functions appropriately without diminished treatment performance. The City will temporarily re-locate its biosolids/greenwaste mixing operation to a location that is outside the footprint of new construction and will, to the greatest extent, route heavy vehicle traffic in a manner that minimizes interference with the CONTRACTOR's work.

26. PLAN OF OPERATION

The contractor shall submit a Plan of Operation as a condition of receiving the Notice to

Proceed. This Plan will describe the schedule, means/methods and contingency procedures by which each *critical* unit process (biosolids storage; mixing; "transitional composting"; curing) of the existing compost operation will be taken out of service to allow for construction of work components constructed under this project. The Plan shall present a logical and well-developed procedure for making the required plant improvements while maintaining the City's ability to continue its composting operations uninterrupted.

The Plan of Operation will be reviewed and approved by the Engineer. The Plan will be reviewed and updated every 30 days or as required. The Plan of Operation and the Project Schedule shall be maintained for consistency and accuracy.

In order to maintain functionality of existing composting operation to the greatest extent possible, the OWNER requires that the curing facility will be the last unit process constructed onsite. The Contractor's Plan of Operation will reflect this requirement.

27. CONSTRUCTION SCHEDULE

Contactor shall submit a Construction Schedule to the OWNER with the signed Agreement or at the preconstruction conference. The Schedule shall be in horizontal bar chart form and shall indicate each significant construction activity. The beginning of each work week as well as all significant construction milestones shall be indicated by a solid vertical line. The Contractor's construction schedule(s) shall be updated no less frequently than weekly and the OWNER & Engineer shall be notified immediately of any issues that may prevent the project from being completed within the designated contract time. Time is of the essence in this project and it is incumbent upon the Contractor to schedule the work activities to allow for adequate procurement, installation, curing, testing and inspection time within the contract time.

28. TRACER TAPE

All non-metallic underground piping shall be installed with continuous tracer tape installed 12 to 18 inches under the final ground surface. No breaks or splices will be allowed. In addition to tracer tape, install 14 gauge coated copper wire, taped to the top of pipe, and thermite welded to valve body on all water supply piping. The cost of tracer tape and locator wire shall be part of the overall lump sum and schedule of values.

29. SECURITY

The Contractor shall provide all security measures necessary to assure the protection of his equipment, materials in storage, completed work, and the project in general. This may require the Contractor to hire or employ outside services to guard materials or completed work. All security measures are the Contractors responsibility, even in the event that the Contractor utilizes property owned by the OWNER for equipment & materials storage.

30. CLEANUP

Cleanup for each item of work shall be fully completed and accepted before the item is considered final. If the Contractor fails to perform cleanup within a timely manner the OWNER

reserves the right to shut down construction activities.

31. DUST CONTROL

The Contractor will be responsible for maintaining the construction zone and all haul routes to meet the City of Missoula and Missoula County regulations for air emission control. Contractor will maintain all access roads including watering as deemed necessary and ordered by the Engineer. In addition, any open excavations, stockpile areas or fills producing excessive amounts of dust shall be watered to control dust to a reasonable level, as determined by the Engineer.

32. BRUSH AND TREE REMOVAL

The Contractor shall only remove trees and brush as necessary to complete the work and as specified by the Engineer. The Contractor shall be responsible for the sawing and safely removing trees and bush, removal of all stumps and roots, sawing and removing all limbs. All brush and tree removal shall be completed while providing protection to remaining vegetation, existing utilities and properties adjacent to removal locations and final cleanup upon removal completion. Removal of brush and trees will be considered incidental to the project work.

33. WAGE RATES

Montana State wage rates as determined by the Montana Department of Labor and Federal Davis-Bacon Heavy wage rates shall prevail on all work. The appropriate wage rates are included and shall be applied to this project. The Contractor shall submit weekly payroll reports to the Engineer within seven days following completion of the work week. All required postings and sample forms will be supplied to the Contractor at the Preconstruction Conference.

34. CONTRACTOR EXPERIENCE & PERFORMANCE REQUIREMENTS

Form C-451 Qualifications Statement to be submitted with the Bid will be the used to assess a potential Contractors' qualifications. Documented interviews of previous project client contacts will also be utilized when OWNER makes a decision on contract award.

35. PREQUALIFYING EQUIPMENT AND MATERIALS

Manufacturer's requests for equipment substitutes ("or equals") for the: runoff lift station; aeration blowers; fittings; communications; controls; logic, electrical, Conex building, etc. shall be provided to and received by the Engineer at least fifteen (15) days prior to the bid opening date. The Engineer will either accept or reject the equipment substitutions within 7 days of receipt of the request for substitution. It will be the Manufacturers' responsibility to provide sufficient documentation that the substituted equipment is equal or superior to the specified equipment and that the substituted equipment will conform with existing structural, mechanical, electrical and civil constraints. Any significant redesign work that would be required to incorporate the substituted equipment may be cause for rejection. All redesign work will be at the expense of the manufacturer.

36. TRAFFIC CONTROL

The Contractor shall adhere to all traffic control requirements (if applicable) as set forth by the Manual of Uniform Traffic Control Devices for Streets and Highways (MUTCD). No additional payment will be allowed the Contractor for this work.

37. VERIFICATION OF INVERT ELEVATIONS

Invert elevations for a number of existing pipes and structures must be verified in order to: install the Runoff Lift Station discharge forcemain and connect it to the Missoula WWTP plant drain pipe. The contractor must perform necessary exploratory excavation to verify location/depth of existing utilities that are impacted by the proposed improvements.

38. PETROLEUM CONTAMINATED SOILS

While not evident from any of the available geotechnical information or history of the existing treatment facility site, there is a possibility of the Contractor(s) encountering petroleum-contaminated soils within excavations. If this occurs during construction, the Contractor will cease work in this area until a time and materials change order for the extra work can be agreed upon by the Contractor, OWNER, Engineer and the Montana DEQ Underground Storage Tank Program or other required entity. The Contractor will proceed with other elements of the project until the change order is processed at no additional cost to the OWNER.

39. TIME EXTENSION OR SHUTDOWN FOR WEATHER

A shutdown due to inclement weather may be requested by the Contractor during the winter months. The Contractor shall indicate the number of calendar days being requested in the formal shutdown request. This initial request may be extended during the shutdown period as long as such extension is justifiable and requested at least 30 days prior to the date the original extension was to elapse. Only **ONE** winter shutdown will be granted during the project. The OWNER reserves the right to approve or disapprove any shutdown or extension requests. As a condition of approval of a shutdown, the Contractor shall: provide for maintenance of flows; close all open excavations; provide for maintaining traffic; provide for protection of public property at the work site, and; provide for worker and public safety with proper barriers, barricades, warning signs and notices. The Contractor will not be allowed to perform any work during the shutdown period unless prior approval is granted by the OWNER.

Time Extension for Abnormal Weather Conditions – The Contractor may request extension of contract time for abnormal weather conditions which will be generally defined as conditions of extreme or unusual weather for a given region, elevation, or season, as determined by Engineer. Extreme or unusual weather that is typical for a given region, elevation, or season should not be considered Abnormal Weather Conditions. It will be incumbent on the Contractor to demonstrate that Abnormal Weather impacted work progress.

40. STANDARD SPECIFICATIONS

The Montana Public Works Standard Specifications and Drawings, 6th Edition, April 2010, including Appendices, are included in these project documents by reference. Where not

specified in these project documents, MPWSS will govern.

41. GEOGRID AND GEOTEXTILE

Requirements for geogrid and geotexiles are outlined in the project drawings and specifications, identifying the use of the materials where existing soils are removed and structural backfill placed. When applicable, generally the geogrid is placed in the first lift of structural fill. Suitable geogrids include Tensar BX1200, Mirafi BXG12, US Fabrics Basegrid 33 or approved equal. A nonwoven geotexile is used to separate resident soils from the structural fill and materials such as Mirafi 140NL, US Fabrics US90NW or Propex Geotex 351 are deemed acceptable. These nonwoven materials shall be used beneath the crushed base course on paved road sections.

42. PROJECT SIGN

The Contractor shall construct and install a project sign in accordance with the Funding Agency Special Provisions (Section 00 90 00). The Contractor shall submit a proposed sign design in accordance with this Section. The temporary sign shall acknowledge participation of the State Revolving Fund (SRF) and American Rescue Plan Act (ARPA). The applicable dollar amounts for the sign will be provided by the Engineer. The Engineer will review Contractor's submittal and make any comments or corrections at that time. The location of signs shall be determined by the Engineer in the field. No separate payment will be made for this work. The cost of furnishing and installing the signs shall be included in the lump sum costs of the project.

43. WARRANTY

Unless specified otherwise, the Contractor shall warranty the project for one (1) year against defective materials and defective workmanship according to the General Conditions. The project shall not be accepted as substantially complete until ALL project segments are substantially complete. Only one (1) notice of substantial completion will be issued for this project. The warranty period will begin upon date of the notice of substantial completion. The one year warranty will not supersede any project components that may have a longer warranty period.

An eleven (11) month project inspection will be held with the Contractor, OWNER, Engineer and Funding Agencies being invited to attend. At the inspection, warranty items will be defined for correction according to the General Conditions.

44. HIERACHY OF SPECIFICATION

In the event that any provision of one Contract Document conflicts with the provision of another Contract Document, the provision in that Contract Document first listed below shall govern, except as otherwise specifically stated:

- Agreement
- Addenda to Contract Documents
- Performance and Labor & Materials Bonds
- Bid Proposal
- Bid Security

- Special Provisions
- Invitation to Bid
- Instructions to Bidders
- Drawings
- Technical Specifications
- Supplementary Conditions
- General Conditions

Whenever notes, specifications, dimensions, details, or schedules in the Specifications or Drawings, or between the Specifications and Drawings, or between Change Order or Work Change Directive drawings and Contract Drawings conflict, the Contractor shall furnish the higher performance or higher quality requirement determined by the Engineer.

45. SCHEDULING OF EQUIPMENT INSTALLATION

Scheduling of start-up, demonstration testing, and instructional activities shall be subject of approval of City and Engineer. The Contractor shall coordinate scheduling of start-up, demonstration testing, and instruction of OWNER's personnel by manufacturer's representatives.

Equipment will not be operated except by, or with the guidance of, qualified personnel provided by Manufacturer/supplier having the knowledge and experience necessary to obtain proper results. All items of equipment and systems will be tested for proper operation, efficiency and capacity by qualified personnel. Contractor shall provide authorized and qualified manufacturer's representative to inspect, check, and approve equipment installation prior to start-up and to assist with demonstration testing. Authorized representative shall supervise placing equipment into operation. Contractor will be responsible for planning, supervising, and executing the installation of work.

Upon completion of inspection, adjusting and balancing, the Contractor shall demonstrate that each separate piece of equipment of each system and related mechanical or instrumentation and control equipment operate in accordance with the requirements of the Contract Documents. Where no performance requirements are specified, demonstrate the equipment operates in accordance with the manufacturer's requirements and industry standards for the specific application. When necessary for certain items of equipment, the final adjustments and inspections shall be made by factory trained service personnel (other than sales representatives), rather than by installation contractor. The Manufacturer's service personnel will also supervise the test operation. Following successful completion of the demonstration testing the Contractor shall be responsible for the operation of new equipment and/or systems for a minimum period of 30 days.

46. PERFORMANCE TESTING AND FACILITY STARTUP

The finished compost/biofilter unit processes shall undergo a 30-day performance test to demonstrate that:

- the blowers are delivering the required airflow from the compost bays and through the biofilters. *The Contractor shall provide the necessary equipment & instrumentation to accurately measure airstream velocities*;
- the control system is properly sensing media temperatures, airflow humidity, etc., and modulating the blower VFDs in the manner intended for proper treatment;
- the control system is documenting all of the necessary parameters to verify compliance with the time/temperature requirements in Garden City's compost license and in the 40CFR §503 regulations;

All systems must be operational prior to the start of the 30-day performance test. Testing of a partial system will not be accepted. Following review of the relevant information, the Engineer shall recommend approval of the equipment and acceptance of the installation to the City of Missoula. The City shall provide, in writing, notice of acceptance of the equipment within a reasonable time after receipt of Engineer's recommendation.

Upon completion of the required training, receipt of the final operation and maintenance manuals, completion of the required start-up and demonstration testing reports and following successful completion of the 30-day operating period, the Engineer shall initiate final acceptance of the project and equipment.

It is recognized that full Plant Startup and Commissioning and achieving desired performance levels may take longer than the allocated 30 day performance period. Up to 90 days, after the plant has been determined to be substantially complete, will be allowed for the plant to achieved stabilized operational conditions and be capable of meeting designed performance standards.

Acceptance by City or approval of the Manufacturer's field representative will not relieve installation contractor of responsibility for defective work.

END OF SECTION 00 95 10

DIVISION 1

GENERAL REQUIREMENTS

SECTION 01 11 00
SUMMARY OF WORK

PART 1 - GENERAL

1.01 PROJECT

A. Project Name: Garden City Compost Improvements Project.

B. OWNER's Name: City of Missoula.

C. Project Design Team:

1. Anderson-Montgomery Consulting Engineers, Inc.
   1064 N. Warren St.
   Helena, MT 59601
   406-449-3303 (office)

2. Jacobs Engineering Group
   4133 Corbin Drive
   Billings, MT 59106
   406-697-4332

D. The Project consists of the following major project elements to be conducted at the Garden City Compost Facility in Missoula, Montana:

1. The **Base Bid** Work is generally described as follows:

- Excavation and onsite stockpiling of approximately 15,000 yd^3 of unsuitable fill material;
- Import, backfill and compaction of approx. 22,300 yd^3 of 4"-minus structural fill;
- 12-bay, aerated static pile (ASP) composting system with reversing pressure operating capabilities – complete with: blowers; VFD's; aeration piping; dampers; in-floor aeration grates; concrete slab, push walls & footings; embedments; condensate collection and conveyance system;
- Two biofilters – complete with blowers; VFD's; delivery/diffuser piping; dampers; irrigation system; mud mat, concrete slab, containment walls & footings;
- Runoff collection system including three catch basins, submersible lift station and forcemain to the Missoula WRF plant drain;
- Sensing & control system - complete with wireless temperature probes O_2 sensors, manual dampers, communications, outputs to VFD's, data logging, alarms, etc.;
- New biosolids cake storage bin and pre-compost bin with new concrete slabs, embedments and cast-in-place walls/footings;
- Conex Control Building – support piers; HVAC; doors; windows; lighting; electrical;

- Condensate Collection: piping; sumps; grinder pump station; forcemain;
- Concrete rumble grate trough;
- Irrigation supply system: drilled groundwater well; casing; screen; drop pipe; pitless; piping; pump; pressure control system; irrigation control system; sprinkler piping and rotary heads;
- Ancillary site improvements, utility piping, communications systems and surface restoration

2. The **Additive Alternate A** Work is generally described as:

- Five-bay, aerated curing system utilizing blowers, diffuser piping and Eco-Blocks from the City's existing "Transitional Facility";

3. The **Additive Alternate B** Work is generally described as:

- Excavation and onsite stockpiling of approximately 1,820 yd^3 of unsuitable fill material;
- Import, backfill and compaction of approx. 3,120 yd^3 of 4"-minus structural fill;

Full, one-year warranty on materials and workmanship on all improvements.

1.02 CONTRACT DESCRIPTION

A. Contract Type: A single prime contract based on a Stipulated Price as described in this Document.

1.03 WORK BY OWNER

A. The OWNER will remove all equipment, vehicles, active compost materials and miscellaneous items that represent obstacles to construction, that currently occupy the Work area before the Contractor begins demolition work. The OWNER will facilitate the relocation of existing gas and overhead electrical utilities. Any items that are in the way of demolition/construction within the Work area shall become the property of the Contractor unless specifically identified for salvage by the OWNER. It will be the responsibility of the Contractor to dispose of all non-salvage items as waste as outlined in these documents. Salvaged items/materials shall be moved to a location within the property identified by the OWNER.

1.04 OWNER OCCUPANCY

A. The existing Work area identified in this summary is currently occupied by the OWNER in its day-to-day compost operation activities. Contractor shall cooperate with the OWNER to minimize conflict due to demolition and construction activities although it is acknowledged that construction progress is will take precedence. Contractor shall coordinate with the OWNER in order to accommodate their ongoing operations at all times.

1.05 CONTRACTOR USE OF SITE AND PREMISES

A. The Contractor shall conduct operations and take all necessary precautions to protect staff from exposure to dangers associated with the Work. Coordination and cooperation with

the Garden City Compost Facility and Missoula Water Reclamation Facility staff and Public Works Department as a whole is of the utmost importance.

B. Provide secure access to and from designated work area as required by law and per the requirements of the OWNER:

1. Emergency entrance and exit during construction: Keep all exits required by code open during construction period; provide temporary exit signs if exit routes are temporarily altered.

2. Do not obstruct roadways, sidewalks, or other public ways without permit.

C. Existing building spaces may not be used for storage unless specifically authorized by the OWNER.

D. Time Restrictions:

1. Limit conduct of especially noisy and dusty exterior work to the hours of 7 am to 7 pm.

E. Utility Outages and Shutdown:

1. Interruption of any utility services must be coordinated through the Chief Operator. This coordination is to allow the reasonable use of the existing facilities at all times during normal working hours and interfere minimally with the OWNER's operational activities.

2. Do not disrupt or shut down utility services without 7 days notice to the City and authorities having jurisdiction.

3. Prevent accidental disruption of utility services to other facilities.

1.06 WORK SEQUENCE

1. It will be necessary to conduct the demolition and construction work in a manner that minimizes (to the extent possible) disruption to the existing compost operations. This includes but is not limited to work involving: the biosolids cake storage bin; biosolids/green waste mixer access; access to and salvaging materials from the existing "Transitional Facility". See Section 01 12 16 for additional information on Work Sequence.

2. The Contractor will closely coordinate with the OWNER and Engineer before conducting any work that impacts existing facilities or overall capacity of the existing composting & green waste facility.

PART 2 - PRODUCTS - NOT USED

PART 3 - EXECUTION - NOT USED

END OF SECTION 01 11 00

SECTION 01 12 16
WORK SEQUENCE

PART 1 - GENERAL

1.01 SUMMARY

A. This Section includes:

1. General Work Sequence.
2. Sequence of Construction.
3. Electrical Sequence of Construction.
4. Damages.

1.02 GENERAL WORK SEQUENCE

A. There is no emergency or other offline storage available at this site for temporary bypass operations. Limited storage capacity may be available in the treatment lagoons through adjustment of lagoon levels to create storage volume. All work will need to be done while maintaining operation of the existing "Transitional" composting facilities.

B. Coordinate construction schedule and operation with OWNER and Engineer. Accommodate OWNER occupancy requirements.

C. Contractor shall submit a detailed Plan of Operation estimating all dates when interruption, temporary or bypass, will occur. Dates shall be updated as construction progresses. Special Provision 26 of these Contract Documents describes the Plan.

D. Contractor shall stay within time restraints for certain construction tasks as identified in the Contract Documents.

E. Contractor shall provide OWNER and Engineer full access to new and existing facilities for the duration of the project.

1.03 SEQUENCE OF CONSTRUCTION

A. The following sequence of work will be necessary to:

1. provide uninterrupted handling of treated biosolids coming from Missoula's Water Reclamation Facility (MWRF);
2. acceptance of green waste;
3. furnishing compost products to customers.

Contractor shall generally perform its work in a manner that preserves these functions - in the order indicated and within any time constraints specified. This is not an exhaustive list of all work to be completed, but gives general idea of the sequencing required.

B. The work sequence provided herein is for the Contractor's information. Contractor is encouraged to modify the sequence in order to meet its needs and/or add features to increase workability - subject to the approval of the OWNER and Engineer, and providing such modifications permit the facility to meet its SWMS license and applicable regulations.

C. General: ***See Sheet D-1***

1. Surplus material will be removed from the footprint of the: new ASP composting & biofilter pads; alley; green waste storage area; pad south of existing mixer; control building and blower pad footprint;
2. Maintain access to the Transitional Facility;
3. Make provisions for GCC to truck biosolids cake from the Solids Handling Building to a temporary mixing site between the existing Transitional Facility and the MWRF Aeration Basin;
4. Sawcut, demolish/remove the existing concrete slab (approx. 3,000 ft^2) south and west of the existing Mixer – GCC will temporarily de-commission the Mixer and re-locate its two control panels to get them out of the way;
5. Demolish/remove the existing biosolids cake storage bin walls/floor slab – protect the existing groundwater monitoring well directly north and adjacent to the north bin wall;
6. Excavate unsuitable subgrade material from the <u>east half</u> of the ASP compost/biofilter #2/working alley area and biosolids bin footprint (approx. 9,300 yd^3), import MPW 4" minus backfill (approx. 13,150 $yd^{3)}$ and compact to 95% standard proctor;
7. Install pre-cast concrete structures for: CB-2; CB-3; biofilter #2 sump; compost condensation collection sump; runoff lift station wetwell;
8. Install 4" forcemain from runoff lift station structure to plant drain manhole;
9. Install in-floor aeration piping, condensate collection piping, and base course for wall footings in east half of ASP facility & biofilter #2;
10. Form and cast all footings and vertical concrete for east half of ASP compost walls; biofilter #2 backwall; biosolids bin and pre-compost bin walls;
11. Install 400 amp feeder and fusible disconnect in MSB-A to MSB-6 at Solids Handling; install all buried electrical/control conduit from Solids Handling Building to new locations for: new Control Building; Runoff Lift Station; compost & biofilter blowers; curing blowers; groundwater well and E-One station;
12. Cast all flat concrete for east half of ASP compost; biofilter, biosolids and pre-compost bin slabs;
13. Continue excavation of unsuitable subgrade material from the <u>west half</u> of the ASP compost/biofilter #1/working alley area (approx. 6,500 yd^3), import MPW 4" minus backfill (approx. 9,150 yd^3) and compact to 95% standard proctor – note this step can occur simultaneously with items #7 thru #9.
14. Install pre-cast concrete structures for: CB-1 and biofilter #1 sump;
15. Install in-floor aeration piping, condensate collection piping, and base course for wall footings in west half of ASP & Biofilter #1;
16. Form and cast all footings and vertical concrete for west half of ASP compost walls; biofilter #1 backwall;
17. Form and cast all flat concrete for west half of ASP compost & biofilter #1 slabs, keyed footings for biofilter walls and alley slab;
18. Allow all cast-in-place concrete in east half of ASP, working alley, biofilter #2 and biosolids & pre-compost bins to reach 21-day strength.

19. Re-establish conveyor operation from Solids Handling Building to the new biosolids bin and re-start mixer operation;
20. Establish wheeled loader route from pre-compost bin, through concrete alley and biofilter #2 to existing transitional facility;
21. Install Conex control building;
22. Install twelve ASP compost blowers and both biofilter blowers, all surface piping and electrical – note this step can occur simultaneously with items #14 thru #16;
23. Install and integrate ASP blowers, controls, probes, sensors, dampers – test operation of all new aeration infrastructure;
24. Drill new irrigation well – install pump/drop pipe, delivery piping and pressure control system;
25. Clear and level area for curing process (approx. 18,800 ft^2) and excavate to sound subgrade for curing back push wall footing and curing blower equipment slab (***note – curing is to be the last unit process constructed on the overall project***);
26. Form and cast curing back push wall footing and curing blower equipment slab;
27. De-commission east half of existing transitional facility – scavenge/move EcoBlocks (240 full/solid; 25 full/perforated; 10 half/solid) to build new curing facility back push wall and side walls;
28. Scavenge/move: aeration piping; 40hp blower; twenty-five 6" diameter HDPE aeration lines; VFD and control panel from east half of existing transitional facility and install in new curing facility – in new Tuff Shed;
29. Integrate new curing aeration system with overall system controls;
30. Equipment testing and calibration;
31. Install biofilter media material;
32. Commission new ASP facility – begin stacking compost mix on negative pressure aerated floor;

Work that can occur at any point along the construction schedule includes:

1. Forming and casting the concrete rumble grate trough;

1.04 ELECTRICAL SEQUENCE OF CONSTRUCTION

A. Coordinate electrical construction sequence with general, process, and civil/mechanical sequencing to maintain continual composting operation.

B. Provide temporary wiring to all loads during changeovers and to facilitate new construction. Install and maintain temporary wiring in accordance with NEC Article 305.

C. Where new power distribution and/or motor control equipment is to be installed in place of existing equipment, comply with the following.

1. Install and energize new equipment. Relocate existing equipment if space conflicts occur. Provide temporary feeders as required.

2. Transfer loads from existing equipment to new equipment one at a time. Ensure operation of each load prior to proceeding to next load.

3. Provide temporary control and signal wiring to maintain automatic control of automatically-operated equipment. Maintain safety interlocks for all control circuits.
4. After all loads have been transferred, remove existing equipment and wiring. Permanently wire new equipment.

D. For each treatment process having redundant equipment that is to be used during construction, only one of the redundant equipment items shall be disabled at a time (e. g. existing compost blowers).

E. If equipment is not capable of operating in an automatic mode with personnel and equipment safety devices functional, then the Contractor shall coordinate closely with the OWNER and Plant Superintendent to implement a strategy that achieves the operational and safety goals of the compost plant.

1.05 SUMMARY

A. All parties involved with the proposed Garden City Compost (GCC) Facility Improvements Project including the Contractor, and OWNER need to strive for a common goal of keeping the existing facilities operational and able to manage incoming biosolids and all bulking agent materials in accordance with the SWMS license requirements.

B. In an attempt to prevent any inadvertent disruptions to the compost facility, the Contractor, through the OWNER's Resident Project Representative, shall adequately communicate his intended plans and activities with the GCC Superintendent (OWNER), and Engineer. The OWNER recognizes the Contractor may require scheduled unit process shutdowns in order to complete some necessary task. The OWNER will make a reasonable attempt to alter operational procedures, including temporary shutdowns to allow for Contractor work. Contractor shall notify OWNER and Engineer of planned shut downs in accordance with the Contract Documents.

PART 2 - PART 2 PRODUCTS (Not Used)

PART 3 - PART 3 EXECUTION (Not Used)

END OF SECTION 01 12 16

SECTION 01 20 00
REQUIRED FORMS

PART 1 - GENERAL

1.01 SECTION INCLUDES

A. Procedures and forms for preparation and submittal of applications for progress payments.

B. Documentation of changes in Contract Sum and Contract Time.

C. Change procedures.

D. Correlation of Contractor submittals based on changes.

E. Procedures for preparation and submittal of application for final payment.

1.02 SCHEDULE OF VALUES

A. Form to be used: Schedule of Values for Contract Payment – follow instructions in Section 01 29 00 Part 1.03

B. Forms filled out by hand will not be accepted.

C. Format: Utilize the Table of Contents of this Project Manual. Identify each line item with number and title of the specification Section.

D. Revise schedule to list approved Change Orders, with each Application For Payment.

1.03 APPLICATIONS FOR PROGRESS PAYMENTS

A. Form to be used: Application for Payment (Section 00 62 76).

B. Forms filled out by hand will not be accepted.

C. Execute certification by signature of authorized officer.

D. Use data from approved Schedule of Values. Provide dollar value in each column for each line item for portion of work performed.

E. List each authorized Change Order as a separate line item, listing Change Order number and dollar amount as for an original item of Work.

F. Submit electronic copy of each Application for Payment.

1.04 MODIFICATION PROCEDURES

A. Submit name of the individual authorized to receive change documents and who will be responsible for informing others in Contractor's employ or subcontractors of changes to the Contract Documents.

B. For minor changes in the work not involving adjustment in the Contract Sum or Contract Time, the Engineer will issue instructions directly to Contractor by written order. The Contractor shall carry out such written orders promptly.

C. For required changes, Engineer will issue a document signed by Owner instructing Contractor to proceed with the change, for subsequent inclusion in a Change Order.

1. Form to be used: Work Change Directive (Section 00 63 49)
2. The document will describe the required changes and will designate method of determining any change in Contract Sum or Contract Time.
3. Promptly execute the change.

D. For changes for which advance pricing is desired, Engineer will issue a document that includes a detailed description of a proposed change with supplementary or revised drawings and specifications, a change in Contract Time for executing the change and the period of time during which the requested price will be considered valid. Contractor shall prepare and submit a fixed price quotation within seven (7) days.

E. Contractor may propose a change by submitting a request for change to Engineer, describing the proposed change and its full effect on the Work, with a statement describing the reason for the change, and the effect on the Contract Sum and Contract Time with full documentation.

F. Computation of Change in Contract Amount: As specified in the Agreement and Conditions of the Contract.

1. Form to be used: Change Orders (Section 00 63 63)

a. Change Orders: Engineer will issue Change Orders for signatures of parties as provided in the Conditions of the Contract.

b. After execution of Change Order, promptly revise Schedule of Values and Application for Payment forms to record each authorized Change Order as a separate line item and adjust the Contract Sum.

c. Promptly revise progress schedules to reflect any change in Contract Time, revise sub-schedules to adjust times for other items of work affected by the change, and resubmit.

1.05 APPLICATION FOR SUBSTANTIAL COMPLETION

A. Form to be used: Certificate of Substantial Completion (Section 00 65 16)

1. Substantial Completion is the stage in the progress of the work when the Work or designated portion thereof is sufficiently complete in accordance with the Contract Documents so that the Owner can utilize the work for its intended use.
2. Substantial Completion establishes the responsibilities of the Owner and Contractor for security, maintenance, heat, utilities, damage to the Work and insurance.

1.06 APPLICATION FOR FINAL PAYMENT

A. Prepare Application for Final Payment as specified for progress payments, identifying total adjusted Contract Sum, previous payments, and sum remaining due.

B. Application for Final Payment will not be considered until the following have been accomplished:

1. All closeout procedures specified in Section 00 72 00.

2. Contractor's Affidavit of Completion, Payment of Debts and Claims, and Release of Liens.
3. Consent of Surety Company to Final Payment.

PART 2 - PRODUCTS - NOT USED

PART 3 - EXECUTION - NOT USED

END OF SECTION 01 20 00

SECTION 01 26 00
CONTRACT MODIFICATION PROCEDURES

PART 1 - GENERAL

1.01 RELATED DOCUMENTS

A. Drawings and Special Provisions of the Contract, including general and Supplementary Conditions and other Division 1 Specifications Sections, apply to this Section.

1.02 SUMMARY

A. This Section specifies administrative and procedural requirements for handling and processing Contract modifications.

B. Related Sections include the following:

1. Division 1 Section "Payment Procedures" for administrative requirements.

2. Division 1 Section "Product Requirements" for administrative procedures for handling requests for substitutions made after Contract award.

1.03 VARIATIONS IN WORK

A. Engineer will issue a Field Order authorizing variations in Work, not involving adjustment of the Contract Sum or the Contract Time.

1.04 PROPOSAL REQUESTS

A. Owner-initiated Proposal Requests: Engineer will issue a detailed description of proposed changes in the Work that may require adjustment to the Contract Sum or the Contract Time. If necessary, the description will include supplemental or revised Drawings and Specifications.

1. Proposal Requests issued by Engineer are for information only. Do not consider them instructions either to stop work in progress or to execute the proposed change.

2. Within time specified in the Proposal Request after receipt of Proposal Request, submit a quotation estimating cost adjustments to the Contract Sum and the Contract Time necessary to execute the change.

a. Include a list of quantities of products required or eliminated and unit costs, with total amount of purchases and credits to be made. If requested, furnish survey data to substantiate quantities.

b. Indicated applicable taxes, delivery charges, equipment rental, and amounts of trade discounts.

c. Include an updated Contractor's Construction Schedule that indicates the effect of the change, including, but not limited to, changes in activity duration, start and finish times, and activity relationship. Use available total float before requesting an extension of the Contract Time.

B. Contractor-Initiated Proposals: If latent or unforeseen conditions require modifications to the Contract, Contractor may propose changes by submitting a request for a change to Engineer.

1. Include a statement outlining reasons for the change and the effect of the change on the Work. Provide a complete description of the proposed change. Indicate the effect of the proposed change on the Contract Sum and the Contract Time.
2. Include a list of quantities of products required or eliminated and unit costs, with total amount of purchases and credits to be made. If requested, furnish survey data to substantiate quantities.
3. Indicate applicable taxes, delivery charges, equipment rental, and amounts of trade discounts.
4. Include an updated Contractor's Construction Schedule that indicates the effect of the change, including, but not limited to, changes in activity duration, start and finish times, and activity relationship. Use available total float before requesting an extension of the Contract Time.
5. Comply with requirements in Division 1 Section "Product Requirements" if the proposed change requires substitution of one product or system for product or system specified.

1.05 CHANGE ORDER PROCEDURES

A. On Owner's approval of a Proposal Request, the Engineer will issue a Change Order for signatures of Owner and Contractor.

B. Change Order Form shall be in accordance with Section 00 63 63 of these Specifications

1.06 WORK CHANGE DIRECTIVE

A. Work Change Directive: Engineer may issue a Work Change Directive on EJCDC Document C-940 form – see Section 00 63 49 of these specifications. Work Change Directive instructs Contractor to proceed with a change in the Work, for subsequent inclusion in a Change Order.

B. Work change Directive contains a complete description of change in the Work. It also designates method to be followed to determine change n the Contract Sum or the Contract Time.

C. Documentation: The Contractor shall maintain detailed records on a time and material basis for work required by the Work Change Directive.

D. After completion of change, submit an itemized account and supporting data necessary to substantiate cost and time adjustments to the Contract.

PART 2 - PRODUCTS (Not Used)

PART 3 - EXECUTION (Not Used)

END OF SECTION 01 26 00

SECTION 01 27 00
MEASUREMENT AND PAYMENT

PART 1 - GENERAL

1.01 RELATED DOCUMENTS

A. Drawings and Special Provisions of the Contract, including general and Supplementary Conditions and other Division 1 Specifications Sections, apply to this Section.

1.02 SUMMARY

A. This Section specifies administrative and procedural requirements for measurement and payment.

1.03 DEFINITIONS

A. Unit price is an amount proposed by bidders, stated on the Bid Form, as a price per unit of measurement for materials or services added to or deducted from the Contract Sum by appropriate modification, if estimated quantities of Work required by the Contract Documents are increased or decreased.

1.04 PROCEDURES

A. Unit prices include all necessary material, plus cost for delivery, installation, insurance, overhead, and profit.

B. Measurement and Payment: The Measurement and Payment sections do not necessarily name all incidental items required to complete the work. The cost of all such incidentals shall be included in the various related items of work. All estimated quantities stipulated in the Bid Forms or other Contract Documents are approximate and are to be used only as a basis for estimating the probable cost of the work and for the purpose of comparing the proposals submitted for the work. It is understood and agreed that the actual amounts of work performed and materials furnished under unit price items may differ from such estimated quantities and the payment for such work and materials shall be based on the actual amount of work done and materials furnished in each case.

C. If actual amount of work performed and materials furnished under unit price items is different than the estimated amount in the Bid Form, the Contractor shall supply to the Engineer, the necessary information to determine the actual quantity of work performed. Significant discrepancies between actual and estimated quantities for unit price items will be handled in accordance with Articles 10 and 11 of the General Conditions.

D. List of Bid Items: A list of unit Bid Items is included at the end of this Section.

PART 2 - PRODUCTS (Not Used)

PART 3 - EXECUTION

3.01 LIST OF BID ITEMS

A. **Bid Items 100, 200, 300: Mobilization/Bonding/Insurance**

1. Description: This item shall cover the costs of preparatory work and operations including, but not limited to, those necessary for the movement of personnel, equipment, permitting, supplies and incidental to the project site; for the establishment of all facilities necessary for the work on the project; THIS ITEM SHALL NOT EXCEED 12% OF THE INDIVIDUAL BID SCHEDULE TOTAL AMOUNT(S).

2. Unit of Measurement: Lump Sum

3. Measurement: When the percentage of the original contract amount for each unit shown below is earned, the percentage of the Contract Lump Sum price for MOBLIZATION shown will be paid.

Percentage of Original Contract Amount In-Place	Percentage of Lump Sum Price for Mobilization Earned
5	50
50	75
100	100

4. Payment: Payment for MOBILIZATON will be made on the percentage of the contract unit price bid per lump sum as indicated in the Bid Form.

B. **Bid Item 102: Miscellaneous Work**

1. Description: This item shall consist of performing additional work on a negotiated basis up to a limit of $100,000.

2. Work will include additional scope items as determined by the OWNER and Engineer in consultation with the CONTRACTOR. Work will not include scope directly or incidentally covered in any other bid item herein.

3. Unit of Measurement: Dollar

4. Measurement: Measurement shall be per each additional dollar as indicated in the Bid Form.

5. Payment: Payment shall be made at the contract unit price bid per dollar as specified in the Bid Form.

C. **Bid Item 104: Exploratory Excavation**

1. Description: This item shall consist of providing necessary and appropriate excavating equipment and labor for excavation and backfill for purposes of locating buried utilities and structures.

2. Work required shall include: Furnishing all labor, tools, equipment, materials, submittals and incidentals necessary to complete the work as specified. Disposal and surface restoration, if required in exploratory work, shall be included.

3. Unit of Measurement: Actual time to the nearest half hour for which the equipment is used and authorized by the engineer, including standby time between excavation and backfilling to allow the Engineer to make necessary surveys of underground utilities.

4. Measurement: Measurement shall be per hour as indicated in the Bid Form.

5. Payment: Payment shall be made at the contract unit price bid per hour as specified in the Bid Form.

D. **Bid Item 106: Demolition/Salvage/Re-Locate Existing Infrastructure**

1. Description: This item shall consist of removing & disposing of existing concrete/rebar; salvaging, stockpiling and re-placing all materials to be re-purposed in the new facility.

2. Work required shall include: sawcutting, demolishing, removal and disposal of concrete; dismantling and stockpiling identified portions of the existing Transitional Facility aeration system, mechanical, piping, EcoBlocks, chainlink fencing fabric and cross members, all labor, tools, equipment, submittals and incidentals necessary to complete the work as specified.

3. Unit of Measurement: Lump Sum

4. Measurement: Measurement shall be per individual demolition/salvage activity completed.

5. Payment: Payment shall be made in accordance with the percentage of demolition/salvage/re-location work completed, applied to the overall lump sum as specified in the Bid Form.

E. **Bid Items 108, 202, 302, 306: Excavate Unsuitable Material**

1. Description: These items consist of excavation and offsite stockpiling of all unsuitable materials within the construction footprint as outlined in the contract drawings. *Base Bid is for the compost/biofilters, Schedule 2 is for the Curing Facility, Schedule 3 is for the curing interior and green waste storage area.*

2. Work required shall include: excavation, subgrade stabilization, compaction tests, sheeting and shoring, testing, labor, tools, equipment, *surveying and volumetric calculations*, submittals and incidentals necessary to complete the work as specified. Note that dewatering is covered under a separate bid item.

3. Unit of Measurement: bank (in-place) cubic yard (yd^3)

4. Measurement: Measurement shall be per ***bank*** cubic yard as indicated in the Bid Form. Measurement could also be made in ***loose*** cubic yards (hauled) provided that the contractor provides an accurate empirical comparison of bank vs. loose cubic yards ("swell") and periodically confirms this ratio by repeating and reporting the empirical comparison to the OWNER and Engineer.

5. Payment: Payment shall be made at the contract unit price bid per each ***bank*** cubic yard as specified in the Bid Form. Any payment based on ***loose*** cubic yards will reflect the swell ratio with a proportional reduction in the unit price.

F. **Bid Items 110; 204; 304, 308: Imported Engineered Fill**

1. Description: These items consist of imported engineered fill within the construction footprint to the subgrade and surface contours as outlined in the contract drawings. *Base Bid is for the compost/biofilters, Schedule 2 is for the Curing Facility, Schedule 3 is for the curing interior and green waste storage area.*

2. Work required shall include: identifying and securing a source of MPW 4" Minus granular material; hauling; placement; compaction; gradation & compaction testing; labor, tools, equipment, *surveying and volumetric calculations*, submittals and incidentals necessary to complete the work as specified. Note that dewatering is covered under a separate bid item.

3. Unit of Measurement: bank (in-place) cubic yard (yd^3)

4. Measurement: Measurement shall be per ***compacted in place*** cubic yard *compacted in place* as indicated in the Bid Form. Measurement could also be made in ***loose*** cubic yards (hauled) provided that the contractor provides an accurate empirical comparison of compacted in place vs. loose cubic yards ("swell") and periodically confirms this ratio by repeating and reporting the empirical comparison to the OWNER and Engineer.

5. Payment: Payment shall be made at the contract unit price bid per each ***compacted in place*** cubic yard as specified in the Bid Form. Any payment based on ***loose*** cubic yards will reflect the swell ratio with a proportional reduction in the unit price.

G. **Bid Item 112: De-Watering**

1. Description: This item consists of any necessary dewatering of the excavation necessary to provide a stable working surface and to provide adequate resistive force to achieve required subgrade and imported material compaction.

2. Work required shall include: the provision of all necessary pumping equipment; power supply and feeds; sump excavation; fuel; operation/maintenance; labor, tools, equipment and incidental necessary to complete the work as specified.

3. Unit of Measurement: Horsepower • days

4. Measurement: Measurement shall be per pump horsepower for each day of ***active*** dewatering as indicated in the Bid Form.

5. Payment: Payment shall be made at the contract unit price bid per HP•day as specified in the Bid Form.

H. **Bid Item 114: Runoff Lift Station & Forcemain**

1. Description: This item consists of furnishing and installing the Runoff Lift Station and the forcemain to the Missoula WRF plant drain.
2. Work required shall include: Excavation; backfill; gravel; pre-cast concrete structure; mechanical equipment; piping; connections; valves; vault enclosure; controls; electrical feed; dewatering; sheeting; shoring; bedding; utility crossings; pavement section replacement; surface restoration; all labor; tools spare parts; equipment; submittals; O&M materials; testing and incidentals necessary to complete the work as specified.
3. Unit of Measurement: Lump Sum
4. Measurement: Measurement shall be per lump sum for the *completed/operational/tested* lift station as indicated in the Bid Form.
5. Payment: Payment shall be made at the contract unit price bid per lump sum as specified in the Bid Form.

I. **Bid Item 116: Runoff Catch Basins & Gravity Sewer**

1. Description: This item consists of furnishing and installing the three runoff catch basins and gravity sewer pipe connecting them to the Runoff Lift Station;
2. Work required shall include: Excavation; pre-cast concrete structures; castings; grates; concrete collars; riser rings; backfill; gravel; non-shrink grout; dewatering; sheeting; shoring; pipe bedding; surface restoration; all labor; tools; equipment; submittals; and incidentals necessary to complete the work as specified.
3. Unit of Measurement: Lump Sum
4. Measurement: Measurement shall be per lump sum or completed portion thereof as indicated in the Bid Form.
5. Payment: Payment shall be made at the contract unit price bid per lump sum or completed portion thereof as specified in the Bid Form.

J. **Bid Item 118: Condensate Sumps & Gravity Piping**

1. Description: This item consists of furnishing and installing the four condensate sumps and gravity sewer pipe connecting them to the runoff catch basins and Condensate Lift Station (Bid Item #120);
2. Work required shall include: Excavation; pre-cast concrete structures; lids; castings; concrete collars; riser rings; backfill; gravel; non-shrink grout; dewatering; sheeting; shoring; pipe bedding; surface restoration; all labor; tools; equipment; submittals; and incidentals necessary to complete the work as specified.
3. Unit of Measurement: Lump Sum
4. Measurement: Measurement shall be per lump sum or completed portion thereof as indicated in the Bid Form.

5. Payment: Payment shall be made at the contract unit price bid per lump sum or completed portion thereof as specified in the Bid Form.

K. **Bid Item 120: Condensate Lift Station & Forcemain**

1. Description: This item consists of furnishing and installing the submersible grinder pump station and forcemain to convey condensate to the Runoff Lift Station;
2. Work required shall include: Excavation; pre-fabricated wetwell structure; lid; access way; grinder pumps; motors; piping; fittings; valves; quick connects; control panel; backfill; gravel; non-shrink grout; dewatering; sheeting; shoring; pipe bedding; surface restoration; all labor; tools; equipment; submittals; and incidentals necessary to complete the work as specified.
3. Unit of Measurement: Lump Sum
4. Measurement: Measurement shall be per lump sum or completed portion thereof as indicated in the Bid Form.
5. Payment: Payment shall be made at the contract unit price bid per lump sum or completed portion thereof as specified in the Bid Form.

L. **Bid Item 122: Irrigation Well, Pump, Piping, Controls, Valves, Risers, Heads**

1. Description: This item consists of furnishing and installing the entire biofilter irrigation system – from supply well to the sprinkler heads mounted in the two biofilters.
2. Work required shall include: drilling/casing/screening/grouting/developing & testing new well; pitless adapter; submersible well pump; drop pipe; spacers; well cap; power cable; conveyance piping; control system; pressure tank; pressure switch; irrigation control valves; valve box; electrical/control panels; irrigation piping; fittings; sprinkler heads; all labor; tools; equipment; submittals; O&M materials; testing; startup and incidentals necessary to complete the work as specified..
3. Unit of Measurement: Lump Sum
4. Measurement: Measurement shall be per lump sum or completed portion thereof as indicated in the Bid Form.
5. Payment: Payment shall be made at the contract unit price bid per lump sum or completed portion thereof as specified in the Bid Form.

M. **Bid Item 124: Conex Control Building - Complete**

1. Description: This item consists of furnishing and installing the Conex Control Building structure - complete.
2. Work required includes: Excavation; backfill; concrete anchoring piers; welding; sidewalks; doors; windows; interior wall; furring; insulation; penetrations; flooring; wall/ceiling treatments; primer; interior/exterior coatings; all labor; tools; equipment; submittals; certifications; testing; and incidentals necessary to complete the work as specified.

3. Unit of Measurement: Lump Sum

4. Measurement: Measurement shall be per lump sum or completed portion thereof as indicated in the Bid Form.

5. Payment: Payment shall be made at the contract unit price bid per lump sum or completed portion thereof as specified in the Bid Form.

N. **Bid Item 126: Biosolids Bin Footing & Walls**

1. Description: This item consists of installing the new concrete Biosolids Bin base footings and vertical walls.

2. Work required shall include: Excavation; backfill; subgrade prep; sub-base; furnishing/forming/casting/curing/stripping/finishing/testing concrete; reinforcing steel; embedments; armoring; all labor; tools; equipment; submittals; testing; and incidentals necessary to complete the work as specified.

3. Unit of Measurement: Lump Sum

4. Measurement: Measurement shall be per lump sum or completed portion thereof as indicated in the Bid Form.

5. Payment: Payment shall be made at the contract unit price bid per lump sum or completed portion thereof as specified in the Bid Form.

O. **Bid Item 128: Biosolids Bin Flatwork**

1. Description: This item consists of installing the new concrete Biosolids Bin slab.

2. Work required shall include: Excavation; backfill; subgrade prep; sub-base; forming/casting/curing/stripping/finishing/testing concrete; reinforcing steel; embedments; armoring; crane rails; all labor; tools; equipment; submittals; testing; and incidentals necessary to complete the work as specified.

3. Unit of Measurement: Lump Sum

4. Measurement: Measurement shall be per lump sum or completed portion thereof as indicated in the Bid Form.

5. Payment: Payment shall be made at the contract unit price bid per lump sum or completed portion thereof as specified in the Bid Form.

P. **Bid Item 130: Pre-Compost Bin Footing & Walls**

1. Description: This item consists of installing the new concrete Pre-Compost Containment Bin base footings and vertical walls.

2. Work required shall include: Excavation; backfill; subgrade prep; sub-base; furnishing/forming/casting/curing/stripping/finishing/testing concrete; reinforcing steel; embedments; armoring; all labor; tools; equipment; submittals; testing; and incidentals necessary to complete the work as specified.

3. Unit of Measurement: Lump Sum

4. Measurement: Measurement shall be per lump sum or completed portion thereof as indicated in the Bid Form.

5. Payment: Payment shall be made at the contract unit price bid per lump sum or completed portion thereof as specified in the Bid Form.

Q. **Bid Item 132: Pre-Compost Bin Flatwork**

1. Description: This item consists of installing the new concrete Pre-Compost Containment Bin slab.

2. Work required shall include: Excavation; backfill; subgrade prep; sub-base; forming/casting/curing/stripping/finishing/testing concrete; reinforcing steel; embedments; armoring; all labor; tools; equipment; submittals; testing; and incidentals necessary to complete the work as specified.

3. Unit of Measurement: Lump Sum

4. Measurement: Measurement shall be per lump sum or completed portion thereof as indicated in the Bid Form.

5. Payment: Payment shall be made at the contract unit price bid per lump sum or completed portion thereof as specified in the Bid Form.

R. **Bid Item 134: Compost/Biofilter Footing & Walls**

1. Description: This item consists of installing the new concrete base footings and vertical walls for the compost bays and biofilters.

2. Work required shall include: Excavation; backfill; subgrade prep; sub-base; furnishing/forming/casting/curing/stripping/finishing/testing concrete; reinforcing steel; embedments; armoring; penetrations; all labor; tools; equipment; submittals; testing; and incidentals necessary to complete the work as specified.

3. Unit of Measurement: Lump Sum

4. Measurement: Measurement shall be per lump sum or completed portion thereof as indicated in the Bid Form.

5. Payment: Payment shall be made at the contract unit price bid per lump sum or completed portion thereof as specified in the Bid Form.

S. **Bid Item 136: Compost/Biofilter/Apron Flatwork**

1. Description: This item consists of installing the new concrete flatwork for the compost bays, biofilter and working apron slabs.

2. Work required shall include: Excavation; backfill; subgrade prep; sub-base; forming/casting/curing/stripping/finishing/testing concrete; thickened edges; reinforcing steel; embedments; armoring; penetrations; equipment pedestals; bollards; all labor; tools; equipment; submittals; testing; and incidentals necessary to complete the work as specified.

3. Unit of Measurement: Lump Sum

4. Measurement: Measurement shall be per lump sum or completed portion thereof as indicated in the Bid Form.

5. Payment: Payment shall be made at the contract unit price bid per lump sum or completed portion thereof as specified in the Bid Form.

T. **Bid Items 138: Rumble Grate Trough**

1. Description: This item consists of installing the new concrete curb and flatwork for the rumble grate trough.
2. Work required shall include: Excavation; backfill; subgrade prep; sub-base; forming/casting/curing/stripping/finishing/testing concrete; reinforcing steel; embedments; armoring; all labor; tools; equipment; submittals; testing; and incidentals necessary to complete the work as specified.
3. Unit of Measurement: Lump Sum
4. Measurement: Measurement shall be per lump sum or completed portion thereof as indicated in the Bid Form.
5. Payment: Payment shall be made at the contract unit price bid per lump sum or completed portion thereof as specified in the Bid Form.

U. **Bid Item 140: Compost/Biofilters Aeration Piping, Fittings, Dampers & Valves**

1. Description: This item shall consist of furnishing and installing all the HDPE, PVC and stainless steel aeration piping for the compost bays and biofilters.
2. Work required shall include: Excavation; bedding; backfill; all piping, fittings, valves, dampers, expansion joints; pipe supports; anchors; air filters; caps; plugs; ports; all labor; tools; equipment; submittals; testing; and incidentals necessary to complete the work as specified.
3. Unit of Measurement: Lump Sum
4. Measurement: Measurement shall be per lump sum or completed portion thereof as indicated in the Bid Form.
5. Payment: Payment shall be made at the contract unit price bid per lump sum or completed portion thereof as specified in the Bid Form.

V. **Bid Item 142: Compost & Biofilter Blowers**

1. Description: This item consists of furnishing and installing the twelve 7.5 hp compost blowers and the two 60 hp biofilter booster blowers.
2. Work required shall include: mounting and securing; local wiring; testing; troubleshooting; performance certification; protection and preservation of the utility; any necessary repairs/updates; all labor; tools; equipment; submittals; testing; and incidentals necessary to complete the work as specified.
3. Unit of Measurement: Lump Sum
4. Measurement: Measurement shall be per lump sum or completed portion thereof as indicated in the Bid Form.
5. Payment: Payment shall be made at the contract unit price bid per lump sum or completed portion thereof as specified in the Bid Form.

W. **Bid Items 144; 214: Electrical Feeds: MSB-A; MSB-6: Control Building; Compost/Biofilter Blowers; Runoff Lift Station; Condensate Lift Station; Well; Generator; Curing (Bid Item 214)**

1. Description: This item consists of furnishing and installing all electrical feed conductor and conduit: from MSB-A to MSB-6; MSB-6 to the Control Building and Runoff Lift Station; from the Control Building to compost & biofilter blowers, condensate lift station, well and generator – also for Schedule 2, work includes electrical feed to the Curing Control Shed and blowers.
2. Work required shall include: protection and preservation of the utility; excavation; bedding; backfill; surface restoration; conduit; conductor; tracer; junction boxes; penetrations; modification of existing electrical panels; additional breakers; fuses; entries; exterior breaker panels; all labor; tools; equipment; submittals; testing; and incidentals necessary to complete the work as specified.
3. Unit of Measurement: Lump Sum
4. Measurement: Measurement shall be per lump sum or completed portion thereof as indicated in the Bid Form.
5. Payment: Payment shall be made at the contract unit price bid per lump sum or completed portion thereof as specified in the Bid Form.

X. **Bid Item 146: Switch Gear/Breakers/Disconnects**

1. Description: This item consists of furnishing and installing all the required electrical switch gear, breakers and disconnects *not intrinsic to the compost control system panels*.
2. Work required shall include: switch gear/breaker panels/disconnects for the Runoff Lift Station; groundwater well; condensate lift station; testing, all labor, tools, equipment, materials, submittals and incidentals necessary to complete the work as specified.
3. Unit of Measurement: Lump Sum
4. Measurement: Measurement shall be per lump sum or completed portion thereof as indicated in the Bid Form.
5. Payment: Payment shall be made at the contract unit price bid per lump sum or completed portion thereof as specified in the Bid Form.

Y. **Bid Item 148: Relocate Existing Mixer Panels**

1. Description: This item consists of temporarily removing and replacing the two electrical panels for the existing compost mixer in order to accommodate other project work activities.
2. Work required shall include: disconnection, disassembly, re-placement, temporary power feed, re-connection, testing, troubleshooting, all labor, tools, equipment, materials, submittals and incidentals necessary to complete the work as specified.

3. Unit of Measurement: Lump Sum

4. Measurement: Measurement shall be per lump sum or completed portion thereof as indicated in the Bid Form.

5. Payment: Payment shall be made at the contract unit price bid per lump sum or completed portion thereof as specified in the Bid Form

Z. **Bid Item 150: Emergency Generator and Automatic Transfer Switch**

1. Description: This item consists of installing a complete 30kW diesel-powered emergency generator, controls and ATS adjacent to the new Compost Control Building.

2. Work required shall include: Furnishing, installing, integrating, testing, troubleshooting and warranting the entire emergency generator package. Included are: skid-mounted engine/generator assembly; automatic transfer switch; fuel & exhaust systems; vibration-dampening; 24-hr on-skid storage tank; fueling pipe extension & lockable cap; controls, integration into the SCADA system; submittals; O&M materials; spare parts and incidentals necessary to complete the generator as specified.

3. Unit of Measurement: Lump Sum.

4. Measurement: Measurement shall be per lump sum for the complete generator set installed as indicated in the Bid Form.

5. Payment: Payment shall be made at the contract unit price bid per lump sum as specified in the Bid Form. 50% of the Lump Sum amount can be requested when the generator package is delivered to the site and properly stored.

AA. **Bid Item 152: Control Building Circuitry/Lighting**

1. Description: This item shall consist of installing all the electrical circuitry and fixtures within the new Control Building – *exclusive of the compost control system, well controls and HVAC*.

2. Work required shall include: furnishing and installing: breakers; fuses; junction boxes; panels; transformers; lights; conduit; raceways; conductor; receptacles; all methods and labor; tools; equipment; submittals and incidentals necessary to complete the work as specified.

3. Unit of Measurement: Lump Sum.

4. Measurement: Measurement shall be per lump sum or completed portion thereof as indicated in the Bid Form.

5. Payment: Payment shall be made at the contract unit price bid per lump sum or completed portion thereof as specified in the Bid Form.

BB. **Bid Item 154**: **Control Building HVAC**

1. Description: This item consists of furnishing and installing all the heating, ventilation and air-conditioning (HVAC) equipment in the new Control Building.

2. Work required shall include: split system; exhaust fans; penetrations; mounting equipment; startup; troubleshooting; testing; all labor; tools; equipment; materials; and incidentals necessary to complete the work as specified.

3. Unit of Measurement: Lump Sum

4. Measurement: Measurement shall be per lump sum or completed portion thereof as indicated in the Bid Form.

5. Payment: Payment shall be made at the contract unit price bid per lump sum or completed portion thereof as specified in the Bid Form.

CC. **Bid Item 156**: **Compost Control System**

1. Description: This item consists of furnishing and installing a complete compost aeration control system.

2. Work required shall include: all primary devices; probes; sensors; disconnects; switch gear; drives; motor controls; PLC's; HMI; control panels; enclosures; conduit; conductor; fiber optics; cable; modbus gateway; antennae; communications; PC; all hardware; all software; software subscription; startup/troubleshooting; performance testing/reporting; all labor; tools; equipment; materials; and incidentals necessary to complete the work as specified.

3. Unit of Measurement: Lump Sum

4. Measurement: Measurement shall be per lump sum or completed portion thereof as indicated in the Bid Form.

5. Payment: Payment shall be made at the contract unit price bid per lump sum or completed portion thereof as specified in the Bid Form.

DD. **Bid Item 158: Project Sign**

1. Description: This item shall consist of providing a project sign for the work.

2. Work required includes: furnish/install the project sign and mounting hardware as indicated on Exhibit A of Specification Section 00 90 00, all labor, tools, equipment, materials, submittals and incidentals necessary to complete the work as specified.

3. Unit of Measurement: Lump sum

4. Measurement: Measurement shall be per lump sum for all signage installed as indicated in the Bid Form.

5. Payment: Payment shall be made at the contract unit price bid per lump sum or completed portion thereof as specified in the Bid Form.

6. Payment: Payment shall be made at the contract unit price bid per lump sum as specified in the Bid Form.

EE. **Bid Item 206**: **Curing Back Push Wall Footing & Equipment Pad**

1. Description: This item consists of installing the new Curing facility block wall footing and equipment slab.

2. Work required shall include: Excavation; backfill; subgrade prep; sub-base; forming/casting/curing/stripping/finishing/testing concrete; reinforcing steel; embedments; armoring; all labor; tools; equipment; submittals; testing; and incidentals necessary to complete the work as specified.

3. Unit of Measurement: Lump Sum

4. Measurement: Measurement shall be per lump sum or completed portion thereof as indicated in the Bid Form.

5. Payment: Payment shall be made at the contract unit price bid per lump sum or completed portion thereof as specified in the Bid Form.

FF. **Bid Item 208: Curing EcoBlock Walls**

1. Description: This item consists of removing approximately 265 concrete EcoBlocks (2'H; 3'W; 6'L - each weighing approx.. 5,400 lb) and 10 half blocks (2'H; 3'W; 3'L - each weighing approx.. 2,700 lb) from the south half of the existing "Transitional Composting Facility" and using them to build the back push wall and side walls for the new Curing facility.

2. Work required includes: picking/hauling/placing/stacking the *owner-supplied* EcoBlocks, all labor, tools, equipment, materials, submittals and incidentals necessary to complete the work as specified.

3. Unit of Measurement: Lump Sum

4. Measurement: Measurement shall be per lump sum or completed portion thereof as indicated in the Bid Form.

5. Payment: Payment shall be made at the contract unit price bid per lump sum or completed portion thereof as specified in the Bid Form.

GG. **Bid Item 210: Curing Control Shed**

1. Description: This item consists of furnishing and installing a new 8'x10' pre-manufactured shed on a concrete slab, to house the curing blower motor drives and controls.

2. Work required includes: Excavation; backfill; subgrade prep; sub-base; forming/casting/curing/stripping/finishing/testing concrete; reinforcing steel; setting and anchoring shed; all labor, tools, equipment, materials, submittals and incidentals necessary to complete the work as specified.

3. Unit of Measurement: Lump Sum

4. Measurement: Measurement shall be per lump sum or completed portion thereof as indicated in the Bid Form.

5. Payment: Payment shall be made at the contract unit price bid per lump sum or completed portion thereof as specified in the Bid Form

HH. **Bid Item 212: Curing Blowers, Aeration Piping, Fittings, Dampers**

1. Description: This item consists of furnishing and installing one new 40 HP curing blower, new VFD, aeration header piping; removing and re-installing

owner-supplied aeration piping, 40 hp blower (as per Sheets M-24 thru M-26), and VFD in the new Control Shed.

2. Work required shall include: furnish/install one new 40 hp blower, VFD, breakers, disconnects; removing one 40 hp blower, VFD, portion of the aeration piping/fittings from the Transitional Facility and re-installing at the Curing facility, all new aeration piping/fittings/dampers required; all labor, tools, equipment, materials, submittals and incidentals necessary to complete the work as specified.
3. Unit of Measurement: Lump Sum
4. Measurement: Measurement shall be per lump sum or completed portion thereof as indicated in the Bid Form.
5. Payment: Payment shall be made at the contract unit price bid per lump sum or completed portion thereof as specified in the Bid Form.

II. **Bid Item 216: Curing Control Shed Circuitry/Lighting**

1. Description: This item shall consist of installing all the electrical circuitry, ventilation and fixtures within the new curing Control shed.
2. Work required shall include: furnishing and installing: breakers; fuses; junction boxes; panels; transformers; lights; conduit; raceways; conductor; receptacles; exhaust fan; electric heater; all methods and labor; tools; equipment; submittals and incidentals necessary to complete the work as specified.
3. Unit of Measurement: Lump Sum.
4. Measurement: Measurement shall be per lump sum or completed portion thereof as indicated in the Bid Form.
5. Payment: Payment shall be made at the contract unit price bid per lump sum or completed portion thereof as specified in the Bid Form

END OF SECTION 01 27 00

SECTION 01 29 00
PAYMENT PROCEDURES

PART 1 - GENERAL

1.01 SUMMARY

A. Section includes:

1. Format and Preparation of Applications.
2. Schedule of Values
3. Submittal Procedures.
4. Substantiating Data.

B. Related Sections include:

1. Section 00 52 00 – Agreement.
2. Section 00 72 00 – General Conditions.
3. Section 01 26 00 – Contract Modification Procedures.
4. Section 01 33 00 – Submittal Procedures.
5. Section 01 77 00 – Closeout Procedures.

1.02 FORMAT AND PREPARATION OF APPLICATIONS

A. Utilize: Engineers Joint Contract Document Committee (EJCDC) Application for Payment Form (C-620, 2013 or 2018 Edition).

B. Preparation

1. Present required information in typewritten form.
2. Execute certification by signature of authorized officer.
3. Use data from approved Schedule of Values. Provide dollar value in each column for each line item for portion of work performed and for stored Products.
4. List each authorized Change Order as an extension on Continuation Sheet, listing Change Order number and dollar amount as for an original item of Work.
5. Prepare Application for Final Payment as specified in Section 01 77 00.

1.03 SCHEDULE OF VALUES

A. Submit:

1. Typed schedule of values in format similar to EJCDC Application for Payment (C-620, 2013 or 2018 Edition).
2. In duplicate within 15 days after date of Owner-Contractor Agreement.
3. See Article 2.03.A.3 of the General Conditions.

B. Format:

1. Utilize the Table of Contents within Contract Documents.
2. Identify line items corresponding with number and title of Specification Section.
3. Provide sufficient information regarding means of measurement of quantities or progress completed for verification by Engineer.

C. Identify site mobilization including bonds and insurance separately. Payment for mobilization will be based on the percentage of the original contract amount in place as described in the following schedule:

Percentage of Original Contract Amount In-Place	Percentage of Lump Sum Price for Mobilization Earned
5	20
10	50
25	60
65	75
90	90
100	100

D. Payment: Payment for MOBILIZATON will be made on the percentage of the contract unit price bid per lump sum as indicated in the Bid Form.

1. Include within each line item a direct proportional amount of Contractor's overhead and profit.

E. Revise Schedule of Values to list approved Change Orders, and submit with each Application for Payment.

1.04 PROGRESS PAYMENTS

A. See 15.01 of the General conditions (S.C.)

1.05 SUBMITTAL PROCEDURES

A. Submittals

1. One electronic copy of each Application for Payment **bearing the signature of a responsible representative of the CONTRACTOR;**
2. Updated construction schedule with each Application for Payment;
3. Subcontractor and significant supplier lien releases starting with 2nd pay application;
4. Certified payrolls demonstrating compliance with Davis-Bacon or Montana Prevailing wage rates;
5. Payment Periods: As stipulated in the Agreement.
6. Submit with transmittal letter as specified for Submittals in Section 01 33 00.
7. Administrative actions which must precede or coincide with submittal of final application for payment include:
   a. Submit lien waivers, warranties and bonds, and project record documents with final application for payment.

b. Completion of all work not included in substantial completion as defined in General and Supplementary Conditions.

c. Completion of project closeout procedures as indicated in Section 01 77 00.

d. Removal of temporary facilities and services.

e. Removal of surplus materials, rubbish, or similar elements.

f. Final cleaning.

g. Transmittal of project construction record documents to Owner and Engineer.

h. Consent of surety for final payment.

1.06 SUBSTANTIATING DATA

A. When Engineer requires substantiating information, submit data justifying dollar amounts in question.

B. Provide one (1) copy of data with cover letter for each copy of submittal. Show application number and date, and line item by number and description.

C. Provide copies of invoice(s) for payment of materials stored on-site *and complete/update the pay application worksheet showing the quantity of stored materials at the end of each pay period*. Payment will not be made for materials that are not stored on-site or within a bonded warehouse that has been approved by Engineer and Owner.

D. Contractor shall supply substantiating information in compliance with federal and state requirements for monthly utilization reports and weekly prevailing wage and labor rates for laborers on-site.

PART 2 - PRODUCTS (Not Used)

PART 3 - EXECUTION (Not Used)

END OF SECTION 01 29 00

SECTION 01 31 00
PROJECT MANAGEMENT AND COORDINATION

PART 1 - GENERAL

1.01 RELATED DOCUMENTS

A. Drawings and Special Provisions of the Contract, including General and Supplementary Conditions and other Division 1 Specifications Sections, apply to this section.

1.02 SUMMARY

A. This Section specifies administrative provisions for coordination construction operations on Project including, but not limited to, the following:

1. Preconstruction Conference.
2. General project coordination procedures.
3. Conservation.
4. Coordination Drawings.
5. Administrative and supervisory personnel.
6. Project meetings.

B. Related Sections include the following:

1. Division 1 Section 01 70 00 - Execution Requirements - for procedure for coordinating general installation and field-engineering service, including establishment of benchmarks and control points.
2. Division 1 Section 01 77 00 - Closeout Procedures- for coordinating Contract Closeout.
3. Division 1 Section 01 32 00 - Construction Progress Documentation - for administrative requirements governing preparation and submittal of Contractor's Construction Schedule and Submittals Schedule.

1.03 COORDINATION

A. *In order to preserve Garden City Compost's ability to conduct its operations during construction of the PROJECT, access to the current Transitional Facility will be maintained at all times and the Curing portion of the PROJECT will be the last operation constructed*;

B. Coordination: Coordinate construction operations included in various Sections of the Specifications to ensure efficient and orderly installation of each part of the Work. Coordinate construction operations, included in different specification divisions and sections, that depend on each other for proper installation, connection, and operation.

1. Schedule construction operations in sequence required to obtain the best results where installation of one part of the Work depends on installation of other components, before or after its own installation.

2. Coordinate installation of different components with other contractors to ensure maximum accessibility for required maintenance, service, and repair.

3. Make adequate provisions to accommodate items scheduled for later installation.

C. If necessary, prepare memoranda for distribution to each party involved, outlining special procedures required for coordination. Include such items as required notices, reports, and list of attendees at meetings.

1. Prepare similar memoranda for OWNER, Engineer and separate contractors if coordination of their work is required.

D. Administrative Procedures: Coordinate scheduling and timing of required administrative procedures with other construction activities and activities of other contractors to avoid conflicts and to ensure orderly progress of the Work. Such administrative activities include, but are not limited to, the following:

1. Preparation of Contractor's Construction Schedule.

2. Installation and removal of temporary facilities and controls.

3. Delivery and processing of submittals.

4. Preconstruction conference;

5. Progress meetings.

6. Project closeout activities.

E. Conservation: Coordinate construction activities to ensure that operations are carried out with consideration given to conservation of energy, water and minerals.

1. Salvage materials and equipment involved in performance of, but not actually incorporated into, the Work.

a. All materials salvaged in the project shall become the property of the OWNER unless otherwise specified. Material identified as salvage shall be delivered by the Contractor to a suitable storage location as directed by the Engineer.

1.04 SUBMITTALS

A. Staff Names: At the preconstruction conference submit a list of principal staff assignments, including superintendent and other personnel in attendance at Project site. Identify individuals and their duties and responsibilities; list addresses, email and telephone numbers, including home, office and mobile telephone numbers by which Contractor's representatives can be reached immediately. Provide names, addresses, and mobile telephone numbers of individuals assigned as standbys in the absence of individuals assigned to Project.

1. Post copies of the contact list in temporary field office and by each temporary telephone.

1.05 ADMINISTRATIVE AND SUPERVISORY PERSONNEL

A. In addition to Project superintendent, provide other administrative and supervisory

personnel as required for proper performance of the Work.

1.06 PROJECT MEETINGS

A. General: Schedule and conduct regular meetings and conferences at Project site,

1. Attendees: Inform all stake-holding participants and others involved, and individuals whose presence is required, of date, time and location of each meeting. Notify OWNER and Engineer of scheduled meeting dates and times.

2. Agenda: Prepare the meeting agenda. Distribute the agenda to all invited attendees.

3. Minutes: Record significant discussions and agreements achieved. Distribute the meeting minutes to everyone concerned, including OWNER and Engineer, within three days of the meeting.

B. Preconstruction Conference: Engineer and OWNER will schedule a preconstruction conference at the Project site or other convenient location. The meeting shall be facilitated and documented by the Engineer who shall review work responsibilities and personnel assignments.

1. Attendees: Authorized representatives of OWNER, Engineer, and their consultants; Contractor and his superintendent; major subcontractors; manufacturers; suppliers; and other concerned parties shall attend the conference. All participants at the conference shall be familiar with the Project and authorized to conclude matters relating to the Work.

2. Contractor shall bring a written, detailed construction schedule to the preconstruction conference.

3. Agenda: The OWNER, Engineer and Contractor shall discuss items of significance that could affect progress, including the following:

a. Tentative construction schedule.
b. Phasing.
c. Critical work sequencing.
d. Designation of responsible personnel.
e. Subcontractor list.
f. Testing Responsibilities.
g. Traffic Control.
h. Procedures for processing field decisions and Change Orders.
i. Procedures for processing Applications for Payment.
j. Distribution of the Contract Documents.
k. Submittal procedures.
l. Preparation of Record Documents.
m. Use of the premises.
n. Responsibility for temporary facilities and controls.
o. Office, work, and storage areas.
p. Delivery and storage of materials and equipment.
q. Security.

r. Progress and restoration.
s. Working hours.
t. Applicable MCEP, SRF, ARPA, EPA and DNRC requirements.
u. Specific County regulations.
v. Montana DEQ requirements.
w. Coordination with private landowners.

C. Progress Meetings: Conduct progress meetings at regular intervals. Coordinate dates of meetings with preparation of payment requests.

1. Attendees: In addition to representatives of the OWNER and Engineer, each contractor, subcontractor, supplier, and other entity concerned with current progress or involved in planning, coordination, or performance of future activities shall be represented at these meetings. All participants at the conference shall be familiar with Project and authorized to conclude matters relating to the Work.

2. Agenda: Review and correct or approve minutes of previous progress meetings. Review other items of significance that could affect progress. Include topics for discussion as appropriate to status of Project.

a. Contractor's Construction Schedule: Review progress since the last meeting. Determine whether each activity is on time, ahead of schedule, or behind schedule, in relation to Contractor's Construction Schedule. Determine how construction behind schedule will be expedited; secure commitments from parties involved to do so. Discuss whether schedule revisions are required to ensure that current and subsequent activities will be completed within the Contract Time.
b. Review present and future needs of each entity present, including the following:
i. Interface requirements.
ii. Sequence of operations.
iii. *Maintenance of treatment capacity*.
iv. Status of submittals.
v. Deliveries.
vi. Off-site fabrications.
vii. Access.
viii. Site utilization.
ix. Temporary facilities and controls.
x. Work hours.
xi. Hazards and risks.
xii. Progress, restoration and cleanup.
xiii. Quality and work standards.
xiv. Change Orders.
xv. Documentation of information for payment requests.

3. Reporting: Distribute minutes of the meeting to each party present and to parties who should have been present. Include a brief summary, in narrative form, of progress since the previous meeting and report.

a. Schedule Updating: Revise Contractor's construction Schedule after each progress meeting where revisions to the schedule have been made or recognized. Issue revised schedule concurrently with the report of each meeting.

PART 2 - PRODUCTS (Not Used)

PART 3 - EXECUTION (Not Used)

END OF SECTION 01 31 00

SECTION 01 32 00
CONSTRUCTION PROGRESS DOCUMENTATION

PART 1 - GENERAL

1.01 RELATED DOCUMENTS

A. Drawings and Special Provisions of the Contract, including General and Supplementary Conditions and other Division 1 Specifications Sections, apply to this Section.

1.02 SUMMARY

A. This Section includes administrative and procedural requirements for documenting the progress of construction during performance of the Work, including, but not limited to, the following:

1. Preliminary Construction Schedule.
2. Contractor's Construction Schedule.
3. Submittals Schedule.
4. Daily construction reports.

B. Related Sections include the following:

1. Division 1 Section 01 29 00 - Payment Procedures - for submitting the Schedule of Values.
2. Division 1 Section 01 31 00 - Project Management & Coordination - for submitting and distributing meeting and conference minutes.
3. Division 1 Section 01 33 00 – Submittals - for submitting schedules and reports.
4. Division 1 Section 01 40 00 - Quality Requirements - for submitting a schedule of tests and inspections.
5. Division 1 Section 01 77 00 – Closeout Procedures - for submitting digital photographic documentation as part of the Project Record Documents at Project closeout.

1.03 DEFINITIONS

A. Activity: A discrete part of a project that can be identified for planning, scheduling, monitoring, and controlling the construction project. Activities included in a construction schedule consume time and resources.

1. Critical activities are activities on the critical path. They must start and finish on the planned start and finish times.
2. Predecessor activity is an activity that must be completed before a given activity can be started.

B. Event: The starting or ending point of an activity.

C. Float: The measure of leeway in starting and completing an activity.

1. Float time is not for the exclusive use or benefit of either Owner or Contractor, but is a jointly owned, expiring Project resource available to both parties as needed to meet schedule milestones and Contract completion date.
2. Free float is the amount of time an activity can be delayed without adversely affecting the early start of the following activity.
3. Total float is the measure of leeway in starting or completing an activity without adversely affecting the planned Project completion date.

D. Fragnet: A partial or fragmentary network that breaks down activities into smaller activities for greater detail.

E. Milestone: A key or critical point in time for reference or measurement.

F. Network Diagram: A graphic diagram of a network schedule, showing activities and activity relationships.

1.04 SUBMITTALS

A. Qualification Data: For firms and persons specified in Section 01 40 00 – Quality Requirements - to demonstrate their capabilities and experience. Include lists of completed project names and addressed, names and address of Engineers and Owners, and other information specified.

B. Preliminary Construction Schedule: Submit two printed copies: one a single sheet of reproducible media, and one print.

C. Contractor's Construction Schedule: Submit two printed copies of initial schedule, one reproducible print and one a blue- or black-line print, large enough to show entire schedule for entire construction period.

D. Daily Construction Reports: Submit two copies at monthly intervals.

1.05 COORDINATION

A. Coordinate preparation and processing of schedules and reports with performance of construction activities and with scheduling and reporting of separate contractors.

B. Coordinate Contractor's Construction Schedule, list of subcontracts, Submittals Schedule, progress reports, payment requests, and other required schedules and reports.

1. Secure time commitments for performing critical elements of the Work from parties involved.
2. Coordinate each construction activity in the network with other activities and schedule them in proper sequence.

PART 2 - PRODUCTS

2.01 CONTRACTOR'S CONSTRUCTION SCHEDULE, GENERAL

A. Time Frame: Extend schedule from date established for the Notice to Proceed to date of Substantial Completion.

1. Contract completion date shall not be changed by submission of a schedule that shows an earlier or later completion date. Contract time can only be authorized through the formal Change Order process. See Section 01 26 00 and Standard General Conditions Article 9.07.
2. Procurement Activities: Include procurement process activities for long lead items and major items, requiring a cycle of more than 60 days, as separate activities in schedule. Procurement cycle activities include, but are not limited to, submittals, approvals, purchasing, fabrications, and delivery.
3. Submittal Review Time: Include review and resubmittal times indicated in Division 1 Section "Submittal Procedure" in schedule. Coordinate submittal review times in contractor's Construction Schedule with Submittals Schedule.
4. Startup and Testing Time: Include time for startup and testing.
5. Substantial Completion: Indicate completion in advance of date established for Substantial Completion, and allow time for Engineer's administrative procedures necessary for certification of Substantial Completion.

B. Constraints: Include constraints and work restrictions indicated in the Contract Documents and as follows in schedule, and show how the sequence of the Work is affected.

C. Milestones: Include milestones indicated in the Contract Documents in schedule, including, but not limited to, the Notice to Proceed, Substantial Completion, and Final completion.

D. Contract Modifications: for each proposed contract modification and concurrent with its submission, prepare a time-impact analysis using fragnets to demonstrate the effect of the proposed change on the overall project schedule.

2.02 PRELIMINARY CONSTRUCTION SCHEDULE

A. Bar-Chart Schedule: Submit preliminary horizontal bar-chart-type construction schedule at the preconstruction conference.

B. Preparation: Indicate each significant construction activity separately. Identify first workday of each week with a continuous vertical line. Outline significant construction activities for construction.

2.03 REPORTS

A. Daily Construction Reports: Engineer's Resident Project Representative (RPR) and the Contractor Quality Control (CQC) representative shall prepare **daily** construction reports recording the following information concerning events at Project site:

1. List of subcontractors at Project site.
2. List of separate contractors at Project site.
3. Approximate count of personnel at Project site.
4. High and low temperatures and general weather conditions.

5. Accidents.
6. Meetings and significant decisions.
7. Developing disputes.
8. Unusual events.
9. Stoppages, delays, shortages, and losses.
10. Meter readings and similar recordings.
11. Emergency procedures.
12. Orders and requests of authorities having jurisdiction.
13. Change Orders received and implemented.
14. Work Change Directives received.
15. Services connected and disconnected.
16. Equipment or system tests and startups.
17. Partial Completions and occupancies.
18. Substantial Completion authorized.

PART 3 - EXECUTION

3.01 CONTRACTOR'S CONSTRUCTION SCHEDULE UPDATING

A. At monthly intervals, update schedule to reflect actual construction progress and activities. Issue schedule one week before each regularly scheduled progress meeting.

1. Revise schedule immediately after each meeting or other activity where revisions have been recognized or made. Issue updated schedule concurrently with the report of each such meeting.
2. Include a report with updated schedule that indicates every change, including, but not limited to, changes in logic, order, actual starts and finishes, and activity durations.
3. As the Work progresses, indicate actual completion percentage for each activity.

3.02 CONTRACTOR'S CONSTRUCTION SCHEDULE DISTRIBUTION

A. Distribute copies of approved schedule to Engineer, Owner, separate testing and inspecting agencies, and other parties identified by Contractor with a need-to-know schedule responsibility.

1. Post copies in temporary field offices.
2. When revisions are made, distribute updated schedules to the same parties and post in the same locations. Delete parties from distribution when they have completed their assigned portion of the Work and are no longer involved in performance of construction activities.

END OF SECTION 01 32 00

SECTION 01 33 00
SUBMITTAL PROCEDURES

PART 1 - GENERAL

1.01 RELATED DOCUMENTS

A. Drawings and Special Provisions of the Contract, including General and Supplementary Conditions and other Division 1 Specifications Sections, apply to this Section.

1.02 SUMMARY

A. This Section includes administrative and procedural requirements for submitting shop drawings, Product Data, and other miscellaneous submittals.

1.03 DEFINITIONS

A. Action Submittals: Written and graphic information that requires Engineer's responsive action.

B. Informational Submittals: Written information that does not require Engineer's approval. Submittals may be rejected for not complying with requirements.

1.04 SUBMITTAL PROCEDURES

A. General: Electronic copies of CAD Drawings of the Contract Drawings will be provided by Engineer for Seller's use in preparing submittals.

B. Coordination: Coordinate preparation and processing of submittals with performance of construction activities.

1. Coordinate each submittal with fabrication, purchasing, testing, deliver, other submittals, and related activities that require sequential activity.

2. Coordinate transmittal of different types of submittals for related parts of the Work so processing will not be delayed because of need to review submittals concurrently for coordination.

a. Engineer reserves the right to withhold action on a submittal requiring coordination with other submittals until related submittals are received.

C. Submittals Schedule: Comply with requirements in Section 01 32 00 - Construction Progress Documentation - for list of submittals and time requirements for scheduled performance of related construction activities.

D. Direct Transmittal from Prime Seller: Engineer will not accept submittals from anyone but the Prime Seller – authorized by the Contractor's official signature.

E. Processing Time: Allow enough time for submittal review, including time for resubmittals, as follows. Time for review shall commence on Engineer's receipt of submittal.

1. Initial Review: Allow 15 days for initial review of each submittal. Allow additional time if processing must be delayed to permit coordination with Engineer's review of

subsequent submittals. Engineer will advise Seller when a submittal being processed must be delayed to permit coordination with subsequent submittals. Engineer will advise Seller when a submittal being processed must be delayed for coordination.

2. Allow 15 days for processing each resubmittal.

3. No extension of the Contract Time will be authorized because of failure to transmit submittals enough in advance of the Work to permit review and processing.

F. Identification: Place a permanent label or title block on each submittal for identification.

1. Indicate name of firm or entity that prepared each submittal on label or title block.

2. Provide a space approximately 4 by 5 inches on label or beside title block to record Prime Contractor's (Sellers's) review and approval markings and action taken by Engineer.

3. Include the following information on label for processing and recording action taken:

a. Project name.
b. Date.
c. Name and address of Engineer.
d. Name and address of Seller.
e. Name and address of subcontractor.
f. Name and address of supplier.
g. Name of manufacturer.
h. Unique identifier, including revision number.
i. Number and title of appropriate Specification Section.

G. Deviations: Highlight, encircle, or otherwise identify deviations from the Contract Documents on submittals.

H. Additional Copies: Unless additional copies are required for final submittal, and unless Engineer observes noncompliance with provisions of the Contract Documents, initial submittal may serve as final submittal.

I. Transmittal: Package each submittal individually and appropriately for transmittal and handling. Transmit each submittal using a transmittal form. Engineer will discard submittals received from sources other than Seller.

1. On an attached separate sheet, prepared on Seller's letterhead, record relevant information, requests for data, revisions other than those requested by Engineer on previous submittal, and *deviations from requirement* of the Contract Documents, including minor variations and limitations. Include the same label information as the related submittal.

2. Include Seller's certification stating that information submitted complies with requirements of the Contract Documents.

3. Transmittal Form: Provide locations on form for the following information:

a. Project name.

b. Date.
c. Destination (To:).
d. Source (From:).
e. Names of subcontractor, manufacturer, and supplier.
f. Category and type of submittal.
g. Submittal purpose and description.
h. Submittal and transmittal distribution record.
i. Remarks.
j. Signature of transmitter.

J. Distribution: Furnish copies of submittals to manufacturers, subcontractors, suppliers, fabricators, installers, authorities having jurisdiction, and others as necessary for performance of construction activities. Show distribution on transmittal forms.

K. Use for Construction: Use only final submittals with mark indicating action taken by Engineer in connection with construction.

PART 2 - PRODUCTS

2.01 ACTION SUBMITTALS

A. General: Prepare and submit Action Submittals required by individual Specification Sections.

1. Number of Copies: Submit one electronic copy (*pre-approved by the Contractor* and bearing the Contractor's legal signature) of each action submittal, unless otherwise indicated. Engineer will return one stamped approved electronic copy. Contractor will mark up and retain as a Project Record Document.

B. Product Data: Collect information into a single submittal for each element of construction and type of product or equipment.

1. If information must be specially prepared for submittal because standard printed data are not suitable for use, submit as Shop Drawings, not as Product Data.

2. Mark each copy of each submittal to show which products and options are applicable.

3. Include the following information, as applicable:

a. Manufacturer's written recommendations.

b. Manufacturer's product specifications.

c. Manufacturer's installation instructions.

d. Standard color charts.

e. Manufacturer's catalog cuts.

f. Wiring diagrams showing factory-installed wiring.

g. Printed performance curves.

h. Operational range diagrams.

i. Mill reports.

j. Standard product operation and maintenance manuals.

k. Compliance with recognized trade association standards.

l. Compliance with recognized testing agency standards.

m. Application of testing agency labels and seals.

n. Notation of coordination requirements.

C. Shop Drawings: Prepare Project-specific information, drawn accurately to scale. Do not base Shop Drawings on reproductions of the Contract Documents or standard printed data.

1. Preparation: Include the following information, as applicable:

a. Dimensions.

b. Identification of products.

c. Fabrication and installation drawings.

d. Roughing-in and setting diagrams.

e. Wiring diagrams showing field-installed wiring, including power, signal, and control wiring.

f. Shopwork manufacturing instructions.

g. Templates and patterns.

h. Schedules.

i. Design calculations.

j. Compliance with specified standards.

k. Notation of coordination requirements.

l. Notation of dimensions established by field measurement.

2. Wiring Diagrams: Differentiate between manufacturer-installed and field-installed wiring.

3. Sheet Size: Except for templates, patterns, and similar full-size drawings, submit Shop Drawings on sheets at least 8-1/2 inches by 11 inches but no larger than 30 by 40 inches.

D. Coordination Drawings: Comply with requirements in Section 01 31 00 - Project Management and Coordination.

E. Contractor's Construction Schedule: Comply with requirements in Section 01 32 00 - Construction Progress Documentation for Construction Manager's action.

F. Submittals Schedule: Comply with requirements in Section 01 32 00 - Construction Progress Documentation."

G. Application for Payment: Comply with requirements in Section 01 29 00 - Payment Procedures.

H. Subcontract List: Prepare a written summary identifying individuals or firms proposed for each portion of the Work, including those who are to furnish products or equipment fabricated to a special design. Include the following information in tabular form:

1. Name, address, and telephone number of entity performing subcontract or supplying products.

2. Number and title of related Specifications Section(s) covered by subcontract.

3. Drawing number and detail references, as appropriate, covered by subcontract.

2.02 INFORMATIONAL SUBMITTALS

A. General: Prepare and submit Informational Submittals required by other Specifications Sections.

1. Number of Copies: submit two (2) hard copies and one electronic copy of each informational submittal, unless otherwise indicated. Engineer will not return copies.

2. Certificates and Certifications: Provide a notarized statement that includes signature of entity responsible for preparing certification. Certificates and certifications shall be signed by an officer or other individual authorized to sign documents on behalf of that entity.

3. Test and Inspection Reports: Comply with requirements in 01 40 00 – Quality Requirements.

B. Contractor's Construction Schedule: Comply with requirements in Section 01 32 00 - Construction Progress Documentation.

C. Qualification Data: Prepare written information that demonstrates capabilities and experience of firm or person. Include lists of completed projects with project names and addressed, names and addresses of Engineers and Owners, and other information specified.

D. Product Certificates: Prepare written statements on manufacturer's letterhead certifying that product complies with requirements.

E. Installer Certificates: Prepare written statements on manufacturer's letterhead certifying that Installer complies with requirements and, where required, is authorized for this specific Project.

F. Manufacturer Certificates: Prepare written statements on manufacturer's letterhead certifying that manufacturer complies with requirements. Include evidence of manufacturing experience where required.

G. Material Certificates: Prepare written statements on manufacturer's letterhead certifying that material complies with requirements.

H. Material Test Reports: Prepare reports written by a qualified testing agency, on testing agency's standard form, indicating and interpreting test results of material for compliance with requirements.

I. Preconstruction Test Reports: Prepare reports written by a qualified testing agency, on testing agency's standard form, indicating and interpreting results of tests performed before installation of product, for compliance with performance requirements.

J. Compatibility Test Reports: Prepare reports written by a qualified testing agency, on testing agency's standard form, indicating and interpreting results of compatibility tests performed before installation of product.

K. Field Test Reports: Prepare reports written by a qualified testing agency, on testing agency's standard form, indicating and interpreting results of field tests performed either during installation of product or after product is installed in its final location, for compliance with requirements.

L. Product Test Reports: Prepare written reports indicating current product produced by manufacturer complies with requirements. Base reports on evaluation of tests performed by manufacturer and witnessed by a qualified testing agency, or on comprehensive tests performed by a qualified testing agency.

M. Maintenance Data: Prepare written and graphic instructions and procedure for operation and normal maintenance of products and equipment. Comply with requirements in Section 01 77 00 - Closeout Procedures.

N. Design Data: Prepare written and graphic information, including, but not limited to, performance and design criteria, list of applicable codes and regulations, and calculations. Include list of assumptions and other performance and design criteria and a summary of loads. Include load diagrams if applicable. Provide name and version of software, if any, used for calculation. Include page numbers.

O. Manufacturer's Instructions: Prepare written or published information that documents manufacturer's recommendations, guideline, and procedures for installing or operating a product or equipment. Include name of product and name, address, and telephone number of manufacturer. Include the following, as applicable:

   1. Preparation of substrates.
   2. Required substrate tolerance.
   3. Sequence of installation or erection.
   4. Required installation tolerance.
   5. Required adjustments.
   6. Recommendations for cleaning and protection.

P. Manufacturer's Field Reports: Prepare written information documenting factory-authorized service representative's tests and inspections. Include the following, as applicable:

1. Name, address, and telephone number of factory-authorized service representative making report.
2. Statement on condition of substrates and their acceptability for installation of product.
3. Statement that products at Project site comply with requirements.
4. Summary of installation procedures being followed, whether they comply with requirements and, if not, what corrective action was taken.
5. Results of operational and other tests and a statement of whether observed performance complies with requirements.
6. Statement whether conditions, products and installation will affect warranty.
7. Other required items indicated in individual Specification Sections.

Q. Insurance Certificates and Bonds: Prepare written information indicating current status of insurance and bonding coverage. Include name of entity covered by insurance or bond, limits of coverage, amount of deductibles, if any, and term of the coverage.

R. Material Safety Data Sheets: Submit information directly to Owner. If submitted to Engineer, Engineer will not review this information but will return it with not action taken.

PART 3 - EXECUTION

3.01 CONTRACTOR'S REVIEW

A. *Contractor shall review each submittal and check for compliance with the Contract Documents.* Note corrections and field dimensions. ***Mark with approval stamp before submitting to Engineer.***

B. Approval Stamp: Stamp each submittal with a uniform, approval stamp. Include Project name and location, submittal number, Specification Section title and number, name of reviewer, date of Seller's approval, and statement certifying that submittal has been reviewed, checked, and approved for compliance with the Contract Documents.

3.02 ENGINEER'S ACTION

A. General: ***Engineer will not review submittals that do not bear Seller's approval stamp and will return them without action***.

B. Action Submittals: Engineer will review each submittal, make marks to indicate corrections or modifications required, and return it. Engineer will stamp each submittal with an action stamp and will mark stamp appropriately to indicated action taken, as follows:

1. No Exceptions Noted.
2. Exceptions Noted
3. Returned for Correction.

C. Informational Submittals: Engineer will review each submittal and will not return it, or will reject and return it if it does not comply with requirements. Engineer will forward each submittal to appropriate party.

D. Submittals not required by the Contract Documents will not be reviewed and may be discarded.

END OF SECTION 01 33 00

SECTION 01 40 00
QUALITY REQUIREMENTS

PART 1 - GENERAL

1.01 RELATED DOCUMENTS

A. Drawings and Special Provisions of the Contract, including General and Supplementary Conditions and other Division 1 Specifications Sections, apply to this Section.

1.02 SUMMARY

A. This Section includes administrative and procedural requirements for quality assurance and quality control.

B. Testing and inspecting services are required to verify compliance with requirements specified or indicated. These services do not relieve Contractor and/or Equipment Supplier of responsibility for compliance with the Contract Document requirements.

1. Specific quality-control requirements for individual construction activities are specified in the Sections that specify those activities. Requirements in those Sections may also cover production of standard products.

2. Specified tests, inspections, and related actions do not limit Contractor's quality-control procedures that facilitate compliance with the Contract Documents requirements.

3. Requirements for Contractor/Supplier to provide quality-control services required by Engineer, Owner, or authorities having jurisdiction are not limited by provisions of this Section.

C. Related Sections include the following:

1. Section 01 32 00 - Construction Progress Documentation - for developing a schedule of required tests and inspections.

2. Divisions 2 through 44 Technical Sections for specific test and inspection requirements.

1.03 DEFINITIONS

A. Quality-Assurance Services: Activities, actions, and procedures performed before and during execution of the Work to guard against defects and deficiencies and ensure that proposed construction complies with requirements.

B. Quality-Control Services: Tests, inspections, procedures, and related actions during and after execution of the Work to evaluate that completed construction complies with requirements. Services do not include contract enforcement activities performed by Engineer.

C. Testing Agency: An entity engaged to perform specific tests, inspections, or both. Testing laboratory shall mean the same as testing agency.

1.04 SUBMITTALS

A. Qualification Data: For testing agencies specified in Section 01 40 00 - Quality Requirements - to demonstrate their capabilities and experience. Include proof of qualifications in the form of a recent report on the inspection of the testing agency by a recognized authority.

B. Reports: Prepare and submit certified written reports that include the following:

1. Date of issue.
2. Project title and number.
3. Name, address, and telephone number of testing agency.
4. Dates and locations of samples and tests or inspections.
5. Names of individuals making tests and inspections.
6. Description of the Work and test and inspection method.
7. Identification of product and Specification Section.
8. Complete test or inspection data.
9. Test and inspection results and an interpretation of test results.
10. Ambient conditions at time of sample taking and testing and inspecting.
11. Comments or professional opinion on whether tested or inspected Work complies with the Contract Document requirements.
12. Name and signature of laboratory inspector.
13. Recommendations on retesting and re-inspecting.

C. Permits, Licenses, and Certificates: For Owner's records, submit copies of permits, licenses, certifications, inspection reports, releases, jurisdictional settlements, notices, receipts for fee payments, judgments, correspondence, records, and similar documents, established for compliance with standards and regulations bearing on performance of the Work.

1.05 QUALITY ASSURANCE

A. Fabricator Qualifications: A firm experienced in producing products similar to those indicated for this Project and with a record of successful in-service performance, as well as sufficient production capacity to produce required units.

B. Factory-Authorized Service Representative Qualifications: An authorized representative of manufacturer who is trained and approved by manufacturer to inspect installation of manufacturer's products that are similar in material, design, and extent to those indicated for this Project.

C. Installer Qualifications: A firm or individual experienced in installing, erecting, or assembling work similar in material, design, and extent to that indicated for this Project, whose work has resulted in construction with a record of successful in-service performance.

D. Manufacturer Qualifications: A firm experienced in manufacturing products or systems similar to those indicated for this Project and with a record of successful in-service performance.

E. Testing Agency Qualifications: An agency with the experience and capability to conduct testing and inspecting indicated, as documented by ASTM E 548, and that specializes in those types of tests and inspections to be performed.

F. Preconstruction Testing: Testing agency shall perform preconstruction testing for compliance with specified requirements for performance and test methods.

1. Contractor responsibilities include the following:

a. Provide test specimens and assemblies representative of proposed materials and construction. Provide sizes and configurations of assemblies to adequately demonstrate capability of product to comply with performance requirements.

b. Submit specimens in a timely manner with sufficient time for testing and analyzing results to prevent delaying the Work.

2. Testing Agency Responsibilities: Submit a certified written report of each test, inspection and similar quality-assurance service to Engineer, with copy to Contractor. Interpret tests and inspections and state in each report whether tested and inspected work complies with or deviates from the Contract Documents.

1.06 QUALITY CONTROL

A. Owner Responsibilities: Where quality-control services are *specifically indicated* as Owner's responsibility, Owner will engage a qualified testing agency or Engineer to perform these services.

1. Owner will furnish Contractor with names, addresses, and telephone numbers of testing agencies engaged and a description of the types of testing and inspecting they are engaged to perform.

2. Costs for retesting and re-inspecting construction that replaces or is necessitated by work that failed to comply with the Contract Documents will be charged to the Contractor.

B. Contractor Responsibilities: Unless otherwise indicated, *all quality-control services* specified and required by authorities having jurisdiction.

1. Where services are indicated as Contractor's responsibility, engage a qualified testing agency to perform these quality-control services.

a. Contractor shall not employ the same entity engaged by Owner, unless agreed to in writing by Owner.

2. Notify testing agencies at least 24 hours in advance of time when Work that requires testing or inspecting will be performed.

3. Where quality-control services are Contractor's responsibility, submit a certified written report, in duplicate, of each quality-control service.

4. Testing and inspecting requested by Contractor and not required by the Contract Documents are Contractor's responsibility.
5. Submit additional copies of each written report directly to authorities having jurisdiction, when they so direct.
6. Manufacturer's Field Services: Where indicated, engage a factory-authorized service representative to inspect field-assembled components and equipment installation, including service connections. Report results in writing. Generally, manufacturers' field services will be necessary for installation/testing of the following project elements:
   a. Runoff lift station
   b. Control system
   c. Well pump & pressure system
   d. Irrigation control system
7. Retesting/Re-inspecting: Regardless of whether original tests or inspections were Contractor's responsibility, provide quality-control services, including retesting and re-inspecting, for construction that revised or replaced Work that failed to comply with requirements established by the Contract Documents.

C. Testing Agency Responsibilities: Cooperate with Engineer and Contractor in performance of duties. Provide qualified personnel to perform required tests and inspections.
   1. Notify Engineer and Contractor promptly of irregularities or deficiencies observed in the Work during performance of its services.
   2. Interpret tests and inspections and state in each report whether tested and inspected work complies with or deviates from requirements.
   3. Submit a certified written report, in duplicate, of each test, inspection, and similar quality-control service through Contractor.
   4. Do not release, revoke, alter, or increase requirements of the Contract Documents or approve or accept any portion of the Work.
   5. Do not perform any duties of Contractor.

D. Associated Services: Cooperate with agencies performing required tests, inspections, and similar quality-control services, and provide reasonable auxiliary services as requested. Notify agency sufficiently in advance of operations to permit assignment of personnel. Provide the following:
   1. Access to the Work.
   2. Incidental labor and facilities necessary to facilitate tests and inspections.
   3. Adequate quantities of representative samples of materials that require testing and inspecting. Assist agency in obtaining samples.
   4. Facilities for storage and field-curing of test samples.

5. Delivery of samples to testing agencies.
6. Preliminary design mix proposed for use for material mixes that require control by testing agency.
7. Security and protection for samples and for testing and inspecting equipment at Project site.

E. Coordination: Coordinate sequence of activities to accommodate required quality-assurance and quality-control services with a minimum of delay and to avoid necessity of removing and replacing construction to accommodate testing and inspecting.

1. Schedule times for tests, inspections, obtaining samples, and similar activities.

PART 2 - PRODUCTS (Not Used)

PART 3 - EXECUTION

3.01 REPAIR AND PROTECTION

A. General: On completion of testing, inspecting, sample taking, and similar services, repair damaged construction and restore substrates and finishes.

1. Provide materials and comply with installation requirements specified in other Sections of these Specifications. Restore patched areas and extend restoration into adjoining areas in a manner that eliminates evidence of patching.

B. Protect construction exposed by or for quality-control service activities.

C. Repair and protection are Contractor's responsibility, regardless of the assignment of responsibility for quality-control services.

END OF SECTION 01 40 00

SECTION 01 50 00
TEMPORARY FACILITIES AND CONTROLS

PART 1 - GENERAL

1.01 SECTION INCLUDES

A. OWNER-Provided Temporary Utilities.

B. Contractor-Provided Temporary Utilities.

C. Security requirements;

D. Laydown yard;

E. Vehicular access and parking.

F. Waste removal facilities and services.

G. Field offices.

1.02 OWNER PROVIDED TEMPORARY UTILITIES & FACILITIES

A. OWNER will provide the following, *provided the Contractor utilizes these services in a conservative and efficient manner*:

1. Electrical power, consisting of connection to OWNER's existing electric infrastructure. Any damage due to making or maintaining this connection shall be completely repair with no cost to the OWNER.

2. Water supply, consisting of connection to OWNER's existing water infrastructure. Any damage due to making or maintaining this connection shall be completely repair with no cost to the OWNER.

3. Location for Contractor's laydown yard adjacent to the Project work area. Contractor shall fully restore the laydown yard site before final payment will be issued.

B. Existing facilities may not be used.

C. Contractor shall use trigger-operated nozzles for water hoses, to avoid waste of water.

1.03 CONTRACTOR-PROVIDED TEMPORARY UTILITIES

A. Telecommunications Services

1. Provide, maintain, and pay for telecommunications services to field office at time of project mobilization.

B. Temporary Sanitary Facilities

1. Provide and maintain required facilities and enclosures. Provide at time of project mobilization.

2. Maintain daily in clean and sanitary condition.

C. Barriers

1. Provide barriers to prevent unauthorized entry to demolition areas, to prevent access to areas that could be hazardous to workers or the public, to allow for OWNER's use of site and to protect existing facilities and adjacent properties from damage from demolition operations.
2. Protect non-owned vehicular traffic, stored materials, site, and structures from damage.

D. Fencing

1. Construction: Commercial grade chain link fence.
2. Provide 6 foot high fence around construction site; equip with vehicular and pedestrian gates with locks. Keep fenced enclosure locked at all times.

E. Bypass Pumping *(in the event that the Runoff Lift Station is inoperative when a significant runoff event occurs)*

1. The Contractor shall provide for dependable bypass pumping for as long as necessary and for any instances where bypass or transfer pumping of collected runoff is required to conduct the Work. All costs for pumping shall be included in the lump sum bid price and specifically identified in the applicable division within the Schedule of Values.

1.04 SECURITY

A. Provide security (as outlined above and in Article 29 of SPECIAL PROVISIONS Section 00 95 10) to protect the project site, existing facilities, and OWNER's operations from unauthorized entry, vandalism, injury or theft.

B. Coordinate with OWNER's security program.

1.05 VEHICULAR ACCESS AND PARKING

A. Comply with regulations relating to use of streets and sidewalks, access to emergency facilities, and access for emergency vehicles.

B. Coordinate access and haul routes with governing authorities and OWNER.

C. Provide and maintain access to fire hydrants, free of obstructions.

D. Provide means of removing mud from vehicle wheels before entering streets.

E. Designated existing on-site roads may be used for construction traffic. Coordinate with Construction Manager and MSH on-site representative.

F. Provide temporary parking areas to accommodate Contractor personnel.

1.06 WASTE REMOVAL

A. Provide waste removal facilities and services as required to maintain the site in clean and orderly condition.

B. Provide containers with lids. Remove trash from site at regular intervals.

C. If materials to be recycled or must be stored on-site, provide suitable non-combustible

storage areas unless otherwise approved by the authorities having jurisdiction.

1.07 FIELD OFFICES

A. Office: Weathertight, with lighting, electrical outlets, heating, ventilating equipment, and equipped with sturdy furniture.

B. Locate offices a minimum distance of 30 feet from existing structures.

1.08 REMOVAL OF UTILITIES, FACILITIES, AND CONTROLS

A. Remove temporary utilities, equipment, facilities, materials, prior to Final Application for Payment inspection.

B. Clean and repair damage caused by installation or use of temporary work.

C. Restore existing facilities used during construction to original condition.

PART 2 - PRODUCTS - NOT USED

PART 3 - EXECUTION - NOT USED

END OF SECTION 01 50 00

SECTION 01 60 00
PRODUCT REQUIREMENTS

PART 1 - GENERAL

1.01 RELATED DOCUMENTS

A. Drawings and Special Provisions of the Contract, including General and Supplementary Conditions and other Division 1 Specifications Sections, apply to this Section.

1.02 SUMMARY

A. This Section includes the following administrative and procedural requirements: selection of products for use in Project: product delivery, storage, and handling; manufacturers' standard warranties on products; special warranties; product substitutions; and comparable products.

B. Related Sections include, but are not limited to, the following:

1. Section 01 77 00 - Closeout Procedures - for submitting warranties for contract closeout.

2. Divisions 2 through 44 for specific requirements for warranties on products and installation specified to be warranted.

1.03 DEFINITIONS

A. Products: Items purchased for incorporating into the Work, whether purchased for Project or taken from previously purchased stock. The term "product" includes the terms "material," "equipment," "system," and terms of similar intent.

1. Named Products: Items identified by manufacturer's product name, including make or model number or other designation, shown or listed in manufacturer's published product literature, that is current as of dated of the Contract Documents.

2. New Products: Items that have not previously been incorporated into another project or facility. Products salvaged or recycled from other projects are no considered new products.

3. Comparable Product: Product that is demonstrated and approved through submittal process, or where indicated as a product substitution, to have the indicated qualities related to type, function, dimension, in-service performance, physical properties, appearance, and other characteristics that equal or exceed those of specified product.

B. Substitutions: Changes in products, materials, equipment, and methods of construction from those required by the Contract Documents and proposed by Contractor.

C. Basis-of-Design Product Specifications: Where a specific manufacturer's product is named including make or model number or other designation, to establish the significant qualities related to type, function, dimension, in-service performance, physical properties, appearance, and other characteristics for purposes of evaluating comparable products of other named manufacturers.

D. Manufacturer's Warranty: Preprinted written warranty published by individual manufacturer for a particular product and specifically endorse by manufacturer to OWNER.

E. Special Warranty: Written warranty required by or incorporated into the Contract Documents, either to extend time limit provided by manufacturer's warranty or to provide more rights for OWNER.

F. Reference herein to the name "Contractor" will be considered the same as the name "seller".

1.04 SUBMITTALS

A. Substitution Request: Submit three copies of each request for consideration. Identify product or fabrication or installation method to be replaced. Include Specification Section number and title and Drawing numbers and titles.

1. Documentation: Show compliance with requirements for substitutions and the following, as applicable:

a. Statement indicating why specified material or product cannot be provided.

b. Coordination information, including a list of changes or modifications needed to other parts of the Work and to construction performed by OWNER and separate contractors, that will be necessary to accommodate proposed substitution.

c. Detailed comparison of significant qualities of proposed substitution with those of the Work specified. Significant qualities may include attributes such as performance, weight, size, durability, visual effect, and specific features and requirements indicated.

d. Product Data, including drawings and descriptions of products and fabrication and installation procedures.

e. Samples, where applicable or requested.

f. List of similar installations for completed projects with project names and addressed and names and addresses of Engineers and OWNERs.

g. Material test reports from a qualified testing agency indicating and interpreting test results for compliance with requirements indicated.

h. Detailed comparison of Contractor's Construction Schedule using proposed substitution with products specified for the Work, including effect on the overall Contract Time. If specified product or method of construction cannot be provided within the Contract Time, include letter from manufacturer, on manufacturer's letterhead, stating lack of availability or delays in delivery.

i. Cost information, including a proposal of change, if any, in the Contract Sum.

j. Contractor's certification that proposed substitution complies with requirements in the Contract Documents and is appropriate for applications indicated.

k. Contractor's waiver of rights to additional payment or time that may subsequently become necessary because of failure of proposed substitution to produce indicated results.

2. Engineer's Action: If necessary, Engineer will request additional information or documentation for evaluation within one week of receipt of a request for substitution. Engineer will notify Contractor of acceptance or rejection of proposed substitution within 15 days of receipt of request, or 7 days of receipt of additional information or documentation, whichever is later.

   a. Form of Acceptance: Change Order.

   b. Use product specified if Engineer cannot make a decision on use of a proposed substitution within time allocated.

B. Basis-of-Design Product Specifications Submittal: Comply with requirements in Division 1 Section "Submittal Procedures" Show compliance with requirements.

C. Contractor will be responsible for any project redesign and/or construction costs that may become necessary as a result of the product substitution.

1.05 QUALITY ASSURANCE

A. Compatibility of Options: If Contractor is given option of selecting between two more products for use on Project, product selected shall be compatible with products previously selected, even if previously selected products were also options.

1.06 PRODUCT DELIVERY, STORAGE AND HANDLING

A. Deliver, store, and handle products using means and methods that will prevent damage, deterioration, and loss including theft. Comply with manufacturer's written instructions.

1. Schedule delivery to minimize long-term storage at Project site and to prevent overcrowding of construction spaces.

2. Coordinate delivery with installation time to ensure minimum holding time for items that are flammable, hazardous, easily damaged, or sensitive to deterioration, theft, and other losses.

3. Deliver products to Project site in an undamaged condition in manufacturer's original sealed container or other packaging system, complete with labels and instructions for handling, storing, unpacking, protecting, and installing.

4. Inspect products on delivery to ensure compliance with the Contract Documents and to ensure that products are undamaged and properly protected.

5. Store products to allow for inspection and measurement of quantity or counting of units.

6. Store materials in a manner that will not endanger Project structure.

7. Store products that are subject to damage by the elements, under cover in a watertight enclosure above ground, with ventilation adequate to prevent condensation.

8. Comply with product manufacturer's written instructions for temperature, humidity, ventilation, and weather-protection requirements for storage.

9. Protect stored products from damage.

1.07 PRODUCT WARRANTIES

A. Warranties specified in other Sections shall be in addition to, and run concurrent with, other warranties required by the Contract Documents. Manufacturer's disclaimers and limitations on product warranties do not relieve Contractor of obligations under requirements of the Contract Documents.

B. Special Warranties: Prepare a written document that contains appropriate terms and identification, ready for execution. Submit a draft for approval before final execution.

1. Refer to Divisions 2 through 16 Sections for specific content requirements and particular requirements for submitting special warranties.

C. Submittal Time: Comply with requirements in Section 01 33 00 – Submittal Procedure and Section 01 77 00 - Closeout Procedures.

PART 2 - PRODUCTS

2.01 PRODUCT OPTIONS

A. General Product Requirements: Provide products that comply with the Contract Documents, that are undamaged, and unless otherwise indicated, that are new at time of installation.

1. Provide products complete with accessories, trim, finish, fasteners, and other items needed for complete installation and indicated use and effect.

2. Standard Products: If available, and unless custom products or nonstandard options are specified, provide standard products of types that have been produced and used successfully in similar situations on other projects.

3. Or Equal: Where products are specified by name and accompanied by the term "or equal" or "or approved equal" or "or "or approved," comply with provisions in "Comparable Products" Article to obtain approval for use of an unnamed product.

B. Product Selection Procedures: Procedures for product selection include the following:

1. Products: Where Specification paragraphs or subparagraphs titled "Products" introduce a list of names of both products and manufacturers, provide one of the products listed that complies with requirements.

a. Substitutions may be considered unless otherwise indicated.

2. Manufacturers: Where Specification paragraphs or subparagraphs titled "Manufacturers" introduce a list of manufacturers' names, provide a product by one of the manufacturers listed that complies with requirements.

a. Substitutions may be considered, unless otherwise indicated.

2.02 PRODUCT SUBSTITUTIONS

A. Timing: Engineer will consider requests for substitution if received within 30 days after the Notice of Award. Requests received after that time may be considered or rejected at discretion of Engineer.

B. Conditions: Engineer will consider Contractor's request for substitution when the following conditions are satisfied. If the following conditions are not satisfied, Engineer will return requests without action, except to record noncompliance with these requirements:

1. Requested substitution offers OWNER a substantial advantage in cost, time, energy conservation, or other considerations, after deducing additional responsibilities OWNER must assume. OWNER's additional responsibilities may include compensation to Engineer for redesign and evaluation services, increased cost of other construction by OWNER, and similar considerations.

2. Requested substitution does not require extensive revisions to the Contract Documents.

3. Requested substitution is consistent with the Contract Documents and will produce indicated results.

4. Substitution request is fully documented and properly submitted.

5. Requested substitution will not adversely affect Contractor's Construction Schedule.

6. Requested substitution has received necessary approvals of authorities having jurisdiction.

7. Requested substitution is compatible with other portions of the Work.

8. Requested substitution has been coordinated with other portions of the Work.

9. Requested substitution provides specified warranty.

2.03 COMPARABLE PRODUCTS

A. Where products or manufacturers are specified by name, submit the following, in addition to other required submittals, to obtain approval of an unnamed product:

1. Evidence that the proposed product does not require extensive revisions to the Contract Documents;

2. That it is consistent with the Contract Documents and will produce the indicted results, and that it is compatible with other portions of the Work.

3. Detailed comparison of significant qualities of proposed product with those named n the Specifications. Significant qualities include attributes such as performance, weight, size, durability, visual effect, and specific features and requirements indicated.

4. Evidence that proposed product provides specified warranty.

5. List of similar installations for completed projects with project names and addresses and names and addresses of Engineers and OWNERs, if requested.
6. Samples, if requested.

PART 3 - EXECUTION (Not Used)

END OF SECTION 01 60 00

SECTION 01 70 00
EXECUTION REQUIREMENTS

PART 1 - GENERAL

1.01 RELATED DOCUMENTS

A. Drawings and Special Provisions of the Contract, including General and Supplementary Conditions and other Division 1 Specifications Sections, apply to this Section.

1.02 SUMMARY

A. This Section includes general procedural requirements governing execution of the Work including, but not limited to, the following:

1. Construction layout.
2. Field engineering and surveying.
3. General installation of products.
4. Coordination of OWNER-installed products.
5. Progress cleaning.
6. Starting and adjusting.
7. Protection of installed construction.
8. Correction of the Work.

B. Related Sections include, but are not limited to, the following:

1. Section 01 31 00 - Project Management and Coordination - for procedures for coordinating field engineering with other construction activities.
2. Section 01 33 00 - Submittal Procedures - for submitting surveys.
3. Section 01 77 00 - Closeout Procedures for submitting final property survey with Project Record Documents, recording of OWNER-accepted deviations from indicated lines and levels, and final cleaning.

1.03 SUBMITTALS

A. Qualification Data: Land surveyors must demonstrate their capabilities and experience. Include lists of completed projects with project names and addressed, names and addresses of Engineers and OWNERs, and other information specified.

1.04 QUALITY ASSURANCE

A. Land Surveyor Qualifications; A professional land surveyor who is legally qualified to practice in jurisdiction where Project is located and who is experienced in providing land-surveying services is necessary for all required legal surveys.

PART 2 - PRODUCTS (Not Used)

PART 3 - EXECUTION

3.01 EXAMINATION

A. Existing Conditions: The existence and location of site improvements, utilities, and other construction indicated as existing are not guaranteed. Before beginning work, investigate and verify the existence and location of mechanical and electrical systems and other construction affecting the Work.

   1. Before construction, verify the location and points of connection of utility services.

B. Existing Utilities: The existence and location of underground and other utilities and construction indicated as existing are not guaranteed. Before beginning sitework, investigate and verify the existence and location of underground utilities and other construction affecting the Work.

   1. Before construction, verify the location and invert elevation at points of connection of sanitary sewer, storm sewer, and water-service piping; and underground electrical services.

   2. Furnish location data for work related to Project that must be performed by public utilities serving Project site.

3.02 PREPARATION

A. Existing Utility Information: Furnish information to local utility that is necessary to adjust, move, or relocated existing utility structures, utility poles, lines, services, or other utility appurtenances located in or affected by construction. Coordinate with authorities having jurisdiction.

B. Existing Utility Interruptions: Do not interrupt utilities serving facilities occupied by OWNER or others unless permitted under the following conditions and then only after arranging to provide temporary utility services according to requirements indicated:

   1. Notify Engineer not less than two days in advance of propose utility interruptions.

   2. Do not proceed with utility interruptions without Engineer's written permission.

C. Field Measurements: Take field measurements as required to locate and execute the Work properly. Recheck measurements before installing each product. Where portions of the Work are indicated to fit to other construction, verify dimensions of other construction by field measurements before fabrication. Coordinate fabrication schedule with construction progress to avoid delaying the Work.

D. Space Requirements: Verify space requirements and dimensions of items shown on Drawings.

E. Review of Contract Documents and Field Conditions: Immediately on discovery of the need for clarification of the Contract Documents, submit a request for information to Engineer. Include a detailed description of problem encountered, together with recommendations for changing the Contract Documents.

3.03 CONSTRUCTION LAYOUT

A. Verification: Before proceeding to lay out the Work, verify layout information shown on

Drawings, in relation to the property survey and existing benchmarks. If discrepancies are discovered, notify Engineer promptly.

B. General: Engage a land surveyor to lay out the Work using accepted surveying practices.

1. Establish benchmarks and control points to set lines and levels.
2. Establish dimensions within tolerances indicated. Do not scale Drawings to obtain required dimensions.
3. Inform installers of lines and levels to which they must comply.
4. Check the location, level and plumb, of every major element as the Work progresses.
5. Notify Engineer when deviations from required lines and levels exceed allowable tolerances.
6. Close site surveys with an error of closure equal to or less than the standard established by authorities in the surveying discipline.

C. Site Improvements: Locate and lay out site improvements, including pavements, grading, fill and topsoil placement, utility slopes, and invert elevations.

D. Record Log: Maintain a log of layout control work. Record deviations from required lines and levels. Include beginning and ending dates and times of surveys, weather conditions, name and duty of each survey party member, and types of instruments and tapes used. Make the log available for reference by Engineer.

3.04 FIELD ENGINEERING

A. Identification: OWNER & Engineer will identify existing benchmarks, control points, and property corners.

B. Reference Points: Locate existing permanent benchmarks, control points, and similar reference points before beginning the Work. Preserve and protect permanent benchmarks and control points during construction operations.

1. Do not change or relocated existing benchmarks or control points without prior written approval of Engineer. Report lost or destroyed permanent benchmarks or control points promptly. Report the need to relocate permanent benchmarks or control points to Engineer before proceeding.
2. Replace lost or destroyed permanent benchmarks and control points promptly. Base replacements on the original survey control points.

C. Benchmarks: Establish and maintain a minimum of two permanent benchmarks on Project site, referenced to data established by survey control points. Comply with authorities having jurisdiction for type and size of benchmark.

1. Record benchmark locations, with horizontal and vertical data, on Project Record Documents.
2. Where the actual location or elevation of layout points cannot be marked, provide temporary reference points sufficient to locate the Work.

3. Remove temporary reference points when no longer needed. Restore marked construction to its original condition.

3.05 INSTALLATION

A. General: Locate the Work and components of the Work accurately, in correct alignment and elevation, as indicated.

1. Make vertical work plumb and make horizontal work level or relative to level as indicated on the Project Drawings.

2. Where space is limited, install components to maximize space available for maintenance and ease of removal for replacement.

B. Comply with manufacturer's written instructions and recommendations for installing products in applications indicated.

C. Install products at the time and under conditions that will ensure the best possible results. Maintain conditions required for product performance until Substantial Completion.

D. Conduct construction operations so no part of the Work is subjected to damaging operations or loading in excess of that expected during normal conditions of occupancy.

E. Tools and Equipment: Do not use tools or equipment that produces harmful noise levels.

F. Anchors and Fasteners: Provide anchors and fasteners as required to anchor each component securely in place, accurately located and aligned with other portions of the Work.

G. Hazardous Materials: Use products, cleaners and installation materials that are not considered hazardous.

3.06 PROGRESS CLEANING

A. General: Clean Project site and work areas daily, including common areas. Coordinate progress cleaning for joint-use areas where more than one installer has worked. Enforce requirements strictly. Dispose of material lawfully.

1. Containerize hazardous and unsanitary waste materials separately from other waste. Mark containers appropriately and dispose of legally, according to regulations.

B. Site: Maintain Project site free of waste materials and debris.

C. Work Areas: Clean areas where work is in progress to the level of cleanliness necessary for proper execution of the Work.

1. Remove liquid spills promptly.

D. Installed Work: Keep installed work clean. Clean installed surfaces according to written instructions of manufacturer or fabricator of product installed, using only cleaning materials specifically recommended. If specific cleaning materials are not recommended, use cleaning materials that are not hazardous to health or property and that will not damage exposed surfaces.

E. Exposed Surfaces: Clean exposed surfaces and protect as necessary to ensure freedom

from damage and deterioration at time of Substantial Completion.

F. Cutting and Patching: Clean areas and spaces where cutting and patching are performed. Completely remove paint, shavings, mortars, oils, putty, and similar materials.

1. Thoroughly clean piping, conduit, and similar features before applying paint or other finishing materials. Restore damaged pipe covering to its original Condition.

G. Waste Disposal: Burying or burning waste materials on-site will not be permitted. Washing waste materials down sewers or into waterways will not be permitted.

H. During handling and installation, clean and protect construction in progress and adjoining materials already in place. Apply protective covering where required to ensure protection from damage or deterioration at Substantial Completion.

I. Clean and provide maintenance on completed construction as frequently as necessary through the remainder of the construction period. Adjust and lubricate operable components to ensure operability without damaging effects.

J. Limiting Exposures: Supervise construction operations to assure that no part of the construction completed or in progress, is subject to harmful, dangerous, damaging, or otherwise deleterious exposure during the construction period.

3.07 STARTING AND ADJUSTING

A. Start equipment and operating components to confirm proper operation. Remove malfunctioning units, replace with new units, and retest.

B. Adjust operating components for proper operation without binding. Adjust equipment for proper operation.

C. Test each piece of equipment to verify proper operation. Test and adjust controls and safeties. Replace damaged and malfunctioning controls and equipment.

D. Manufacturer's Field Service: If a factory-authorized service representative is required to inspect field-assembled components and equipment installation, comply with qualifications requirements in Division 1 Section "Quality Requirements."

3.08 PROTECTION OF INSTALLED CONSTRUCTION

A. Provide final protection and maintain conditions that ensure installed Work is without damage or deterioration at time of Substantial Completion.

3.09 CORRECTION OF THE WORK

A. Repair or remove and replace defective construction.

1. Repair includes replacing defective parts, refinishing damaged surfaces, and properly adjusting operating equipment.

B. Restore permanent facilities used during construction to their specified condition.

C. Remove and replace damaged surfaces that are exposed to view if surfaces cannot be repaired without visible evidence of repair.

D. Repair components that do not operate properly. Remove and replace operating components that cannot be repaired.

END OF SECTION 01 70 00

SECTION 01 75 00
STARTING AND ADJUSTING

PART 1 - GENERAL

1.01 SUMMARY

A. Section includes:

1. Starting Systems.
2. Adjusting
3. Pre-functional Testing

B. Related Sections include:

1. Section 01 40 00 – Quality Requirements
2. Section 01 77 00 – Closeout Procedures
3. Section 01 79 00 – Classroom and Demonstration Testing
4. Section 01 91 00 – General Commissioning Requirements

1.02 QUALITY ASSURANCE

A. Provide authorized and qualified manufacturer's representative to inspect, check, and approve equipment installation prior to start-up, at start-up and to assist with pre-functional testing.

B. Authorized representative shall supervise placing equipment into operation.

C. Prior to Functional Testing, provide written confirmation that systems have been tested, adjustments have been made, and equipment pre-functional testing is complete. Functional testing shall not commence until written approval of pre-functional testing is provided by Engineer.

D. Provide access to equipment and systems. Operate systems at designated times and under conditions required.

E. Contractor shall submit four (4) copies of written start-up report for each system or equipment item following each start-up and each pre-functional test.

1.03 SCHEDULING

A. *Contractor shall notify OWNER's representative of the intent to start-up and submit start-up and pre-functional testing checklists at least 15 calendar days prior to proposed dates*. List times and dates for each system or equipment item. Include names of Contractors and subcontractors personnel, manufacturer, and/or authorized representative proposed to perform services. Provide documentation to verify their qualifications.

B. Contractor shall coordinate scheduling of start-up and pre-functional testing. Scheduling shall be subject to approval of OWNER and Engineer.

C. Contractor shall notify OWNER and Engineer of changes in scheduling at least five (5) days in advance prior to scheduled start-up of individual systems or equipment. Scheduling

changes shall be subject to approval by OWNER and Engineer.

PART 2 - PRODUCTS (Not Used)

PART 3 - EXECUTION

3.01 PREPARATION

A. Confirm wiring to motors and controls are operational.

B. Inspect equipment for cleanliness and remove or clean foreign matter.

C. Lubricate each piece of equipment according to manufacturer's instructions. Check alignment, drive rotation, equipment speed, control sequence, and other conditions which may cause damage. Provide adjustment as required.

D. Confirm that equipment is properly anchored and supported.

E. Confirm wiring to motors and controls are operational.

F. Confirm that auxiliary systems such as seal water and spray water systems are operational.

G. Confirm that tests, meter readings, and specific electrical characteristics, including motor amperage agree with those specified.

H. Confirm that control system is operational in automatic mode.

I. Inspect hand and automatic valves, clean bonnets and stems, tighten packing glands to ensure no leakage. Adjust valves as necessary for proper operation. Verify valve proper valve positioning for prior to start-up and testing of associated equipment.

J. Provide instruments required for testing, adjusting, and balancing operations.

K. All costs associated with starting, testing, adjusting, and balancing equipment including power and fuel costs shall be responsibility of the Contractor.

3.02 START UP

A. Provide services of an Experienced, Competent and Authorized Representative of Manufacturer for minimum of (8) hours. Additional starting services shall be provided if called for in individual specification sections. Representative shall, at a minimum, perform the following:

1. Inspect equipment covered by these Specifications.

2. Supervise any adjustments and installation checks.

3. Assist in start-up of equipment and operation checks and tests, including pre-functional testing.

4. Conduct manufacturer's recommended startup and checkout procedures.

5. Furnish OWNER and Engineer with a written report prepared by equipment supplier certifying that equipment:

a. Has been properly installed.

b. Is in accurate alignment.

c. Is free from an undue stress imposed by connecting piping, anchor bolts, etc.

d. Has been operated under full load conditions and that it operated satisfactorily.

3.03 ADJUSTING

A. Adjust operating products and equipment to ensure smooth and unhindered operation.

3.04 PRE-FUNCTIONAL TESTING

A. Contractor shall develop pre-functional checklists with the start-up plans.

B. A Pre-functional Checklist is required to be filled out for each item of equipment or other assembly specified to be commissioned.

1. No sampling of identical or near-identical items is allowed.

2. These checklists do not replace manufacturers' recommended startup checklists, regardless of apparent redundancy.

3. The following types of information will be gathered via the completed Checklist forms:

a. Certification by installing contractor that the unit is properly installed, started up, and operating and ready for Functional Testing.

b. Confirmation of receipt of each shop drawing and commissioning submittal specified, itemized by unit.

c. Manufacturer, model number, and relevant capacity information; list information "as specified," "as submitted," and "as installed."

d. Serial number of installed unit.

e. List of inspections to be conducted to document proper installation prior to Functional Testing; these will be primarily static inspections and procedures; for equipment and systems may include normal manufacturer’s start-up checklist items and minor testing.

C. Contractor is responsible for filling out Pre-functional Checklists. Witnessing by the Engineer and/or OWNER is not required unless otherwise specified.

1. Each line item without deficiency is to be witnessed, initialed, and dated by the actual witness; checklists are not complete until all line items are initialed and dated complete without deficiencies.

2. Checklists with incomplete items may be submitted for approval provided the Contractor attests that incomplete items do not preclude the performance of safe and reliable Functional Testing; re-submission of the Checklist is required upon completion of remaining items.

3. Individual Checklists may contain line items that are the responsibility of more than one installer; Contractor shall assign responsibility to appropriate installers or subcontractors, with identification recorded on the form.

4. If any Checklist line item is not relevant, record reasons on the form.

5. Contractor may independently perform startup inspections and/or tests, at Contractor's

option.

6. Regardless of these reporting requirements, Contractor is responsible for correct startup and operation.
7. Submit completed Checklists to Engineer within two days of completion.

D. Pre-functional testing to be completed by Contractor to ensure equipment and systems integral to them are complete and ready for functional testing. Completed checklist shall contain language

END OF SECTION 01 75 00

SECTION 01 77 00
CLOSEOUT PROCEDURES

PART 1 - GENERAL

1.01 SUMMARY

A. Section Includes:

1. Closeout Procedures.
2. Substantial Completion
3. Final Completion
4. Certificate of Occupancy
5. Final Cleaning.
6. Project Record Documents.
7. Spare parts and Maintenance Products.
8. Warranties and Bonds.
9. Maintenance Service.

B. Related Sections include:

1. Section 01 31 00 – Project Management & Coordination.
2. Section 01 50 00 – Temporary Facilities and Controls.
3. Section 01 75 00 – Starting and Adjusting.
4. Section 01 78 23 – Operation and Maintenance Data.

1.02 CLOSEOUT PROCEDURES

A. Submit written certification that Contract Documents have been reviewed, Work has been inspected, and that Work is complete in accordance with Contract Documents and ready for Engineer's review.

B. Provide submittals to Engineer that are required by governing or other authorities.

C. Submit final Application for Payment identifying total adjusted Contract Sum, previous payments, and sum remaining due.

D. OWNER will occupy all portions of the Project.

1.03 SUBSTANTIAL COMPLETION

A. Prior to substantial completion Contractor shall review Contract Documents for items which are not complete or need to yet be completed including submittal of all manuals, and testing reports. Contractor shall make a list of incomplete work, a value of the incomplete work, and reasons why work is incomplete. Contractor shall complete all items required to be completed as part of substantial completion.

B. Contractor shall provide a written notice to Engineer that the work, or specific portions of

the work, is substantially complete and ready for review. If there are any items remaining to be corrected or completed Contractor shall submit a list of these items along with the notice of substantial completion. Along with the list of items the Contractor should provide a written explanation of why these items are not considered necessary for substantial completion.

C. Upon receipt of Contractor's notice of substantial completion, Engineer will proceed with inspection for substantial completion.

D. Following the substantial completion inspection by the Engineer and Engineer's subconsultants, Engineer will either prepare certificate of substantial completion, or notify the Contractor in writing that substantial completion has not been meant listing the various reasons.

E. Contractor shall promptly complete the items required to meet substantial completion and submit a second notice of substantial completion to the Engineer.

F. Engineer will review the work a second time do determine the status of substantial completion.

G. When Engineer considers the project to be substantially complete, Engineer will prepare the preliminary certificate of substantial completion along with a substantial completion punch list of items to be completed prior to final payment. Engineer will deliver preliminary certificate and punch list to OWNER and consider any objections by the OWNER as provided in the Conditions of the Contract.

H. Upon agreement by OWNER and Engineer of substantial completion and punch list items, Engineer will execute and deliver to the Contractor and OWNER a final certificate of substantial completion along with substantial completion punch list of items to be completed prior to final payment.

I. A maximum of two (2) reviews of substantially complete work will be completed by Engineer and Engineer's subconsultants for any one portion of work under the Contract. Should a third or subsequent reviews be necessary the following requirements will be met:

   1. OWNER will compensate Engineer for additional reviews.

   2. OWNER will deduct the amount of compensation paid to the Engineer for additional reviews from the payment to the Contractor.

   3. Compensation shall be at Engineer's standard hourly rates plus actual cost of reimbursables.

1.04 FINAL COMPLETION

A. Following substantial completion Contractor shall complete remaining work and items to be corrected as part of substantial completion punch list as well as final cleaning and transferring site to OWNER.

B. When Contractor considers that all work is complete, Contractor shall provide written notice of final completion to Engineer.

C. Following receipt of final completion certification, Engineer and Engineer's subconsultants

shall review the work to verity that the requirements for final completion have been met.

D. Upon review of work for final completion Engineer will either request the Contractor to make closeout submittals or will notify Contractor that the work is not complete with a list of incomplete or defective work.

E. Contractor shall promptly take steps to correct all listed deficiencies and incomplete work before sending a second written notice of final completion certification to Engineer.

F. If final completion was not met following first review, Engineer will review work a second time to determine if the requirements for final completion have been met.

G. A maximum of two (2) reviews of final complete work will be completed by Engineer and Engineer's subconsultants for any one portion of work under the Contract. Should a third or subsequent reviews be necessary the following requirements will be met:

   1. OWNER will compensate Engineer for additional reviews.

   2. OWNER will deduct the amount of compensation paid to the Engineer for additional reviews from the payment to the Contractor.

   3. Compensation shall be at Engineer's standard hourly rates plus actual cost of reimbursables.

H. When Engineer considers all work to be complete in accordance with the Contract Documents, Engineer shall request the Contractor to make closeout submittals.

1.05 CERTIFICATE OF OCCUPANCY

A. In accordance with State Building Codes, when WORK is complete and ready for occupancy, CONTRACTOR shall contact local building official and request a final building code review for the purposes of obtaining a Certificate of Occupancy for the new Water Treatment Plant.

B. CONTRACTOR shall, in accordance with Supplementary Conditions submit copy of Certificate of Occupancy with final Application for Payment.

1.06 FINAL CLEANING

A. Execute final cleaning prior to final project assessment.

B. Clean interior and exterior glass, surfaces exposed to view; remove temporary labels, stains, and foreign substances, polish transparent and glossy surfaces, mop all floors.

C. Clean equipment and fixtures to a sanitary condition with cleaning materials appropriate to the surface and material being cleaned.

D. Replace filters of operating equipment.

E. Clean debris from roofs, gutters, downspouts, and drainage systems.

F. Clean site; sweep paved areas, rake clean landscaped surfaces.

G. Remove waste and surplus materials, rubbish, and construction facilities from the site.

1.07 PROJECT RECORD DOCUMENTS

A. Maintain on site one set of the following record documents; record actual revisions to the Work:

1. Drawings.
2. Specifications.
3. Addenda.
4. Change Orders and other modifications to the Contract.
5. Reviewed Shop Drawings, Product Data, and Samples.
6. Manufacturer's instruction for assembly, installation, and adjusting.

B. Ensure entries are complete and accurate, enabling current and future reference by OWNER and Engineer.

C. Store record documents separate from documents used for construction.

D. Record information concurrent with construction progress.

E. Specifications: Legibly mark and record at each Product section description of actual Products installed, including the following:

1. Manufacturer's name and product model and number.
2. Product substitutions or alternates utilized.
3. Changes made by Addenda and modifications.

F. Record Drawings and Shop Drawings: Legibly mark each item to record actual construction including:

1. Measured depths of foundations in relation to finish first floor datum.
2. Measured horizontal and vertical locations of underground utilities and appurtenances, referenced to permanent surface improvements.
3. Provide GPS survey during construction for horizontal and vertical locations of all underground piping and utilities at fittings, valves, building connections, pull boxes, junction boxes, manholes, and other appurtenances.
4. Measured locations of internal utilities and appurtenances concealed in construction, referenced to visible and accessible features of the Work.
5. Field changes of dimension and detail.
6. Details not on original Contract drawings.

G. Submit documents to Engineer with claim for final Application for Payment.

1.08 SPARE PARTS AND MAINTENANCE PRODUCTS

A. Provide spare parts, maintenance, and extra Products in quantities specified in individual specification sections.

B. Deliver to Project site and place in location as directed by OWNER; obtain receipt prior to

final payment.

1.09 WARRANTIES AND BONDS

A. Provide duplicate notarized copies.

B. Execute and assemble transferable warranty documents from Subcontractors, suppliers, and manufacturers.

C. Provide Table of Contents and assemble in D size three ring binders with durable plastic cover.

D. Submit prior to final Application for Payment.

E. For items of Work delayed beyond date of Substantial Completion, provide updated submittal within 10 days after acceptance.

1.10 MAINTENANCE SERVICE

A. Furnish service and maintenance of components during the warranty period.

B. Examine system components at a frequency consistent with reliable operation. Clean, adjust, and lubricate as required.

C. Include systematic examination, adjustment, and lubrication of components. Repair or replace parts whenever required. Use parts produced by the manufacturer of the original component.

D. Maintenance service shall not be assigned or transferred to any agent or Subcontractor without prior written consent of the OWNER.

1.11 FINAL ADJUSTMENT OF ACCOUNTS

A. Contractor shall submit a final statement of accounting to Engineer. Statement shall reflect all adjustments to the contract sum and include the following:

1. Original contract sum.

2. Additions and deductions resulting from:

a. All previous change orders

b. Allowances

c. Unit prices

d. Deductions for uncorrected work

e. Penalties and bonuses

f. Deductions for liquidated damages

g. Deductions for multiple reviews

h. Other adjustments

3. Total contract sum as adjusted.

4. Previous payments.

5. Sum remaining due.

B. Engineer will prepare a final change order, reflecting approved adjustments to the contract sum which were not previously made by change orders.

PART 2 - PRODUCTS (Not Used)

PART 3 - EXECUTION (Not Used)

END OF SECTION 01 77 00

SECTION 01 78 23
OPERATION AND MAINTENANCE DATA

PART 1 - GENERAL

1.01 SUMMARY

A. Section includes:

1. Quality Assurance.
2. Format.
3. Contents of Each Volume.
4. Manual for Equipment and Systems.
5. Instruction of Owner's personnel.
6. Submittals.
7. Asset Management Submittals.
8. Schedule of Submittals.

B. Related Sections include:

1. Section 01 33 00 – Submittal Procedures.
2. Section 01 40 00 – Quality Requirements.
3. Section 01 77 00 – Closeout Procedures.

1.02 QUALITY ASSURANCE

A. Prepare instructions and data by personnel experienced in maintenance and operation of described products.

1.03 FORMAT

A. Prepare data in the form of an instructional manual. Arrange data in numerical format in accordance with the Specification Divisions.

1. Binders:

a. Commercial quality, 8½" x 11" three D size ring binders with durable plastic covers.

b. 2" maximum ring size.

c. When multiple binders re-used, correlate data into related consistent groupings.

2. Cover; Identify:

a. Each binder with typed title OPERATION AND MAINTENANCE INSTRUCTIONS.

b. Title of Project.

c. Subject matter of contents.

d. Volume number.

e. Year of construction.

3. Provide tabbed dividers for each separate product and system, with typed description of product and major component parts of equipment.

B. Text: Manufacturer's printed data, or typewritten data on 24 pound paper.

C. Drawings: Provide with reinforced punched binder tab. Bind in with text; fold larger drawings to size of text pages. Folded paper should be un-foldable without removal from binder.

D. Contents: Prepare a Table of Contents for each volume, with each Product or system description identified, in three parts as follows:

1. Part 1: Directory, listing names, addresses, and telephone numbers of Engineer, Contractor, Subcontractors, and major equipment suppliers.

2. Part 2: Operation and maintenance instructions, arranged by system and subdivided by specification section. For each category, identify names, addresses, and telephone numbers of Subcontractors and suppliers. Identify the following:

a. Significant design criteria.

b. List of equipment.

c. Parts list for each component.

d. Operating instructions.

e. Maintenance instructions for equipment and systems.

3. Part 3: Project documents and certificates, including the following:

a. Shop drawings and product data.

b. Air and water balance reports.

c. Certificates.

d. Photocopies of warranties.

e. Bonds.

1.04 CONTENTS OF EACH VOLUME

A. Table of Contents: Provide title of Project; names, addresses, and telephone numbers of Engineer, Subconsultants, and Contractor with name of responsible parties; schedule of products and systems, indexed to content of the volume.

B. For Each Product or System: List names, addresses and telephone numbers of Subcontractors and suppliers, including local source of supplies and replacement parts.

C. Product Data: Mark each sheet to clearly identify specific products and component parts, and data applicable to installation. Delete inapplicable information.

D. Drawings: Supplement product data to illustrate relations of component parts of equipment

and systems, to show control and flow diagrams. Do not use Project Record Documents as maintenance drawings.

E. Typed Text: As required to supplement product data. Provide logical sequence of instructions for each procedure, incorporating manufacturer's instructions.

F. Warranties: Prepare and submit per Section 01 77 00 (Closeout Procedures)

G. Bonds: Prepare and submit per Section 01 77 00.

1.05 MANUAL FOR EQUIPMENT AND SYSTEMS

A. Each Item of Equipment and Each System: Include description of unit or system, and component parts. Identify function, normal operating characteristics, and limiting conditions. Include performance curves, with engineering data and tests, and complete nomenclature and model number of replaceable parts.

B. Panelboard Circuit Directories: Provide electrical service characteristics, controls, and communications; typed. Refer to applicable Division 16 specification Sections.

C. Include color coded wiring diagrams as installed. Refer to applicable Division 26 specification Sections.

D. Operating Procedures: Include start-up, break-in, and routine normal operating instructions and sequences. Include regulation, control, stopping, shut-down, and emergency instructions. Include summer, winter, and any special operating instructions.

E. Maintenance Requirements: Include routine procedures and guide for preventative maintenance and troubleshooting; disassembly, repair, and reassembly instructions; and alignment, adjusting, balancing, and checking instructions.

F. Provide servicing and lubrication schedule, and list of lubricants required.

G. Include manufacturer's printed operation and maintenance instructions.

H. Include sequence of operation by controls manufacturer.

I. Provide original manufacturer's parts list, illustrations, assembly drawings, and diagrams required for maintenance.

J. Provide control diagrams by controls manufacturer as installed.

K. Provide Contractor's coordination drawings, with color coded piping diagrams as installed.

L. Provide charts of valve tag numbers, with location and function of each valve, keyed to flow and control diagrams.

M. Provide list of original manufacturer's spare parts, current prices, and recommended quantities to be maintained in storage, and local sources of supply.

N. Additional Requirements: As specified in individual Product specification sections.

O. Provide a listing in Table of Contents for design data, with tabbed dividers and space for insertion of data.

P. Electronic Copies: USB drives shall be provided with all manuals in electronic format in a

portable document format (*.pdf). The documents shall be placed as required under the appropriate tabs and labels as previously required for the compact disk. Each file shall be adequately labeled to identify the contents without requiring the document to be opened. Additionally all files shall be named consistently and in a uniform system for cataloguing files.

1.06 INSTRUCTION OF OWNER PERSONNEL

A. Before final inspection, instruct Owner's designated personnel in operation, adjustment, and maintenance of products, equipment, and systems, at agreed upon times.

B. For equipment requiring seasonal operation, perform instructions for other seasons within six months.

C. Use operation and maintenance manuals as basis for instruction. Review contents of manual with personnel in detail to explain all aspects of operation and maintenance.

D. Prepare and insert additional data in Operation and Maintenance Manual when need for such data becomes apparent during instruction.

1.07 SUBMITTALS

A. Submit electronic copy of preliminary draft or proposed formats and outlines of contents before Substantial Completion. Engineer will review draft and return one copy with comments.

B. For equipment, or component parts of equipment put into service during construction and operated by Owner, submit documents within ten days after acceptance.

C. Submit electronic copies of completed volumes fifteen (15) working days prior to final inspection. One (1) copy will be returned after final inspection, with Engineer comments. Revise content of all document sets as required prior to final submission.

D. Submit four (4) sets of revised final volumes in final form within ten (10) days after final inspection.

1.08 ASSET MANAGEMENT SUBMITTALS

A. Contractor shall submit additional information on equipment and asset information in an excel spreadsheet. Engineer shall supply Contractor with the excel spreadsheet with equipment and tags and Contractor shall be responsible for coordinating with manufactures and vendors to fill out the spreadsheet for the equipment types and information indicated below. Information shall be provided for all process equipment, valves, gates, instruments, mechanical equipment, electrical equipment, hoists, and any other equipment deemed necessary to document by the Owner. Information shall include but not limited to:

1. Product Name & Model
2. Manufacturer Contact Information (Phone/Email/Address)
3. Supplier Contact Information (Phone/Email/Address)
4. Asset Cost

5. Asset Installation Cost
6. Warranty Expiration Date
7. Warranty Length
8. Pump Information (Impeller Size/Inlet Size/Outlet Size)
9. Blower Information (Discharge Pressure/Air Flow/Speed/Design Air Temperature)
10. Valves & Dampers (Size/Type/Material/Mount Type/Actuator Type)
11. Flow Meters (Type/Size/Mount Type/Range)
12. Actuators (Torque Range/Output Speed/Position Range)
13. Filters (Type/Opening Size/Capacity)
14. Screens (Type/Opening Size/Design Flow)
15. Instruments (Size/Accuracy/Range/Voltage/Current Output)
16. Electrical Equipment (KVA/Voltage/Phase/Horizontal Amps/Vertical Amps)
17. Heating Equipment (BTU Input/KW Input/Airflow/Voltage/Phase/Wattage)
18. Ventilation Equipment (Vent Size/Design Air Flow/Drive Type/Fan Diameter)
19. Cooling Equipment (BTU Input/KW Input/Airflow/Voltage/Phase/Wattage)
20. Safety Equipment (Fire Extinguishers/Smoke Detectors/Gas Detectors/Eye Wash/Safety Harness)
21. Motor Information (Horsepower/RPM/Voltage/Phase/Frame/Full Load Amps/Manufacturer/Manufacturer Contact Information /Model/Serial Number)

B. Contractor shall also provide preventative maintenance forms for specific maintenance requirements for pieces of equipment. The preventative maintenance forms shall include steps to take to perform maintenance and shall be provided in an electronic format in a form which can be input into an asset management system. Engineer shall supply contractor with a typical form and Contractor shall be responsible for filling out preventative maintenance forms for the equipment types specified above and coordinating with manufactures and vendors to fill out forms.

C. Contractor shall supply an installed photo of all equipment in spreadsheet to be included in the asset management software system.

D. Contractor shall coordinate RFID tags from equipment to integrate into the asset management system selected by the Owner.

PART 2 - PRODUCTS (Not Used)

PART 3 - EXECUTION (Not Used)

END OF SECTION 01 78 23

SECTION 01 78 39
PROJECT RECORD DOCUMENTS

PART 1 - GENERAL

1.01 SCOPE

A. Throughout progress of the work, maintain an accurate record of changes in the Contract Documents, as described below. Upon completion of the work, submit all recorded changes to the Engineer.

1.02 QUALITY ASSURANCE

A. Delegate the responsibility for maintenance of Record Documents to one person on the Contractor's staff.

1.03 ACCURACY OF RECORDS

A. Thoroughly coordinate changes within the Record Documents, making adequate and proper entries on each page of Specifications and each sheet of drawings and other documents where such entry is required to describe the change properly.

B. Accuracy of records shall be such that future search for items shown in the Contract Documents may rely reasonably on information obtained from the approved Project Record Documents.

C. Make entries within 24 hours after receipt of information that the change has occurred or has been observed.

1.04 PRODUCT HANDLING

A. Protect the job set of Record Documents from deterioration loss and/or damage at all times.

B. If the recorded data is lost, use means necessary to secure the data to the Engineers satisfaction. Acquisition of required data will be at contractor’s expense.

1. Such means shall include, if necessary in the opinion of the Engineer, removal and replacement of concealing materials.

2. In such case, restore work to the requirements or the contract documents.

PART 2 - MATERIALS

2.01 RECORD DOCUMENTS

A. Job Set: Promptly following receipt of the Engineer's Notice to Proceed, secure from the Engineer at no charge to the Contractor/Equipment Supplier one complete set of all documents in hard copy and one in electronic format.

PART 3 - INSTALLATION/WORKMANSHIP

3.01 MAINTENANCE OF JOB SET

A. Immediately upon receipt of the job set described above, identify each of the documents with the title, "RECORD DOCUMENTS - JOB SET".

B. Preservation:

1. Considering the contract completion time, the probable number of occasions upon which the job set must be taken out for new entries and for examination, and the conditions under which these activities will be performed, devise a suitable method for protecting the job set acceptable to the Engineer.

2. Do not use the job set for any purpose except entry of new data and for review by the Engineer.

C. Making entries on drawings:

1. Using an erasable colored pencil (not ink or indelible pencil), clearly describing the change by graphic line and note as required.

2. Date all entries.

3. Call attention to the entry by a "cloud" drawn around the area or areas affected.

4. In the event of overlapping changes, use different colors for the overlapping changes.

D. Make entries in the other pertinent documents as approved by the Engineer.

E. Conversion of schematic layouts:

1. In some cases on the drawings, arrangements of conduits, circuits, piping, ducts, and similar items, are shown schematically and are not intended to portray precise physical layout.

2. Final physical arrangement is determined by the Contractor, subject to the Engineer's approval.

3. However, design of future modifications of the facility may require accurate information as to the final physical layout of items which are shown only schematically on the drawings.

4. Show on the job set of Record Drawings, by dimension accuracy within one inch, the centerline of each run of items as described above.

5. Clearly identify the item by accurate note such as "cast iron drain", "galv. water", and the like.

6. Show, by symbol or note, the vertical location of the item ("under slab", "in ceiling plenum", "exposed", and the like).

7. Make all identification sufficiently descriptive that it may be related reliably to the Specifications.

3.02 FINAL PROJECT RECORD DOCUMENTS

A. Review and submittal:

1. Submit the completed set of Project Record Documents to the Engineer.

2. Participate in biweekly review meetings.
3. The Engineer will transfer the information from the project record document to the original project documents which will be noted as record drawings.

3.03 CHANGES SUBSEQUENT TO ACCEPTANCE

A. The Contractor is not responsible for recording changes in the work subsequent to final completion, except for changes resulting from work performed under warranty.

END OF SECTION 01 78 39

SECTION 01 79 00
CLASSROOM AND DEMONSTRATION TRAINING

PART 1 - GENERAL

1.01 SUMMARY

A. Classroom training and demonstration training of products and systems to be commissioned and where indicated in specific specification sections.

B. Training of City of Missoula personnel in operation and maintenance is required for:

1. Compost Control System;
2. Electrical systems and equipment;
3. Items specified in individual product Sections.

1.02 RELATED REQUIREMENTS

A. Section 01 33 00 – Submittals

B. Section 01 91 00 – General Commissioning Requirements

C. Section 01 77 00 – Closeout Procedures.

1.03 SUBMITTALS

A. Draft Training Plans: City of Missoula will designate personnel to be trained; tailor training to needs and skill-level of attendees.

1. Submit to Engineer for transmittal to City of Missoula.
2. Submit not less than four weeks prior to start of training.
3. Revise and resubmit until acceptable.
4. Provide an overall schedule showing all training sessions.
5. Include at least the following for each training session:

a. Identification, date, time, and duration.
b. Description of products and/or systems to be covered.
c. Name of firm and person conducting training; include qualifications.
d. Intended audience, such as job description.
e. Objectives of training and suggested methods of ensuring adequate training.
f. Methods to be used, such as classroom lecture, live demonstrations, hands-on, etc.
g. Media to be used, such as slides, hand-outs, etc.
h. Training equipment required, such as projector, projection screen, etc., to be provided by Contractor.

B. Training Manuals: Provide training manual for each attendee; allow for minimum of three attendees per training session.

1. Include applicable portion of O&M manuals.
2. Include copies of all hand-outs, slides, overheads, video presentations, etc. that are not

included in O&M manuals.

3. Provide one extra copy of each training manual to be included with operation and maintenance data.

C. Training Reports:

1. Identification of each training session, date, time, and duration.

2. Sign-in sheet showing names and job titles of attendees.

D. Video Recordings: Submit digital video recording of each demonstration and classroom training session for City of Missoula's subsequent use.

1. Format: USB thumb drive

2. Label each drive with session identification and date.

3. Include only one training session on each drive

1.04 SCHEDULE

A. Classroom training shall occur after completion of Pre-functional Testing and prior to Performance and Operation Testing.

B. Demonstration training shall occur after written acceptance of Functional Test completion.

1.05 QUALITY ASSURANCE

A. Instructor Qualifications: Familiar with design, operation, maintenance and troubleshooting of the relevant products and systems.

1. Provide as instructors the most qualified trainer of those contractors and/or installers who actually supplied and installed the systems and equipment.

2. Where a single person is not familiar with all aspects, provide specialists with necessary qualifications.

PART 2 - PRODUCTS (Not Used)

PART 3 - EXECUTION

3.01 DEMONSTRATION TRAINING

A. Demonstrations conducted during system start-up and pre-functional testing do not qualify as demonstrations for the purposes of this section, unless approved in advance by Engineer and City of Missoula in writing.

B. Demonstration Training for City of Missoula personnel shall not be conducted during Functional Testing unless approved in advance by Engineer and City of Missoula in writing.

C. Demonstration training may be conducted prior to or during Performance and Operational Testing.

D. Provide highly-qualified personnel who are knowledgeable about the project and the specific equipment and systems to perform demonstration and instruction of OWNER

personnel.

E. Operating Equipment and Systems: Demonstrate operation in all modes, including start-up, shut-down, seasonal changeover, emergency conditions, and troubleshooting, and maintenance procedures, including scheduled and preventive maintenance.

F. Utilize operation and maintenance manuals as basis for demonstration training.

G. Non-Operating Products: Demonstrate cleaning, scheduled and preventive maintenance, and repair procedures.

3.02 CLASSROOM TRAINING

A. Engineer will prepare the Training Plan based on draft plans submitted by Contractor.

B. Conduct training on-site unless otherwise indicated.

C. City of Missoula will provide classroom and seating at no cost to Contractor.

D. Do not start training until Pre-functional Testing is complete, unless otherwise specified or approved by the Engineer.

E. Provide training in minimum two hour segments.

F. Training schedule will be subject to availability of City of Missoula's personnel to be trained; re-schedule training sessions as required by City of Missoula; once schedule has been approved by City of Missoula failure to conduct sessions according to schedule will be cause for City of Missoula to charge Contractor for personnel "show-up" time.

G. Review of Facility Policy on Operation and Maintenance Data: During training discuss:

1. The location of the O&M manuals and procedures for use and preservation; backup copies.
2. Typical contents and organization of all manuals, including explanatory information, system narratives, and product specific information.
3. Typical uses of the O&M manuals.

H. Product- and System-Specific Training:

1. Review the applicable O&M manuals.
2. For systems, provide an overview of system operation, design parameters and constraints, and operational strategies.
3. Review instructions for proper operation in all modes, including start-up, shut-down, seasonal changeover and emergency procedures, and for maintenance, including preventative maintenance.
4. Provide hands-on training on all operational modes possible and preventive maintenance.
5. Emphasize safe and proper operating requirements; discuss relevant health and safety issues and emergency procedures.
6. Discuss common troubleshooting problems and solutions.

7. Discuss any peculiarities of equipment installation or operation.
8. Discuss warranties and guarantees, including procedures necessary to avoid voiding coverage.
9. Review recommended tools and spare parts inventory suggestions of manufacturers.
10. Review spare parts and tools required to be furnished by Contractor.
11. Review spare parts suppliers and sources and procurement procedures.

I. Be prepared to answer questions raised by training attendees; if unable to answer during training session, provide written response within three days.

END OF SECTION 01 79 00

SECTION 01 91 00
COMMISSIONING

PART 1 - GENERAL

1.01 SUMMARY

A. Requirements for functional testing, performance and operational testing, and commissioning of equipment and systems.

B. Description of the commissioning process and responsibilities common to all parties.

C. Commissioning, including Functional Tests, performance and operational testing, O&M documentation review, and training, is to occur after startup and initial checkout and be completed before Substantial Completion

1.02 SCOPE OF COMMISSIONING

A. The following are to be commissioned:

1. Plumbing Systems
2. HVAC Systems
3. Special Ventilation
4. Electrical Systems
5. Electronic Safety and Security
6. Process Integration Equipment
7. Process Interconnections
8. Material Processing and Handling Equipment
9. Process Gas and Liquid Handling Equipment
10. Water and Wastewater Equipment
11. Other equipment and systems identified elsewhere in Contract Documents as requiring commissioning.

B. The commissioning process will be directed by the Contractor and monitored by the Engineer.

C. Commissioning during the construction phase is intended to achieve the following specific objectives according to the Contract Documents:

1. Verify applicable equipment and systems are installed according to the manufacturer's recommendations and to industry accepted minimum standards and that they receive adequate operational checkout by installing contractors.
2. Verify and document proper performance of equipment and systems
3. Verify that O&M documentation is complete.
4. Verify that Owner's operating personnel are adequately trained.

1.03 RELATED REQUIREMENTS

A. Section 01 75 00 - Starting and Adjusting

B. Section 01 78 23 - Operation and Maintenance Data

C. Section 01 79 00 - Classroom and Demonstration Training

1.04 SUBMITTALS

A. Manufacturers' Instructions: Submit copies of all manufacturer-provided instructions that are shipped with the equipment as soon as the equipment is delivered.

B. Product Data: If submittals to Engineer do not include the following, submit copies as soon as possible:

1. Manufacturer's product data, cut sheets, and shop drawings.
2. Manufacturer's installation instructions.
3. Startup, operating, and troubleshooting procedures.
4. Fan and pump curves.
5. Factory test reports.
6. Warranty information, including details of City of Missoula's responsibilities in regard to keeping warranties in force.

C. Startup Plans and Reports.

D. Completed Checklists.

E. Commissioning Plan.

F. Commissioning Reports.

1.05 DEFINITIONS

A. Commissioning Plan: An overall plan, developed by the Contractor in conjunction with Owner and Engineer, that provides the structure, schedule, and coordination planning for the commissioning process.

B. Functional Tests (FT): Test of the dynamic function and operation of equipment and systems using manual (direct observation) and/or remote monitoring methods. Functional testing is the dynamic testing of systems (rather than just components) under full operations. Systems are tested under various modes, such as during low cooling or heating loads, high loads, component failures, unoccupied, varying temperatures, alarm, power failure, local/remote, etc. FTs are performed after prefunctional tests and startups are completed.

C. Performance and Operational Testing (POT): Test of systems after written acceptance of the FT. The POT test period will be used develop adequate process conditions to fully establish compliance with the performance requirements of the Contract Documents. Contractor shall supervise, control and be responsible for the operation and maintenance of equipment and systems during POT providing qualified and appropriately licensed personnel.

PART 2 - PRODUCTS

2.01 TEST EQUIPMENT

A. Provide all standard testing equipment required to perform startup and initial checkout and required Functional Testing; unless otherwise noted such testing equipment will not become the property of City of Missoula.

B. Calibration Tolerances: Provide testing equipment of sufficient quality and accuracy to test and/or measure system performance with the tolerances specified. If not otherwise noted, the following minimum requirements apply:

1. Temperature Sensors and Digital Thermometers: Certified calibration within past year to accuracy of 0.5 degree F and resolution of plus/minus 0.1 degree F.

2. Pressure Sensors: Accuracy of plus/minus 2.0 percent of the value range being measured (not full range of meter), calibrated within the last year.

3. Calibration: According to the manufacturer's recommended intervals and when dropped or damaged; affix calibration tags or keep certificates readily available for inspection.

C. Equipment-Specific Tools: Where special testing equipment, tools and instruments are specific to a piece of equipment, are only available from the vendor, and are required in order to accomplish startup or Functional Testing, provide such equipment, tools, and instruments as part of the work at no extra cost to City of Missoula; such equipment, tools, and instruments are to become the property of City of Missoula.

D. Dataloggers: Independent equipment and software for monitoring flows, currents, status, pressures, etc. of equipment.

1. Dataloggers required to for Functional Tests will be provided by the Contractor and will not become the property of [].

PART 3 - EXECUTION

3.01 MANUFACTURERS' FIELD SERVICES

A. If a factory-authorized service representative is required to inspect field-assembled components and equipment installation, comply with qualifications requirements in Division 1 Section "Quality Requirements" and manufacturer shall provide field services for:

1. starting and operating components to confirm proper operation. Remove malfunctioning units, replace with new units, and retest.

2. Adjusting operating components for proper operation without binding. Adjust equipment for proper operation.

3. Testing each piece of equipment to verify proper operation. Test and adjust controls and safeties. Replace damaged and malfunctioning controls and equipment.

3.02 COMMISSIONING PLAN

A. The Contractor will develop the Commissioning Plan with input from the Owner and Engineer.

1. Engineer to attend meetings called by the Contractor for purposes of completing the commissioning plan.
2. Require attendance and participation of relevant subcontractors, installers, suppliers, and manufacturer representatives.

B. Contractor is responsible for compliance with the Commissioning Plan.

C. Commissioning Schedule:

1. Submit anticipated dates of startup of each item of equipment and system to Engineer within 60 days after award of Contract.
2. Re-submit anticipated startup dates monthly, but not less than 4 weeks prior to startup.
3. Prefunctional Checklists and Functional Tests are to be performed in sequence from components, to subsystems, to systems.
4. Provide sufficient notice to Engineer for delivery of relevant Checklists and Functional Test procedures, to avoid delay.

3.03 STARTUP PLANS AND REPORTS

A. Startup Plans: For each item of equipment and system for which the manufacturer provides a startup plan, submit the plan not less than 8 weeks prior to startup.

B. Startup Reports: For each item of equipment and system for which the manufacturer provides a startup checklist (or startup plan or field checkout sheet), document compliance by submitting the completed startup checklist prior to startup, signed and dated by responsible entity.

C. Submit directly to the Engineer.

3.04 FUNCTIONAL TESTS

A. Functional Test is required for each item of equipment, system, or other assembly specified to be commissioned, unless sampling of multiple identical or near- identical units is allowed by the final test procedures.

B. Contractor is responsible for execution of required Functional Tests, after completion of Prefunctional Checklist and before Substantial Completion.

C. Engineer will witness Functional Tests, Contractor shall provide adequate notice to Engineer in advance of functional testing.

D. Contractor is responsible for correction of deficiencies and re-testing at no extra cost to City of Missoula; if a deficiency is not corrected and re-tested immediately, the Engineer will document the deficiency and the Contractor's stated intentions regarding correction.

1. Deficiencies are any condition in the installation or function of a component, piece of equipment or system that is not in compliance with the Contract Documents or does not perform properly.
2. When the deficiency has been corrected, the Contractor completes the form certifying that the item is ready to be re-tested and returns the form to the Engineer; the

Contractor will reschedule the test and the Contractor shall re-test.

3. Identical or Near-Identical Items: If 10 percent, or three, whichever is greater, of identical or near-identical items fail to perform due to material or manufacturing defect, all items will be considered defective; provide a proposal for correction within 2 weeks after notification of defect, including provision for testing sample installations prior to replacement of all items.
4. Contractor shall bear the cost of City of Missoula and Engineer's personnel time witnessing re-testing.

E. Functional Test Procedures:

1. Some test procedures are included in the Contract Documents; where Functional Test procedures are not included in the Contract Documents, test procedures will be determined by the Engineer and Contractor.
2. Traditional air or water test and balancing (TAB) is not Functional Testing; spot checking of TAB by demonstration to the Engineer is Functional Testing.

F. Deferred Functional Tests: Some tests may need to be performed later, after substantial completion, due to partial occupancy, equipment, seasonal requirements, design or other site conditions; performance of these tests remains the Contractor's responsibility regardless of timing.

3.05 FUNCTIONAL TEST PROCEDURES – GENERAL

A. Provide skilled technicians to execute starting of equipment and to execute the Functional Tests. Ensure that they are available and present during the agreed upon schedules and for sufficient duration to complete the necessary tests, adjustments and problem-solving.

B. Provide all necessary materials and system modifications required to produce the flows, pressures, temperatures, and conditions necessary to execute the test according to the specified conditions. At completion of the test, return all affected equipment and systems to their pre-test condition.

C. Manual Testing: Use hand-held instruments, immediate control system readouts, or direct observation to verify performance (contrasted to analyzing monitored data taken over time to make the “observation”).

D. Simulating Conditions: Artificially create the necessary condition for the purpose of testing the response of a system; for example apply hot air to a space sensor using a hair dryer to see the response in a VAV box.

E. Simulating Signals: Disconnect the sensor and use a signal generator to send an amperage, resistance or pressure to the transducer and control system to simulate the sensor value.

F. Over-Writing Values: Change the sensor value known to the control system in the control system to see the response of the system; for example, change the outside air temperature value from 50 degrees F to 75 degrees F to verify economizer operation.

G. Indirect Indicators: Remote indicators of a response or condition, such as a reading from a control system screen reporting a damper to be 100 percent closed, are considered indirect

indicators.

H. Monitoring: Record parameters (flow, current, status, pressure, etc.) of equipment operation using dataloggers or the trending capabilities of the relevant control systems; where monitoring of specific points is called for in Functional Test Procedures:

1. All points that are monitored by the relevant control system shall be trended by Contractor; at the Engineer's request, Contractor shall trend up to 20 percent more points than specified at no extra charge.
2. Other points will be monitored by the Contractor using dataloggers.
3. At the option of the Engineer, some control system monitoring may be replaced with datalogger monitoring.
4. Provide hard copies of monitored data in columnar format with time down left column and at least 5 columns of point values on same page.
5. Graphical output is desirable and is required for all output if the system can produce it.
6. Monitoring may be used to augment manual testing.

3.06 PERFORMANCE AND OPERATIONAL TESTING

A. Contractor shall supervise, control, and be responsible for the operation and maintenance of the new equipment and/or system during a period of at least fifteen (15) days or until performance requirements are met, whichever is greater, after the written acceptance of the FT for each individual item that is placed into operation. The Contractor shall remain responsible for making required changes, repairs and replacements to the installation during this period. Final written acceptance of the equipment shall not be given until after fifteen (15) days of continuous successful operation.

B. The POT test period will be used develop adequate process conditions to fully establish compliance with the performance requirements of the Contract Documents. Included in this requirement, but not limited to, are the following:

1. Establishing and maintaining an adequate microbial population in the aeration system to meet NPDES permit limits.
2. Developing sufficient waste activated sludge to operate biosolids treatment, thickening and dewatering equipment.
3. Generating sufficient materials to verify operation of materials handling equipment such as grit handling systems, scum piping and thickened biosolids conveying equipment.

C. During the POT, the Contractor shall provide supervisory and appropriately licensed personnel satisfactory to the Engineer. It is the intent that during the POT period, the Owner's personnel will become completely familiar with the operation and maintenance of the systems undergoing POT. See Section 01 79 00 - Classroom and Demonstration Training for additional requirements.

D. During the POT, the Owner will arrange to have a complement of operating personnel available, and these operators will be paid by the Owner.

3.07 OPERATION AND MAINTENANCE MANUALS

A. See Section 01 78 23 for additional requirements.

B. Add design intent documentation furnished by ENGINEER to manuals prior to submission to City of Missoula.

C. Submit manuals related to items that were commissioned to Engineer for review; make changes recommended by Engineer.

D. Contractor will add commissioning records to manuals prior to submission back to City of Missoula.

END OF SECTION 01 91 00

DIVISION 2

EXISTING CONDITIONS, SITEWORK

SECTION 02 41 00
SITE DEMOLITION

PART 1 - GENERAL

1.01 RELATED DOCUMENTS

A. Drawings and Special Provisions of the Contract, including General and Supplementary Conditions and Division 1 Specifications Sections, apply to this Section.

1.02 SUMMARY

A. This Section includes the following:

1. Removal and disposal of all construction indicated on the plans or specified in these documents.
2. Removal and disposal of paving, curbing, sidewalks, driveways, crosswalks, utility structures, piping, below grade foundations, improvements to avoid conflict with new construction, disconnection, capping and removal of utilities no longer in use, pollution control during demolition including noise control and removal and legal disposal of materials.

B. Related Sections include the following:

1. Division 1 Section “Payment Procedures" for a schedule of unit prices.
2. Division 32 Section "Landscaping" for finish grading, including placing and preparing topsoil for lawns and plantings.
3. Division 31 Section “Earthwork” for excavation and embankment, site stripping, grubbing, removing topsoil, and protecting trees to remain.

1.03 SUBMITTALS

A. Schedule: Submit schedule indicating proposed methods and sequence of operations for selective demolition work to Engineer for review prior to commencement of work. Include coordination for shut-off, capping, and continuation of utility services as required, together with details for dust and noise control protection.

B. Provide detailed sequence of demolition and removal work to ensure uninterrupted progress of OWNER's on-site operations.

C. Coordinate with OWNER's continuing occupation of portions of existing building, and with OWNER's reduced usage of any portion thereof.

D. Submit project record documents under provisions of Section 01 77 00.

1.04 REGULATORY REQUIREMENTS

A. Conform to all applicable codes for worker safety, confined space entry, dust control, and water and sludge discharges and disposal.

B. Obtain required permits from authorities.

C. Notify affected utility companies before starting Work and comply with applicable requirements.

D. Do not close or obstruct roadways except as permitted by OWNER. Do not close or obstruct egress width to exits without prior written permission of OWNER.

E. Do not disrupt or compromise effectiveness of WWTF operations without written permission of OWNER.

F. Conform to procedures applicable if hazardous materials or situations discovered.

1.05 PROJECT CONDITIONS

A. Dust Control: The amount of dust resulting from demolition shall be controlled to prevent the spread of dust to occupied portions of the site or building and to avoid creation of a nuisance in the surrounding area. Use of water will not be permitted when it will result in, or create, hazardous or objectionable conditions such as ice, flooding, and pollution.

B. Protection of Existing Work: Before beginning any cutting or demolition work, the Contractor shall carefully survey the existing facilities and examine the plans and specifications to determine the extent of the work. The Contractor shall take all necessary precautions to ensure against damage to existing facilities to remain in place, to be reused, or to remain the property of the OWNER, and any damage to such work shall be repaired or replaced as approved by the Engineer at no additional cost to the OWNER. The Contractor shall carefully coordinate the work of this section with all other work and construct and maintain shoring, bracing and supports, as required.

C. Protection of Buildings from the Weather: The interior of buildings and all materials and equipment shall be protected from the weather at all times.

D. Protection of Trees: Trees which might be damaged during demolition and which are indicated to be left in place shall be protected. Any tree designated to remain that is damaged during the Work under this contract shall be replaced.

E. Burning: The use of burning at the project site for the disposal of refuse and debris will not be permitted.

F. Occupancy: OWNER will be continuously occupying areas of the building immediately adjacent to areas of selective demolition. Conduct selective demolition work in manner that will minimize need for disruption of OWNER's normal operations. Provide minimum of 72 hours advance notice to OWNER of demolition activities which will severely impact OWNER's normal operations.

G. Condition of Structures: OWNER assumes no responsibility for actual condition of items to be demolished.

1. Conditions existing at time of commencement of contract will be maintained by OWNER insofar as practicable. However, variations may occur by

OWNER's removal and salvage operations prior to start of selective demolition work.

H. Partial Demolition and Removal: Materials of marketable value that are removed in accordance with the provisions of the Project, but that are not to be possessed by the OWNER, shall become the property of the Contractor and shall be removed from the right-of-way. Transport salvaged items from site as they are removed.

   1. Storage or sale of removed items *on site* will not be permitted.

I. Protections: Provide temporary barricades and other forms of protection as required to protect OWNER's personnel and general public from injury due to selective demolition work.

   1. Confine Work and stockpiling to within OWNER's property or easement as approved by Engineer. Leave undisturbed all street and utility appurtenances not indicated for removal or renovation.
   2. Provide protective measures as required to provide free and safe passage of OWNER's personnel and general public to and from occupied portions of buildings.
   3. Provide interior and exterior shoring, bracing, or support to prevent movement, settlement, or collapse of element to be demolished, and adjacent facilities or work to remain.
   4. Protect from damage existing finish work that is to remain in place and becomes exposed during demolition operations.
   5. Protect floors with suitable covering when necessary.
   6. Construct temporary insulated solid dustproof partitions where required to separate areas where noisy or extensive dirt or dust operations are performed. Equip partitions with dustproof doors and security locks if required.
   7. Provide temporary weather protection during interval between demolition and removal of existing construction on exterior surfaces, and installation of new construction to insure that no water leakage or damage occurs.
   8. Maintain, during operation and at completion, pavement removal areas in such condition that they will be well drained at all times.
   9. Protect and maintain survey monuments or any construction staking from disturbance during pavement removal.

J. Damages: Promptly repair damages caused to adjacent facilities by demolition work at no cost to OWNER.

K. Explosives: Use of explosives will not be permitted.

L. Utility Services: Maintain existing utilities indicated to remain, keep in service, and protect against damage during demolition operations.

M. Do not interrupt existing utilities serving occupied or used facilities, except when authorized in writing by authorities having jurisdiction. Provide temporary services during interruptions to existing utilities as acceptable to governing authorities.

PART 2 - PRODUCTS (Not Used)

PART 3 - EXECUTION

3.01 INSPECTION

A. Prior to commencement of selective demolition work, inspect areas in which work will be performed. Photograph existing conditions to structure surfaces, equipment or to surrounding properties which could be misconstrued as damage resulting from selective demolition work; file with OWNER's Representative prior to starting work.

3.02 PREPARATION

A. Become familiar with required lines of removal and saw cutting.

B. Identify underground utilities.

C. Provide, erect, and maintain adequate barriers and warning lights.

D. Keep streets, sidewalks, and driveways in usable condition; avoid property OWNER inconvenience insofar as practicable; do not trespass on private property.

E. Verify traffic control in place prior to commencement of pavement removal.

F. Inspect and record existing conditions onsite and at adjacent areas prior to starting construction. Commencement of this Section's Work means acceptance of existing conditions.

3.03 PAVING REMOVAL

A. Saw cutting may be required on concrete and asphalt pavements. Pavement removal beyond the limits established in the notes on the Drawings shall be replaced at the Contractor's expense.

B. Saw cut vertically; remove on straight lines approximately parallel or perpendicular to centerline of pavement.

C. Saw cut vertically full depth to obtain a clean break. After saw cutting, use pneumatic jackhammer or similar device prior to breaking out pavement.

D. Break out remainder of pavement.

E. Disturbances, breakage, or damage to areas not designated for removal shall be restored at Contractor's expense prior to making final payment.

F. Leave underlying sub-base material in a condition suitable for traffic if construction sequence involves delays and if local situation requires access by the

public.

G. Pavement removed beyond the limits established shall be replaced to the same specifications as the adjacent removal at Contractor's expense.

3.04 TOLERANCES

A. Saw cut full depth to achieve a clean break.

B. If line of removal falls within 2 feet of an existing joint, adjust line of removal to be the existing joint.

C. Remove entire width of sidewalk if removal width is less than sidewalk width.

3.05 DEMOLITION

A. General: Remove and legally dispose of paving, curbing, sidewalks, driveways, crosswalks, utility structures, piping, below grade foundations, improvements to avoid conflict with new construction, disconnection, and capping and removal of utilities no longer in use.

1. Demolition of existing structures and piping shall only commence after provisions are made to ensure continuing existing utility services.

B. Structures: Existing structures indicated shall be completely removed to two feet below grade. The excavations shall be backfilled and final graded in accordance with other sections of these specifications.

C. Pavement: Cut, remove and dispose of existing pavement to the lines indicated on the plans or as directed by Engineer. Make straight and an approximately vertical cut of edges along which new pavement is to be placed.

D. Piping: Existing utilities shall be removed as indicated. When utility lines are encountered that are not indicated on the plans, the Engineer shall be notified. Buried piping may be left in place provided that exposed pipe ends are plugged.

1. Pipes shall be plugged with a low slump concrete the entire diameter of the pipe to a minimum depth of 18 inches.

E. Driveways and Sidewalks: Remove and dispose of existing concrete driveways and/or sidewalks which interfere with construction of improvements or which do not match new grade as shown on the contract documents or as directed by Engineer.

1. Remove to a distance of 8 inches behind curbs, or to greater distance if required to properly match the new curb and gutter grade.

2. Saw cut along a neat line to a depth of at least 25 percent of the concrete thickness and take care in removing the concrete assuring the slab breaks on the sawed neat line.

F. Filling: Excavations and other hazardous openings shall be filled in accordance with appropriate sections of these specifications.

3.06 DISPOSAL

A. General: Upon completion of demolition, all debris shall be disposed of in a legal manner, and the site shall be fine graded to the prevailing adjacent grades and contours.

3.07 SALVAGE

A. Title to Materials: Title to all materials and equipment to be demolished, excepting OWNER salvage and historical items, is vested in the Contractor upon receipt of Notice to Proceed. The OWNER will not be responsible for the condition, loss or damage to such property after Notice to Proceed.

B. Material for Contractor Salvage: Material for salvage by Contractor shall be stored as approved by the Engineer. Salvage materials shall be removed from OWNER's property before completion of the contract. Material for salvage shall not be sold on the site. Salvage material may not be reused in the project without written approval of the Engineer.

C. Unsalvageable Materials: Materials, other than those permitted to remain in place, shall be disposed of in a legal manner. On-site disposal will not be allowed.

END OF SECTION 02 41 00

SECTION 02 42 00
REMOVAL AND SALVAGE OF CONSTRUCTION MATERIALS

PART 1 - GENERAL

1.01 SUMMARY

A. Section Includes:

1. Removal and salvage of selected items from the Transitional Facility, Site Demolition and Structure Demolition.

B. Related sections include, but are not limited to:

1. Drawings and general provisions of Contract, including General and Supplementary Conditions and Division-1 Specification sections, apply to work of this section.
2. Section 02 41 00 – Demolition

PART 2 - PRODUCTS (Not Used)

PART 3 - EXECUTION

3.01 SALVAGE MATERIALS

A. Salvage Items: Where indicated on Drawings as "Salvage", carefully remove indicated items, clean, store and turn over to OWNER and obtain receipt.

B. Historic artifacts, including cornerstones and their contents, commemorative plaques and tablets, antiques, and other articles of historic significance remain the property of the OWNER. Notify OWNER's Representative if such items are encountered and obtain acceptance regarding method of removal and salvage for OWNER.

3.02 DISPOSAL OF DEMOLISHED MATERIALS

A. Remove debris, rubbish and other materials resulting from demolition operations from building site. Transport and legally dispose of materials off site.

1. If hazardous materials are encountered during demolition operations, comply with applicable regulations, laws, and ordinances concerning removal, handling and protection against exposure or environmental pollution.
2. Burning of removed materials is not permitted on project site.

END OF SECTION 02 42 00

DIVISION 3

CONCRETE

SECTION 03 10 00
CONCRETE FORMING AND ACCESSORIES

PART 1 - GENERAL

1.01 SUMMARY

A. Section Includes:
1. Formwork for cast-in-place concrete.
2. Shoring, bracing, and anchorage.
3. Form accessories.
4. Form stripping.

B. Related Requirements:
1. Section 03 20 00 - Concrete Reinforcing: Reinforcing steel and required supports for cast-in-place concrete.
2. Section 03 30 00 - Cast-in-Place Concrete: Cast-in-place or in-situ concrete for structural building frame, slabs-on-grade, and other concrete components associated with building.
3. Section 05 50 00 - Metal Fabrications: Product requirements for metal fabrications for placement by this Section.

1.02 REFERENCE STANDARDS

A. American Concrete Institute:
1. ACI 117 - Specification for Tolerances for Concrete Construction and Materials.
2. ACI 350 - Code Requirements for Environmental Engineering Concrete Structures.
3. ACI 350.5 - Specifications for Environmental Concrete Structures.
4. ACI 347 - Guide to Formwork for Concrete.

B. American Forest & Paper Association:
1. AF&PA - National Design Specification (NDS) for Wood Construction.

C. APA - The Engineered Wood Association:
1. APA/EWA PS 1 - Voluntary Product Standard - Structural Plywood.

D. ASTM International:
1. ASTM D1751 - Standard Specification for Preformed Expansion Joint Filler for Concrete Paving and Structural Construction (Nonextruding and Resilient Bituminous Types).

E. West Coast Lumber Inspection Bureau:
1. WCLIB - Standard No. 17 Grading Rules for West Coast Lumber.

1.03 COORDINATION

A. Coordinate Work of this Section with other Sections of Work in forming and placing openings, slots, recesses, sleeves, bolts, anchors, other inserts, and components of other Work.

1.04 SUBMITTALS

A. General Conditions, Art. 7.16 - Submittals: Requirements for submittals.

B. Shop Drawings:
   1. Indicate:
      a. Formwork, shoring, and reshoring.
      b. Pertinent dimensions, openings, methods of construction, types of connections, materials, joint arrangement and details, ties and shores, location of framing, studding and bracing, and temporary supports.
      c. Sequence and timing of erection and stripping, assumed compressive strength at time of stripping, height of lift, and height of drop during placement.
      d. Vertical, horizontal, and special loads according to ACI 347.
      e. Notes to formwork erector showing size and location of conduits and piping embedded in concrete according to ACI 350.
      f. Procedure and schedule for removal of shores and installation and removal of reshores.

C. Manufacturer's Certificate: Certify that products meet or exceed specified requirements.

D. Delegated Design Submittals:
   1. Submit signed and sealed Shop Drawings with design calculations and assumptions for formwork, shoring, and reshores.

E. Field Quality-Control Submittals: Indicate results of Contractor-furnished tests and inspections.

1.05 QUALITY ASSURANCE

A. Perform Work according to ACI 347, 350, and 350.5.

B. For wood products furnished for Work of this Section, comply with AF&PA.

1.06 QUALIFICATIONS

A. Licensed Professional: Professional engineer experienced in design of specified Work and licensed in State of Montana.

1.07 DELIVERY, STORAGE, AND HANDLING

A. Store materials off ground in ventilated and protected manner to prevent deterioration from moisture.

PART 2 - PRODUCTS

2.01 PERFORMANCE AND DESIGN CRITERIA

A. Design, engineer, and construct formwork, shoring, and bracing according to ACI 347, 350, and 350.5 to conform to design code requirements to achieve concrete shape, line, and dimension as indicated on Drawings.

2.02 WOOD FORM MATERIALS

A. Plywood Forms:
   1. Description:
      a. Comply with APA/EWA PS 1.
      b. Panels: Full size, 4 by 8 feet.
      c. Label each panel with grade trademark of APA/EWA.
      d. Minimum Thickness: 5/8 inch.
      e. Grade: APA/EWA "HD Overlay Plyform Structural I Exterior."

2.03 PREFABRICATED FORMS

A. Manufacturers:
   1. EFCO - Economy Forms Corp.
   2. Molded Fiber Glass Construction Products.
   3. Sonoco Products Co.
   4. Symons by Dayton Superior.
   5. Wall-Ties & Forms, Inc.
   6. Western Forms.

B. Preformed Steel Forms:
   1. Description: Matched, tightly fitted, and stiffened to support weight of concrete without deflection detrimental to tolerances and appearance of finished surfaces.
   2. Minimum Thickness: 16 gauge.

C. Framing, Studding, and Bracing: Stud.

2.04 FORMWORK ACCESSORIES

A. Form Ties:
   1. Type: Snap off; cone.
   2. Material: steel.
   3. Back Break Dimension: 1 inch.
   4. Free of defects capable of leaving holes larger than 1 inch in concrete surface.

5. Manufacturers:
    a. Heckmann Building Products, Inc.
    b. Symons by Dayton Superior.
    c. Wall-Ties & Forms, Inc.
    d. Substitutions: approved equal.

B. Spreaders:
1. Description: Standard, non-corrosive metal-form clamp assembly, of type acting as spreaders and leaving no metal within 1 inch of concrete face.
2. Wire ties, wood spreaders, or through bolts are not permitted.

C. Form Release Agent:
1. Description: Colorless mineral oil that will not stain concrete or absorb.
2. Manufacturers:
    a. Architectural Concrete Chemicals, LLC.
    b. Nox-Crete Products Group.
    c. Substitutions: approved equal.

D. Corners:
1. Type: Chamfer.
2. Size: 3/4 by 3/4 inches.
3. Lengths: Maximum possible.

E. Bituminous Joint Filler: Comply with ASTM D1751.

F. Cellular (Non-bituminous) Joint Filler: Filler material having a maximum compressive strength of 25 psi at 50% deformation per ASTM D1752:
1. W.R. Meadows Ceramar Flexible Foam Expansion Joint.
2. Or Approved Equal.

G. Nails, Spikes, Lag Bolts, Through Bolts, Anchorages: Size, strength, and character to maintain formwork in place while placing concrete.

PART 3 - EXECUTION

3.01 EXAMINATION

A. Verify lines, levels, and centers before proceeding with formwork.

B. Verify that dimensions agree with Drawings.

C. If formwork is placed after reinforcement resulting in insufficient concrete cover over reinforcement, request instructions from Engineer before proceeding.

3.02 INSTALLATION

A. Earth Forms: Not permitted.

B. Formwork:
   1. Provide top form for sloped surfaces steeper than 1.5 horizontal to 1 vertical to hold shape of concrete during placement, unless it can be demonstrated that top forms can be omitted.
   2. Construct forms to correct shape and dimensions, mortar-tight, braced, and of sufficient strength to maintain shape and position under imposed loads from construction operations.
   3. Camber forms where necessary to produce level finished soffits unless indicated otherwise on Drawings.
   4. Positioning:
      a. Carefully verify horizontal and vertical positions of forms.
      b. Correct misaligned or misplaced forms before placing concrete.
   5. Complete wedging and bracing before placing concrete.
   6. Erect formwork, shoring, and bracing to achieve design requirements according to ACI 350.
   7. Stripping:
      a. Arrange and assemble formwork to permit dismantling and stripping.
      b. Do not damage concrete during stripping.
      c. Permit removal of remaining principal shores.

   8. Obtain approval of Engineer before framing openings in structural members not indicated on Drawings.
   9. Install chamfer strips on external corners where indicated.
   10. Do not patch formwork.
   11. Leave forms in place for:
      a. Minimum number of days according to ACI 347 and Section 033000.

C. Form Removal:
   1. Do not remove wall forms or bracing until concrete has gained sufficient strength to carry its own weight and imposed loads, and removal has been approved by Engineer.
   2. Formed edges of shrinkage-compensating slabs shall have brace stakes and pins loosened after the final set of the concrete to accommodate the expansive action.
   3. Loosen forms carefully; do not wedge pry bars, hammers, or tools against finish concrete surfaces scheduled for exposure to view.
   4. Store removed forms in manner that surfaces to be in contact with fresh concrete will not be damaged.
   5. Discard damaged forms.
   6. Form Release Agent:
      a. Apply according to manufacturer instructions.
      b. Apply prior to placement of reinforcing steel, anchoring devices, and embedded items.
      c. Do not apply form release agent if concrete surfaces are indicated to receive special finishes or applied coverings that may be affected by agent.
      d. Soak inside surfaces of untreated forms with clean water, and keep surfaces coated prior to placement of concrete.

7. Form Cleaning:
    a. Clean forms as erection proceeds to remove foreign matter within forms.
    b. Clean formed cavities of debris prior to placing concrete.
    c. Flush with water or use compressed air to remove remaining foreign matter.
    d. Ensure that water and debris drain to exterior through cleanout ports.
    e. Cold Weather:
        1) During cold weather, remove ice and snow from within forms.
        2) Do not use de-icing salts.
        3) Do not use water to clean out forms, unless formwork and concrete construction proceed within heated enclosure; use compressed air or other dry method to remove foreign matter.
8. Reuse and Coating of Forms:
    a. Thoroughly clean forms and reapply form coating before each reuse.
    b. For exposed Work, do not reuse forms with damaged faces or edges.
    c. Apply form coating to forms according to manufacturer instructions.
    d. Do not coat forms for concrete indicated to receive "scored finish."
    e. Apply form coatings before placing reinforcing steel.

D. Forms for Smooth Finish Concrete:
1. Use either steel or plywood.
2. Use clean and smooth plywood, uniform in size, and free from surface and edge damage capable of affecting resulting concrete finish.
3. Use full-sized sheets of plywood wherever possible.
4. Tape joints to prevent protrusions in concrete.
5. Apply forming and strip wood forms in a manner to protect corners and edges.
6. Level and continue horizontal joints.
7. Keep wood forms wet until stripped.

E. Framing, Studding, and Bracing:

1. Maximum Spacing of Studs:
    a. Boards: Maximum 16 inches o.c.
    b. Plywood: 12 inches o.c.
2. Size framing, bracing, centering, and supporting members for sufficient strength to maintain shape and position under imposed loads from construction operations.
3. Distribute bracing loads over base area on which bracing is erected.
4. When placed on ground, protect against undermining, settlement, and accidental impact.

F. Form Anchors and Hangers:
1. Do not use anchors and hangers leaving exposed metal at concrete surface.
2. Symmetrically arrange hangers supporting forms from structural-steel members to minimize twisting or rotation of member.
3. Penetration of structural-steel members is not permitted.

G. Inserts, Embedded Parts, and Openings:
   1. Install formed openings for items to be embedded in or passing through concrete Work.
   2. Locate and set in place items required to be cast directly into concrete.
   3. Install accessories straight, level, and plumb, and ensure that items are not disturbed during concrete placement.
   4. Openings:
      a. Provide temporary ports or openings in formwork as required to facilitate cleaning and inspection.
      b. Locate openings at bottom of forms to allow flushing water to drain.

   5. Close temporary openings with tight-fitting panels, flush with inside face of forms, and neatly fitted such that joints will not be apparent in exposed concrete surfaces.

H. Form Ties:
   1. Provide sufficient strength and quantity to prevent spreading of forms.
   2. Space form ties equidistant, symmetrical, and aligned vertically and horizontally unless indicated otherwise on Drawings.

I. Arrange formwork to allow proper erection sequence and to permit form removal without damage to concrete.

J. Construction Joints:
   1. Install surfaced pouring strip where construction joints intersect on exposed surfaces to provide straight line at joints.
   2. Just prior to subsequent concrete placement, remove strip and tighten forms to conceal shrinkage.
   3. Appearance:
      a. Show no overlapping of construction joints.
      b. Construct joints to present same appearance as butted plywood joints.
   4. Arrange joints in continuous line straight, true, and sharp.

K. Embedded Items:
   1. Make provisions for pipes, sleeves, anchors, inserts, and other features.
   2. Do not embed wood or uncoated aluminum in concrete.
   3. Obtain installation and setting information for embedded items furnished under other Sections.
   4. Securely anchor embedded items in correct location and alignment prior to placing concrete.
   5. Ensure that conduits and pipes, including those made of coated aluminum, meet requirements of ACI 350 regarding size and location limitations.

L. Openings for Items Passing through Concrete:

   1. Frame openings in concrete where indicated on Drawings.

2. Establish exact locations, sizes, and other conditions required for openings and attachment of Work specified under other Sections.
3. Coordinate Work to avoid cutting and patching of concrete after placement.
4. Perform cutting and repairing of concrete required as result of failure to provide required openings.

M. Screeds:

1. Set screeds and establish levels for tops of and finish on concrete slabs.
2. Slope slabs to drain where required or as indicated on Drawings.
3. Before depositing concrete, remove debris from space to be occupied by concrete and thoroughly wet forms; remove freestanding water.

N. Cleanouts and Access Panels:

1. Provide removable cleanout sections or access panels at bottoms of forms to permit inspection and effective cleaning of loose dirt, debris, and waste material.
2. Clean forms and surfaces against which concrete is to be placed.
3. Remove chips, sawdust, and other debris.
4. Thoroughly blow out forms with compressed air just before concrete is placed.

3.03 TOLERANCES

A. Tolerances: Construct formwork to produce completed concrete surfaces within construction tolerances according to ACI 117.

B. Camber:
1. According to ACI 350.5.

3.04 FIELD QUALITY CONTROL

A. See Division 1 for requirements for inspecting and testing.

B. Inspection:
1. Inspect erected formwork, shoring, and bracing to ensure that Work complies with formwork design and that supports, fastenings, wedges, ties, and items are secure.
2. Notify Engineer after placement of reinforcing steel in forms but prior to closing of formwork.
3. Schedule concrete placement to permit formwork inspection before placing concrete.

END OF SECTION 03 10 00

SECTION 03 20 00
CONCRETE REINFORCING

PART 1 - GENERAL

1.01 RELATED DOCUMENTS

A. Drawings and general provisions of the Contract, including General and Supplementary Conditions and Division 01 Specification Sections, apply to this Section.

1.02 SUMMARY

A. Section Includes:
   1. Steel reinforcement bars.

1.03 ACTION SUBMITTALS

A. Product Data: For the following:
   1. Each type of steel reinforcement.
   2. Bar supports.

B. Shop Drawings: Comply with ACI SP-066:
   1. Include placing drawings that detail fabrication, bending, and placement.
   2. Include bar sizes, lengths, materials, grades, bar schedules, stirrup spacing, bent bar diagrams, bar arrangement, location of splices, lengths of lap splices, details of mechanical splice couplers, details of welding splices, tie spacing, hoop spacing, and supports for concrete reinforcement.

C. Construction Joint Layout: Indicate proposed construction joints required to build the structure.
   1. Location of construction joints is subject to approval of the Engineer.

1.04 INFORMATIONAL SUBMITTALS

A. Minutes of preinstallation conference.

1.05 DELIVERY, STORAGE, AND HANDLING

A. Steel Reinforcement: Deliver, store, and handle steel reinforcement to prevent bending and damage.
   1. Store reinforcement to avoid contact with earth.

PART 2 - PRODUCTS

2.01 STEEL REINFORCEMENT

A. Reinforcing Bars: ASTM A615/A615M, Grade, deformed, uncoated.

2.02 REINFORCEMENT ACCESSORIES

A. Joint Dowel Bars: ASTM A615/A615M, Grade 60, cut true to length with ends square and free of burrs.
   1. Provide plain-steel bars unless noted otherwise in drawings.
   2. Provide hot-dip zinc coating, ASTM A153/A153M, Class B at locations indicated to be galvanized in drawings.
   3. Provide dowel basket holders, as manufactured by:
      a. PNA Construction Technologies (www.pna-inc.com);
      b. SureBuilt Concrete Froms & Accessories (www.surebuilt-usa.com);
      c. Approved Equal.

B. Bar Supports: Bolsters, chairs, spacers, and other devices for spacing, supporting, and fastening reinforcing bars and welded-wire reinforcement in place.

   1. Manufacture bar supports from stainless steel wire, plastic, or precast concrete in accordance with CRSI's "Manual of Standard Practice" and ACI 315, and as follows:
      a. Where legs of wire bar supports contact forms, use CRSI Class 1 plastic-protected steel wire, all-plastic bar supports, or CRSI Class 2 stainless steel bar supports.
         1) For plastic protected wire, plastic shall have a thickness of 3/32 inches or greater at points of contract with formwork and the plastic shall extend along the wire at least 1/2 inches from the point of contact with the formwork.
         2) For stainless steel protected wire-reinforcement supports, the non-stainless steel portion of the supports shall not extend closer than 3/4 inches from the form surface.
      b. Precast concrete (adobes) shall, as a minimum, be no less in compressive strength or cement content than the concrete in which it will be cast, and a surface area of not less than 4 square inches. Water absorption and porosity of precast concrete supports shall be equal to or less than water absorption and porosity of concrete being placed. Adobes manufactured from plastic or with low cement contents will not be accepted. Brick, broken concrete masonry units, spalls, rocks or similar materials shall not be used for support of reinforcing steel.
      c. All-plastic reinforcement supports shall incorporate perforations in plane areas to compensate for the difference in the coefficient of thermal expansion between the plastic and concrete.

C. Steel Tie Wire: ASTM A1064/A1064M, annealed steel, not less than 0.0508 inch in diameter.
   1. Finish: Plain.

2.03 FABRICATING REINFORCEMENT

A. Fabricate steel reinforcement according to CRSI's "Manual of Standard Practice."

PART 3 - EXECUTION

3.01 PREPARATION

A. Clean reinforcement of loose rust and mill scale, earth, ice, and other foreign materials that reduce bond to concrete.

3.02 INSTALLATION OF STEEL REINFORCEMENT

A. Comply with CRSI's "Manual of Standard Practice" for placing and supporting reinforcement.

B. Accurately position, support, and secure reinforcement against displacement.
   1. Locate and support reinforcement with bar supports to maintain minimum concrete cover.
   2. Do not tack weld crossing reinforcing bars.

C. Preserve clearance between bars of not less than 1 inch, not less than one bar diameter, or not less than 1-1/3 times size of large aggregate, whichever is greater.

D. Provide concrete coverage in accordance with ACI 350.

E. Set wire ties with ends directed into concrete, not toward exposed concrete surfaces.

F. Splices: Lap splices as indicated on Drawings.
   1. Bars indicated to be continuous, and all vertical bars shall be lapped not less than 36 bar diameters at splices, or 24 inches, whichever is greater.
   2. Stagger splices in accordance with ACI 350.

3.03 JOINTS

A. Construction Joints: Install so strength and appearance of concrete are not impaired, at locations indicated or as approved by Engineer.
   1. Place joints perpendicular to main reinforcement.
   2. Continue reinforcement across construction joints unless otherwise indicated.

B. Doweled Joints: Install dowel bars and support assemblies at joints where indicated. Lubricate or asphalt coat one-half of dowel length, to prevent concrete bonding to one side of joint.

3.04 INSTALLATION TOLERANCES

A. Comply with ACI 117 and ACI 350.

3.05 FIELD QUALITY CONTROL

A. Testing Agency: Owner will engage a qualified inspecting agency to perform inspections and to submit reports.

B. Inspections:
   1. Steel-reinforcement placement.
   2. Reinforcing support type, spacing, and quantity of reinforcing supports.

END OF SECTION 03 20 00

SECTION 03 30 00
CAST-IN-PLACE CONCRETE

PART 1 - GENERAL

1.01 RELATED DOCUMENTS

A. Drawings and general provisions of the Contract, including General and Supplementary Conditions and Division 01 Specification Sections, apply to this Section.

1.02 SUMMARY

A. Section Includes:
1. Installation of concrete to provide footings, foundations, slabs on grade, and other incidental concrete Work.
2. Concrete pads for mechanical equipment.
3. Furnishing and installation of admixtures.
4. Work of other trades required to be built into concrete, such as inserts for connections to steel members, water-stops, anchors, embedded plates, and reinforcing dowels.
5. Finishing of concrete as specified herein or as indicated on Drawings.

B. Related Requirements:
1. MPWSS Section 02235 "Crushed Base Course" for drainage fill under slabs-on-ground.
2. MPWSS Section 02529 "Concrete Sidewalks, Driveways, Approaches, Curb Turn Fillets, Valley Gutters and Miscellaneous New Concrete Construction" for concrete pavement and walks.
3. Section 03100 "Concrete Forming and Accessories" for form-facing materials.
4. Section 03200 "Concrete Reinforcing" for steel reinforcing bars and welded-wire reinforcement.

1.03 DEFINITIONS

A. Cementitious Materials: Portland cement alone or in combination with one or more of the following: blended hydraulic cement, fly ash, slag cement, other pozzolans, and silica fume; materials subject to compliance with requirements.

B. Water/Cement Ratio (w/cm): The ratio by weight of water to cementitious materials.

1.04 REFERENCE STANDARDS

A. American Concrete Institute:
1. ACI 117 (117M) - Specification for Tolerances for Concrete Construction and Materials.
2. ACI 228.1R - Report on Methods for Estimating In-Place Concrete Strength.
3. ACI 301 - Specifications for Structural Concrete.

4. ACI 302.1R - Guide for Concrete Floor and Slab Construction.
5. ACI 305R - Guide to Hot Weather Concreting.
6. ACI 305.1 - Specification for Hot Weather Concreting.
7. ACI 306.1 - Standard Specification for Cold Weather Concreting.
8. ACI 306R - Guide to Cold Weather Concreting.
9. ACI 308.1 - Specification for Curing Concrete.
10. ACI 318 - Building Code Requirements for Structural Concrete.
11. ACI 350.5 - Specifications for Environmental Concrete Structures.

B. ASTM International:
1. ASTM C31/C31M - Standard Practice for Making and Curing Concrete Test Specimens in the Field.
2. ASTM C33/C33M - Standard Specification for Concrete Aggregates.
3. ASTM C39/C39M - Standard Test Method for Compressive Strength of Cylindrical Concrete Specimens.
4. ASTM C42/C42M - Standard Test Method for Obtaining and Testing Drilled Cores and Sawed Beams of Concrete.
5. ASTM C94/C94M - Standard Specification for Ready-Mixed Concrete.
6. ASTM C143/C143M - Standard Test Method for Slump of Hydraulic-Cement Concrete.
7. ASTM C150/C150M - Standard Specification for Portland Cement.
8. ASTM C171 - Standard Specification for Sheet Materials for Curing Concrete.
9. ASTM C172/C172M - Standard Practice for Sampling Freshly Mixed Concrete.
10. ASTM C173/C173M - Standard Test Method for Air Content of Freshly Mixed Concrete by the Volumetric Method.
11. ASTM C231/C231M - Standard Test Method for Air Content of Freshly Mixed Concrete by the Pressure Method.
12. ASTM C260/C260M - Standard Specification for Air-Entraining Admixtures for Concrete.
13. ASTM C309 - Standard Specification for Liquid Membrane-Forming Compounds for Curing Concrete.
14. ASTM C494/C494M - Standard Specification for Chemical Admixtures for Concrete.
15. ASTM C595/C595M - Standard Specification for Blended Hydraulic Cements.
16. ASTM C618 - Standard Specification for Coal Fly Ash and Raw or Calcined Natural Pozzolan for Use in Concrete.
17. ASTM C685/C685M - Standard Specification for Concrete Made by Volumetric Batching and Continuous Mixing.
18. ASTM C989/C989M - Standard Specification for Slag Cement for Use in Concrete and Mortars.
19. ASTM C1017/C1017M - Standard Specification for Chemical Admixtures for Use in Producing Flowing Concrete.
20. ASTM C1059/C1059M - Standard Specification for Latex Agents for Bonding Fresh to Hardened Concrete.
21. ASTM C1064/C1064M - Standard Test Method for Temperature of Freshly Mixed Hydraulic-Cement Concrete.

22. ASTM C1074 - Standard Practice for Estimating Concrete Strength by the Maturity Method.
23. ASTM C1077 - Standard Practice for Agencies Testing Concrete and Concrete Aggregates for Use in Construction and Criteria for Testing Agency Evaluation.
24. ASTM C1107/C1107M - Standard Specification for Packaged Dry, Hydraulic-Cement Grout (Nonshrink).
25. ASTM C1157/C1157M - Standard Performance Specification for Hydraulic Cement.
26. ASTM C1218/C1218M - Standard Test Method for Water-Soluble Chloride in Mortar and Concrete.
27. ASTM C1240 - Standard Specification for Silica Fume Used in Cementitious Mixtures.
28. ASTM C1260 - Standard Test Method for Potential Alkali Reactivity of Aggregates (Mortar-Bar Method).
29. ASTM C1293 - Standard Test Method for Determination of Length Change of Concrete Due to Alkali-Silica Reaction.
30. ASTM C1315 - Standard Specification for Liquid Membrane-Forming Compounds Having Special Properties for Curing and Sealing Concrete.
31. ASTM C1567 - Standard Test Method for Determining the Potential Alkali-Silica Reactivity of Combinations of Cementitious Materials and Aggregate (Accelerated Mortar-Bar Method).
32. ASTM C1602/C1602M - Standard Specification for Mixing Water Used in the Production of Hydraulic Cement Concrete.
33. ASTM C1778 - Standard Guide for Reducing the Risk of Deleterious Alkali-Aggregate Reaction in Concrete.
34. ASTM D994/D994M - Standard Specification for Preformed Expansion Joint Filler for Concrete (Bituminous Type).
35. ASTM D1751 - Standard Specification for Preformed Expansion Joint Filler for Concrete Paving and Structural Construction (Nonextruding and Resilient Bituminous Types).
36. ASTM D1752 - Standard Specification for Preformed Sponge Rubber, Cork and Recycled PVC Expansion Joint Fillers for Concrete Paving and Structural Construction.
37. ASTM D6690 - Standard Specification for Joint and Crack Sealants, Hot Applied, for Concrete and Asphalt Pavements.
38. ASTM E154/E154M - Standard Test Methods for Water Vapor Retarders Used in Contact with Earth Under Concrete Slabs, on Walls, or as Ground Cover.
39. ASTM E329 - Standard Specification for Agencies Engaged in Construction Inspection, Testing, or Special Inspection.
40. ASTM E1643 - Standard Practice for Selection, Design, Installation, and Inspection of Water Vapor Retarders Used in Contact with Earth or Granular Fill Under Concrete Slabs.
41. ASTM E1745 - Standard Specification for Plastic Water Vapor Retarders Used in Contact with Soil or Granular Fill under Concrete Slabs.
42. ASTM E1993/E1993M - Standard Specification for Bituminous Water Vapor Retarders Used in Contact with Soil or Granular Fill Under Concrete Slabs.

C. National Ready Mixed Concrete Association (NRMCA):
   1. NRMCA - Certification of Ready Mixed Concrete Production Facilities.

1.05 PREINSTALLATION MEETINGS

A. Preinstallation Conference: Conduct conference at Project site.
   1. Require representatives of each entity directly concerned with cast-in-place concrete to attend, including the following:
      a. Contractor's superintendent.
      b. Independent testing agency responsible for concrete design mixtures.
      c. Ready-mix concrete manufacturer.
      d. Concrete Subcontractor.
      e. Formwork Contractor.
   2. Review the following:
      a. Special inspection and testing and inspecting agency procedures for field quality control.
      b. Construction joints, control joints, isolation joints, and joint-filler strips.
      c. Cold and hot weather concreting procedures.
      d. Concrete finishes and finishing.
      e. Curing procedures.
      f. Forms and form-removal limitations.
      g. Shoring procedures.
      h. Concrete repair procedures.
      i. Concrete protection.
      j. Initial curing and field curing of field test cylinders (ASTM C31/C31M.)
      k. Protection of field cured field test cylinders.

1.06 ACTION SUBMITTALS

A. Product Data: For each of the following.
   1. Portland cement.
   2. Fly ash.
   3. Slag cement.
   4. Blended hydraulic cement.
   5. Silica fume.
   6. Aggregates.
   7. Admixtures:
      a. Include limitations of use, including restrictions on cementitious materials, supplementary cementitious materials, air entrainment, aggregates, temperature at time of concrete placement, relative humidity at time of concrete placement, curing conditions, and use of other admixtures.
   8. Curing materials.
   9. Joint fillers.
   10. Repair materials.

B. Design Mixtures: For each concrete mixture, include the following:
   1. Mixture identification.

2. Minimum 28-day compressive strength.
3. Durability exposure class.
4. Maximum w/cm.
5. Calculated equilibrium unit weight, for lightweight concrete.
6. Slump limit.
7. Air content.
8. Nominal maximum aggregate size.
9. Indicate amounts of mixing water to be withheld for later addition at Project site if permitted.
10. Include certification that dosage rate for permeability-reducing admixture matches dosage rate used in performance compliance test.
11. Intended placement method.
12. Submit alternate design mixtures when characteristics of materials, Project conditions, weather, test results, or other circumstances warrant adjustments.

C. Shop Drawings: Placing Drawings that detail fabrication, bending, and placement of steel reinforcement. Include bar sizes, lengths, material, grade, bar schedules, stirrup spacing, bent bar diagrams, bar arrangement, splices and laps, mechanical connections, tie spacing, hoop spacing, and supports for concrete reinforcement.

D. Concrete Schedule: For each location of each Class of concrete indicated in "Concrete Mixtures" Article, including the following:
1. Concrete Class designation.
2. Location within Project.
3. Exposure Class designation.
4. Formed Surface Finish designation and final finish.
5. Final finish for floors.
6. Curing process.
7. Floor treatment if any.

1.07 INFORMATIONAL SUBMITTALS

A. Qualification Data: For the following:
1. Installer: Include copies of applicable ACI certificates.
2. Ready-mixed concrete manufacturer.
3. Testing agency: Include copies of applicable ACI certificates.

B. Material Certificates: For each of the following, signed by manufacturers:
1. Cementitious materials.
2. Admixtures.
3. Curing compounds.
4. Bonding agents.
5. Adhesives.
6. Joint-filler strips.
7. Repair materials.

C. Material Test Reports: For the following, from a qualified testing agency:

1. Portland cement.
2. Fly ash.
3. Slag cement.
4. Blended hydraulic cement.
5. Silica fume.
6. Aggregates.
7. Admixtures:

D. Research Reports:
1. For concrete admixtures in accordance with ICC's Acceptance Criteria AC198.

E. Preconstruction Test Reports: For each mix design.

F. Field quality-control reports.

G. Minutes of preinstallation conference.

1.08 QUALITY ASSURANCE

A. Installer Qualifications: A qualified installer who employs Project personnel qualified as an ACI-certified Flatwork Technician and Finisher and a supervisor who is a certified ACI Flatwork Concrete Finisher/Technician or an ACI Concrete Flatwork Technician.
1. Post-Installed Concrete Anchors Installers: ACI-certified Adhesive Anchor Installer.

B. Ready-Mixed Concrete Manufacturer Qualifications: A firm experienced in manufacturing ready-mixed concrete products and that complies with ASTM C94/C94M requirements for production facilities and equipment.
1. Manufacturer certified in accordance with NRMCA's "Certification of Ready Mixed Concrete Production Facilities."

C. Laboratory Testing Agency Qualifications: A testing agency qualified in accordance with ASTM C1077 and ASTM E329 for testing indicated and employing an ACI-certified Concrete Quality Control Technical Manager.
1. Personnel performing laboratory tests shall be an ACI-certified Concrete Strength Testing Technician and Concrete Laboratory Testing Technician, Grade I. Testing agency laboratory supervisor shall be an ACI-certified Concrete Laboratory Testing Technician, Grade II.

D. Field Quality Control Testing Agency Qualifications: An independent agency qualified in accordance with ASTM C1077 and ASTM E329 for testing indicated.
1. Personnel conducting field tests shall be qualified as an ACI Concrete Field Testing Technician, Grade 1, in accordance with ACI CPP 610.1 or an equivalent certification program.

1.09 PRECONSTRUCTION TESTING

A. Preconstruction Testing Service: Engage a qualified testing agency to perform preconstruction testing on each concrete mixture.
   1. Include the following information in each test report:
      a. Admixture dosage rates.
      b. Slump.
      c. Air content.
      d. Seven-day compressive strength.
      e. 28-day compressive strength.
      f. 56-day compressive strength (where using Blended Hydraulic Cement).

1.10 DELIVERY, STORAGE, AND HANDLING

A. Comply with ASTM C94/C94M and ACI 350.5.

1.11 FIELD CONDITIONS

A. Cold-Weather Placement: Comply with ACI 350.5 and ACI 306.1 and as follows.
   1. Protect concrete work from physical damage or reduced strength that could be caused by frost, freezing actions, or low temperatures.
   2. When average high and low temperature is expected to fall below 40 deg F for three successive days, maintain delivered concrete mixture temperature within the temperature range required by ACI 350.5.
   3. Do not use frozen materials or materials containing ice or snow.
   4. Do not place concrete in contact with surfaces less than 35 deg F, other than reinforcing steel.
   5. Do not use calcium chloride, salt, or other materials containing antifreeze agents or chemical accelerators unless otherwise specified and approved in mixture designs.
   6. Maintain protection against freezing throughout the curing period.

B. Hot-Weather Placement: Comply with ACI 350.5 and ACI 305.1, and as follows:
   1. Maintain concrete temperature at time of discharge to not exceed 95 deg F.
   2. Fog-spray forms, steel reinforcement, and subgrade just before placing concrete. Keep subgrade uniformly moist without standing water, soft spots, or dry areas.

PART 2 - PRODUCTS

2.01 CONCRETE, GENERAL

A. ACI Publications: Comply with ACI 350.5 unless modified by requirements in the Contract Documents.

2.02 CONCRETE MATERIALS

A. Source Limitations:

1. Obtain all concrete mixtures from a single ready-mixed concrete manufacturer for entire Project.
2. Obtain each type or class of cementitious material of the same brand from the same manufacturer's plant.
3. Obtain aggregate from single source.
4. Obtain each type of admixture from single source from single manufacturer.

B. Cementitious Materials:

Cementitious material for the entire project for ready-mixed produced concrete shall be comprised of the type indicated in Item 1 or 4 indicated below. Using both types in project is not permitted without approval by the Engineer. Where "Portland Cement" is indicated in mixture classes, cement type shall be as indicated in Item 1 or 4 below.

1. Portland Cement: ASTM C150/C150M, Type II, gray.
2. Fly Ash: ASTM C618, Class F.
3. Slag Cement: ASTM C989/C989M, Grade 100 or 120.
4. Blended Hydraulic Cement: ASTM C595/C595M, Type IL(≤15), Portland-limestone cement. Fineness limits shall meet medium particle sizes D_{50} < 10 mm or 90th percentile particle sizes D_{90} <30 mm.
5. Silica Fume: ASTM C1240 amorphous silica.

C. Normal-Weight Aggregates: ASTM C33/C33M, Class 3S coarse aggregate or better, graded. Provide aggregates from a single source.

1. Alkali-Silica Reaction: Comply with one of the following:
   a. Expansion Result of Aggregate: Not more than 0.04 percent at one-year when tested in accordance with ASTM C1293.
   b. Expansion Results of Aggregate and Cementitious Materials in Combination: Not more than 0.10 percent at an age of 16 days when tested in accordance with ASTM C1567.
   c. Alkali Content in Concrete: Not more than 4 lb./cu. yd. for moderately reactive aggregate or 3 lb./cu. yd. for highly reactive aggregate, when tested in accordance with ASTM C1293 and categorized in accordance with ASTM C1778, based on alkali content being calculated in accordance with ACI 350.5.
2. Maximum Coarse-Aggregate Size: 1 inch nominal.
3. Fine Aggregate: Free of materials with deleterious reactivity to alkali in cement.

D. Air-Entraining Admixture: ASTM C260/C260M.

E. Chemical Admixtures: Certified by manufacturer to be compatible with other admixtures that do not contribute water-soluble chloride ions exceeding those permitted in hardened concrete. Do not use calcium chloride or admixtures containing calcium chloride.

1. Water-Reducing Admixture: ASTM C494/C494M, Type A.
2. Retarding Admixture: ASTM C494/C494M, Type B.
3. Water-Reducing and -Retarding Admixture: ASTM C494/C494M, Type D.
4. High-Range, Water-Reducing Admixture: ASTM C494/C494M, Type F.

5. High-Range, Water-Reducing and -Retarding Admixture: ASTM C494/C494M, Type G.
6. Plasticizing and Retarding Admixture: ASTM C1017/C1017M, Type II.

F. Water and Water Used to Make Ice: ASTM C94/C94M, potable.

2.03 CURING MATERIALS

A. Evaporation Retarder: Waterborne, monomolecular film forming, manufactured for application to fresh concrete.
1. Manufacturers: Subject to compliance with requirements, available manufacturers offering products that may be incorporated into the Work include, but are not limited to, the following:
a. BASF Corporation.
b. Dayton Superior.
c. Euclid Chemical Company (The); an RPM company.
d. Sika Corporation.
e. W.R. Meadows, Inc.

B. Absorptive Cover: AASHTO M 182, Class 2, burlap cloth made from jute or kenaf, weighing approximately 9 oz./sq. yd. when dry.

C. Moisture-Retaining Cover: ASTM C171, polyethylene film burlap-polyethylene sheet.
1. Color:
a. Ambient Temperature Below 50 deg F: Black.
b. Ambient Temperature between 50 deg F and 85 deg F: Any color.
c. Ambient Temperature Above 85 deg F: White.

D. Water: Potable or complying with ASTM C1602/C1602M.

E. Clear, Waterborne, Membrane-Forming, Curing and Sealing Compound: ASTM C1315, Type 1, Class A.
1. Products: Subject to compliance with requirements, available products that may be incorporated into the Work include, but are not limited to, the following:
a. BASF Corporation; MasterKure CC 250 XS
b. Dayton Superior; Cure & Seal 25% J22UV
c. Euclid Chemical Company (The); an RPM company; Luster Seal 300
d. Laticrete International, Inc.; L&M Lumiseal Plus
e. W.R. Meadows, Inc; CS-309-30.
f. Lambert Corporation; UV Super Seal
g. Approved equal.

2.04 RELATED MATERIALS

A. Expansion- and Isolation-Joint-Filler Strips: Filler material having a maximum compressive strength of 25 psi at 50% deformation per ASTM D1752:
1. W.R. Meadows Ceramar Flexible Foam Expansion Joint.
2. Or Approved Equal.

B. Contraction Joint Filler Strips: Bituminous joint filler complying with ASTM D1751.

C. Wall Vertical Joint Sealant: Elastomeric joint sealant per ASTM C920.

D. Bonding Agent: ASTM C1059/C1059M, Type II, nonredispersible, acrylic emulsion or styrene butadiene.

E. Epoxy Bonding Adhesive: ASTM C881, two-component epoxy resin, capable of humid curing and bonding to damp surfaces, of class suitable for application temperature and of grade and class to suit requirements, and as follows:
   1. Types IV and V, load bearing, for bonding hardened or freshly mixed concrete to hardened concrete.

F. Bond Breaker: Bond breaker shall be SUPER BOND BREAKER WATER BASE as manufactured by Burke Company, San Mateo, California; SELECT EMULSION CURE 309, as distributed by Select Products Co., Upland, CA (clear or white pigmented) or equivalent. Fugitive dye may be used in bondbreakers if recommended by the manufacturer.

2.05 REPAIR MATERIALS

A. Slab Repair Overlayment: Cement-based, polymer-modified, self-leveling product that can be applied in thicknesses from 1/4 inch and that can be filled in over a scarified surface to match adjacent floor elevations.
   1. Cement Binder: ASTM C150/C150M portland cement or hydraulic or blended hydraulic cement, as defined in ASTM C219.
   2. Primer: Product of topping manufacturer recommended for substrate, conditions, and application.
   3. Aggregate: Well-graded, washed gravel,1/8"to 1/4"inch or coarse sand as recommended by topping manufacturer.
   4. Compressive Strength: Not less than 5000 psi at 28 days when tested in accordance with ASTM C109/C109M.

B. Defective Concrete: Repair or replacement of defective concrete will be determined by Engineer.
   1. Product:
      a. SikaTop-111 Plus, by Sika USA,
      b. Or approved equal.

C. Tie Hole Patching and Defective Concrete of Vertical and Overhead Surface: Patch tie holes in fluid retaining structures.
   1. Product:
      a. Patch’n Plug, by ZYPEX,
      b. SikaTop-123 Plus, by Sika USA,
      c. Or approved equal.

2.06 CONCRETE MIXTURES, GENERAL

A. Prepare design mixtures for each type and strength of concrete, proportioned on the basis of laboratory trial mixture or field test data, or both, in accordance with ACI 350.5.
   1. Use a qualified testing agency for preparing and reporting proposed mixture designs, based on laboratory trial mixtures.

B. Cementitious Materials: Limit percentage, by weight, of cementitious materials other than portland cement in concrete as follows:
   1. Fly Ash or Other Pozzolans: 25 percent by mass.
   2. Slag Cement: 50 percent by mass.
   3. Silica Fume: 10 percent by mass.
   4. Total of Fly Ash or Other Pozzolans, Slag Cement, and Silica Fume: 50 percent by mass, with fly ash or pozzolans not exceeding 25 percent by mass and silica fume not exceeding 10 percent by mass.
   5. Total of Fly Ash or Other Pozzolans and Silica Fume: 35 percent by mass with fly ash or pozzolans not exceeding 25 percent by mass and silica fume not exceeding 10 percent by mass.

C. Admixtures: Use admixtures in accordance with manufacturer's written instructions.
   1. Use water-reducing, high-range water-reducing, or plasticizing admixture in concrete, as required, for placement and workability.
   2. Use water-reducing and -retarding admixture when required by high temperatures, low humidity, or other adverse placement conditions.
   3. Use water-reducing admixture in pumped concrete and concrete with a w/cm below 0.50.

2.07 CONCRETE MIXTURES

A. Class A: Normal-weight concrete used for wall footings.
   1. Exposure Class: ACI 350 EF1, ESO, ECO, ECA0, EE0.
   2. Minimum Compressive Strength: 4,500 at 28 days.
   3. Maximum w/cm: 0.45.
   4. Slump Limit: 7 inches plus or minus 1 inch for concrete with verified slump of 3 inches, plus or minus 1 inch before adding high-range water-reducing admixture or plasticizing admixture at Project site.
   5. Air Content:
      a. Exposure Classes EF1: 5 percent, plus or minus 1.5 percent at point of delivery for concrete containing 3/4-inch nominal maximum aggregate size, 4.5 percent, plus or minus 1.5 percent at point of delivery for concrete containing 1-inch nominal maximum aggregate size.
   6. Limit water-soluble, chloride-ion content in hardened concrete to 0.30 percent by weight of cement.

B. Class B: Normal-weight concrete used for wall structures.
   1. Exposure Class: ACI 350 EF2, ES1, EC2, ECA1, EE0.

2. Minimum Compressive Strength: 4,500 psi at 28 days.
3. Maximum w/cm: 0.42.
4. Provide Portland Cement - combined with a minimum of 20 percent, by weight, of cementitious material with either of the following:
    1) Fly Ash supplemented with Silica Fume, or
    2) Ground-Granulated Blast-Furnace Slag supplemented with Silica Fume.
5. Slump Limit: 7 inches, plus or minus 1 inch for concrete with verified slump of 3 inches, plus or minus 1 inch, before adding high-range water-reducing admixture or plasticizing admixture at Project site.
6. Air Content:
    a. Exposure Classes EF2: 6 percent, plus or minus 1.5 percent at point of delivery for concrete containing 3/4-inch to 1-inch nominal maximum aggregate size, 6 percent, plus.

7. Limit water-soluble, chloride-ion content in hardened concrete to 0.10 percent by weight of cement.

C. Class C: Normal-weight concrete used for slabs-on-grade (Biofilter Bays 1 & 2, Biosolids Push Bin, Pre-Compost Mixing Bin).
1. Exposure Class: ACI 350 EF2, ES1, EC2, ECA1, EE0.
2. Minimum Compressive Strength: 4,500 psi at 28 days.
3. Maximum w/cm: 0.42.
4. Minimum Cementitious Materials Content: 560 lb/cu. yd.
    a. Provide Portland Cement - combined with a minimum of 20 percent, by weight, of cementitious material with either of the following:
        1) Fly Ash supplemented with Silica Fume, or
        2) Ground-Granulated Blast-Furnace Slag supplemented with Silica Fume.
5. Slump Limit: 7 inches, plus or minus 1 inch for concrete with verified slump of 3 inches, plus or minus 1 inch, before adding high-range water-reducing admixture or plasticizing admixture at Project site.
6. Air Content:
    a. Exposure Classes EF2: 6 percent, plus or minus 1.5 percent at point of delivery for concrete containing 3/4-inch to 1-inch nominal maximum aggregate size, 6 percent, plus.
7. Limit water-soluble, chloride-ion content in hardened concrete to 0.10 percent by weight of cement.

D. Class D: Type K Shrinkage-Compensating concrete used for slabs-on-grade (Compost Bay and Working Apron).
1. See Project Specifications Division 03 31 19 “Shrinkage-Compensating Concrete”.

2.08 CONCRETE MIXING

A. Ready-Mixed Concrete: Measure, batch, mix, and deliver concrete in accordance with ASTM C94/C94M, and furnish batch ticket information.

1. During hot weather, or under conditions contributing to rapid setting of concrete, a shorter mixing time than specified in ASTM C94/C94M may be required. When air temperature is between 85 deg. F and 90 deg. F, reduce mixing and delivery time from 90 minutes to 75 minutes, and when air temperature is above 90 deg. F, reduce mixing and delivery time to 60 minutes.
2. During cold weather, concrete shall not be mixed while the temperature is below 40 degrees without the permission of the Construction Manager. If permission is granted for mixing under such conditions, aggregates or water, or both, shall be heated and the concrete shall be placed at a temperature between 50 deg. F and 80 deg. F.
3. Retempering of concrete by adding water or any other material is not permitted.

PART 3 - EXECUTION

3.01 EXAMINATION

A. Verification of Conditions:

1. Before placing concrete, verify that installation of concrete forms, accessories, and reinforcement, and embedded items is complete and that required inspections have been performed.
2. Do not proceed until unsatisfactory conditions have been corrected.

B. Verify requirements for concrete cover over reinforcement.

C. Verify that anchors, seats, plates, reinforcement, and other items to be cast into concrete are accurately placed, positioned securely, and will not interfere with placing concrete.

3.02 PREPARATION

A. Provide reasonable auxiliary services to accommodate field testing and inspections, acceptable to testing agency, including the following:
1. Daily access to the Work.
2. Incidental labor and facilities necessary to facilitate tests and inspections.
3. Secure space for storage, initial curing, and field curing of test samples, including source of water and continuous electrical power at Project site during site curing period for test samples.
4. Security and protection for test samples and for testing and inspection equipment at Project site.

B. Previously Placed Concrete:
1. Prepare previously placed concrete by cleaning with steel brush and applying bonding agent.
2. Remove laitance, coatings, and unsound materials.

C. Remove debris and ice from formwork, reinforcement, and concrete substrates.

D. Remove water from areas receiving concrete before concrete is placed.

3.03 INSTALLATION OF EMBEDDED ITEMS

A. Place and secure anchorage devices and other embedded items required for adjoining Work that is attached to or supported by cast-in-place concrete.
   1. Use setting drawings, templates, diagrams, instructions, and directions furnished with items to be embedded.
   2. Install anchor rods, accurately located, to elevations required and complying with tolerances in Section 7.5 of ANSI/AISC 303.

3.04 JOINTS

A. Construct joints true to line, with faces perpendicular to surface plane of concrete.

B. Construction Joints: Coordinate with concrete placement sequence.
   1. Install so strength and appearance of concrete are not impaired, at locations indicated on Drawings.
   2. Place joints perpendicular to main reinforcement.
      a. Continue reinforcement across construction joints unless otherwise indicated.
   3. Form keyed joints as indicated. Embed keys at least 1-1/2 inches into concrete.
   4. Space vertical joints in walls as indicated on Drawings.
   5. Use a bonding agent at locations where fresh concrete is placed against hardened or partially hardened concrete surfaces.

C. Control Joints in Slabs-on-Ground: Form weakened-plane control joints, sectioning concrete into areas as indicated. Construct control joints for a depth equal to at least one-fourth of concrete thickness as follows:
   1. Sawed Joints: Form control joints with power saws equipped with shatterproof abrasive or diamond-rimmed blades. Cut 1/8-inch- wide joints into concrete when cutting action does not tear, abrade, or otherwise damage surface and before concrete develops random cracks.

D. Isolation Joints in Slabs-on-Ground: After removing formwork, install joint-filler strips at slab junctions with vertical surfaces, such as foundation walls, and other locations, as indicated.
   1. Extend joint-filler strips full width and depth of joint, terminating flush with finished concrete surface unless otherwise indicated on Drawings.
   2. Install joint-filler strips in lengths as long as practicable. Where more than one length is required, lace or clip sections together.

E. Doweled Joints:
   1. Install dowel bars and support assemblies at joints where indicated on Drawings.
   2. Lubricate or asphalt coat one-half of dowel bar length to prevent concrete bonding to one side of joint.

3.05 CONCRETE PLACEMENT

A. Before placing concrete, verify that installation of formwork, reinforcement, and embedded items is complete and that required inspections are completed.
   1. Immediately prior to concrete placement, inspect vapor retarder for damage and deficient installation, and repair defective areas.
   2. Provide continuous inspection of vapor retarder during concrete placement and make necessary repairs to damaged areas as Work progresses.

B. Notify Engineer and testing and inspection agencies 24 hours prior to commencement of concrete placement.

C. Do not add water to concrete during delivery, at Project site, or during placement unless approved by Engineer in writing, but not to exceed the amount indicated on the concrete delivery ticket.
   1. Do not add water to concrete after adding high-range water-reducing admixtures to mixture.

D. Deposit concrete continuously in one layer or in horizontal layers of such thickness that no new concrete is placed on concrete that has hardened enough to cause seams or planes of weakness.
   1. If a section cannot be placed continuously, provide construction joints as indicated.
   2. Deposit concrete to avoid segregation.
   3. Deposit concrete in horizontal layers of depth not to exceed formwork design pressures and in a manner to avoid inclined construction joints.
   4. Consolidate placed concrete with mechanical vibrating equipment in accordance with ACI 350.5.
      a. Do not use vibrators to transport concrete inside forms.
      b. Insert and withdraw vibrators vertically at uniformly spaced locations to rapidly penetrate placed layer and at least 6 inches into preceding layer.
      c. Do not insert vibrators into lower layers of concrete that have begun to lose plasticity.
      d. At each insertion, limit duration of vibration to time necessary to consolidate concrete, and complete embedment of reinforcement and other embedded items without causing mixture constituents to segregate.

E. Deposit and consolidate concrete for floors and slabs in a continuous operation, within limits of construction joints, until placement of a panel or section is complete.
   1. Consolidate concrete during placement operations, so concrete is thoroughly worked around reinforcement and other embedded items and into corners.
   2. Maintain reinforcement in position on chairs during concrete placement.
   3. Screed slab surfaces with a straightedge and strike off to correct elevations.
   4. Level concrete, cut high areas, and fill low areas.
   5. Slope surfaces uniformly to drains where required.
   6. Begin initial floating using bull floats or darbies to form a uniform and open-textured surface plane, before excess bleedwater appears on the surface.

7. Do not further disturb slab surfaces before starting finishing operations.

3.06 FINISHING FORMED SURFACES

A. As-Cast Surface Finishes:
   1. ACI 350.5 Surface Finish ESF-1.0: As-cast concrete texture imparted by form-facing material.

      a. Patch voids larger than 1-1/2 inches wide or 1/2 inch deep.
      b. Remove projections larger than 1 inch.
      c. Tie holes do not require patching.
      d. Surface Tolerance: ACI 117 Class D.
      e. Apply to concrete surfaces of footings not exposed to view.
   2. ACI 350.5 Surface Finish ESF-2.0: As-cast concrete texture imparted by form-facing material, arranged in an orderly and symmetrical manner with a minimum of seams.
      a. Patch voids larger than 3/4 inch wide or 1/2 inch deep.
      b. Remove projections larger than 1/4 inch.
      c. Patch tie holes.
      d. Surface Tolerance: ACI 117 Class B.
      e. Locations: Apply to concrete surfaces of retaining wall structures.

B. Related Unformed Surfaces:
   1. At tops of walls, horizontal offsets, and similar unformed surfaces adjacent to formed surfaces, strike off smooth and finish with a texture matching adjacent formed surfaces.
   2. Continue final surface treatment of formed surfaces uniformly across adjacent unformed surfaces unless otherwise indicated.

3.07 FINISHING SLABS

A. Comply with ACI 302.1R recommendations for screeding, restraightening, and finishing operations for concrete surfaces. Do not wet concrete surfaces.

B. Float Finish:
   1. When bleedwater sheen has disappeared and concrete surface has stiffened sufficiently to permit operation of specific float apparatus, consolidate concrete surface with power-driven floats or by hand floating if area is small or inaccessible to power-driven floats.
   2. Repeat float passes and restraightening until surface is left with a uniform, smooth, granular texture and complies with ACI 117 tolerances for conventional concrete.
   3. Apply float finish to surfaces to receive trowel finish.

C. Trowel Finish:
   1. After applying float finish, apply first troweling and consolidate concrete by hand or power-driven trowel.

2. Continue troweling passes and restraighten until surface is free of trowel marks and uniform in texture and appearance.
3. Grind smooth any surface defects that would telegraph through applied coatings or floor coverings.
4. Do not add water to concrete surface.
5. Do not apply hard-troweled finish to concrete, which has a total air content greater than 3 percent.
6. Apply a trowel finish to surfaces of slabs.

D. Broom Finish: Apply a broom finish to exterior concrete platforms, steps, ramps, and locations indicated on Drawings.
1. Immediately after float finishing, slightly roughen trafficked surface by brooming with fiber-bristle broom perpendicular to main traffic route.
2. Coordinate required final finish with Engineer before application.

3.08 INSTALLATION OF MISCELLANEOUS CONCRETE ITEMS

A. Filling In:
1. Fill in holes and openings left in concrete structures after Work of other trades is in place unless otherwise indicated.
2. Mix, place, and cure concrete, as specified, to blend with in-place construction.
3. Provide other miscellaneous concrete filling indicated or required to complete the Work.

B. Curbs: Provide monolithic finish to interior curbs by stripping forms while concrete is still green and by steel-troweling surfaces to a hard, dense finish with corners, intersections, and terminations slightly rounded.

C. Equipment Bases and Foundations:
1. Coordinate sizes and locations of concrete bases with actual equipment provided.
2. Construct concrete bases 6-inches high unless otherwise indicated on Drawings, and extend base not less than 6-inches in each direction beyond the maximum dimensions of supported equipment unless otherwise indicated on Drawings, or unless required for seismic anchor support.
3. Minimum Compressive Strength: 4000 at 28 days.
4. Air Content:
   a. Exterior concrete
      1) Exposure Classes EF3: 6 percent, plus or minus 1.5 percent at point of delivery for concrete containing 3/4-inch to 1-inch nominal maximum aggregate size, 6 percent, plus.
5. Install dowel rods to connect concrete base to concrete floor. Unless otherwise indicated, install dowel rods on 18-inch centers around the full perimeter of concrete base.
6. For supported equipment, install epoxy-coated anchor bolts that extend through concrete base and anchor into structural concrete substrate.
7. Prior to pouring concrete, place and secure anchorage devices.

a. Use setting drawings, templates, diagrams, instructions, and directions furnished with items to be embedded.
b. Cast anchor-bolt insert into bases.
c. Install anchor bolts to elevations required for proper attachment to supported equipment.

3.09 CONCRETE CURING

A. Protect freshly placed concrete from premature drying and excessive cold or hot temperatures.
1. Comply with ACI 350.5 and ACI 306.1 for cold weather protection during curing.
2. Comply with ACI 350.5 and ACI 305.1 for hot-weather protection during curing.
3. Maintain moisture loss no more than 0.2 lb/sq. ft. x h, calculated in accordance with ACI 305.1,) before and during finishing operations.

B. Curing Formed Surfaces: Comply with ACI 308.1 as follows:
1. Cure formed concrete surfaces, including underside of supported slabs and other similar surfaces.
2. If forms remain during curing period, moist cure after loosening forms.
a. For walls, loosen forms and begin moist cure 18hrs after placement and a minimum 1,400psi compressive strength has been attained, for a duration of 7 days.
3. If removing forms before end of curing period, continue curing for remainder of 7-day curing period, using methods listed under article “a-c” below for structures (walls and slabs) in contact with compost materials; and structures not in contact with compost materials shall be cured by method “a, b, c, or d”.
a. Continuous Sprinkling: Maintain concrete surface continuously wet.
b. Absorptive Cover: Pre-dampen absorptive material before application; apply additional water to absorptive material to maintain concrete surface continuously wet.
c. Water-Retention Sheeting Materials: Cover exposed concrete surfaces with sheeting material, taping, or lapping seams.
d. Membrane-Forming Curing Compound: Apply uniformly in continuous operation by power spray or roller in accordance with manufacturer's written instructions.
1) Recoat areas subject to heavy rainfall within three hours after initial application.
2) Maintain continuity of coating and repair damage during curing period.

C. Curing Unformed Surfaces: Comply with ACI 308.1 as follows:
1. Begin curing immediately after finishing concrete.
2. Slabs and grout shaping:
a. Ponding or Continuous Sprinkling of Water: Maintain concrete surfaces continuously wet for not less than seven days, utilizing one, or a combination of, the following:
a) Water.

b) Continuous water-fog spray.

3. Equipment Bases to Receive Curing and Sealing Compound:
   1) Apply uniformly to floors and slabs indicated in a continuous operation by power spray or roller in accordance with manufacturer's written instructions.
   2) Recoat areas subjected to heavy rainfall within three hours after initial application.
   3) Repeat process 24 hours later, and apply a second coat. Maintain continuity of coating, and repair damage during curing period.

3.10 TOLERANCES

A. Conform to ACI 117.

3.11 JOINT FILLING

A. Prepare, clean, and install joint filler in accordance with manufacturer's written instructions.
   1. Defer joint filling until concrete has aged at least one month.
   2. Do not fill joints until construction traffic has permanently ceased.

B. Remove dirt, debris, saw cuttings, curing compounds, and sealers from joints; leave contact faces of joints clean and dry.

3.12 CONCRETE SURFACE REPAIRS

A. Defective Concrete:
   1. Repair and patch defective areas when approved by Engineer.
   2. Remove and replace concrete that cannot be repaired and patched to Engineer's approval.

B. Patching Mortar:
   1. For non-compost retaining structures, mix dry-pack patching mortar, consisting of 1 part portland cement to 2-1/2 parts fine aggregate passing a No. 16 sieve, using only enough water for handling and placing.
   2. For compost retaining structures: see Section 2.6.

C. Repairing Formed Surfaces: Surface defects include texture irregularities, cracks, spalls, air bubbles, honeycombs, rock pockets, fins and other projections on the surface, and stains and other discolorations that cannot be removed by cleaning.
   1. Immediately after form removal, cut out honeycombs, rock pockets, and voids more than 1/2 inch in any dimension to solid concrete.

      a. Limit cut depth to 3/4 inch.
      b. Make edges of cuts perpendicular to concrete surface.
      c. Clean, dampen with water, and brush-coat holes and voids with bonding agent.
      d. Fill and compact with patching mortar before bonding agent has dried.

e. Fill form-tie voids with patching mortar or cone plugs secured in place with bonding agent.

2. Repair defects on concealed formed surfaces that will affect concrete's durability and structural performance as determined by Engineer.

D. Repairing Unformed Surfaces:

1. Test unformed surfaces, such as floors and slabs, for finish, and verify surface tolerances specified for each surface.
   a. Correct low and high areas.
   b. Test surfaces sloped to drain for trueness of slope and smoothness; use a sloped template.
2. Repair finished surfaces containing surface defects, including spalls, popouts, honeycombs, rock pockets, crazing, and cracks in excess of 0.004 inch wide or that penetrate to reinforcement or completely through unreinforced sections regardless of width, and other objectionable conditions.
3. After concrete has cured at least 14 days, correct high areas by grinding.
4. Correct localized low areas during, or immediately after, completing surface-finishing operations by cutting out low areas and replacing with patching mortar.
   a. Finish repaired areas to blend into adjacent concrete.

5. Correct other low areas scheduled to remain exposed with repair topping.
   a. Cut out low areas to ensure a minimum repair topping depth of 1/4 inch to match adjacent floor elevations.
   b. Prepare, mix, and apply repair topping and primer in accordance with manufacturer's written instructions to produce a smooth, uniform, plane, and level surface.
6. Repair defective areas, except random cracks and single holes 1 inch or less in diameter, by cutting out and replacing with fresh concrete.
   a. Remove defective areas with clean, square cuts, and expose steel reinforcement with at least a 3/4-inch clearance all around.
   b. Dampen concrete surfaces in contact with patching concrete and apply bonding agent.
   c. Mix patching concrete of same materials and mixture as original concrete, except without coarse aggregate.
   d. Place, compact, and finish to blend with adjacent finished concrete.
   e. Cure in same manner as adjacent concrete.
7. Repair random cracks and single holes 1 inch or less in diameter with patching mortar.
   a. Groove top of cracks and cut out holes to sound concrete, and clean off dust, dirt, and loose particles.
   b. Dampen cleaned concrete surfaces and apply bonding agent.
   c. Place patching mortar before bonding agent has dried.
   d. Compact patching mortar and finish to match adjacent concrete.
   e. Keep patched area continuously moist for at least 72 hours.

E. Perform structural repairs of concrete, subject to Engineer's approval, using epoxy adhesive and patching mortar.

F. Repair materials and installation not specified above may be used, subject to Engineer's approval.

3.13 FIELD QUALITY CONTROL

A. Special Inspections: Engage a special inspector to perform field tests and inspections and prepare testing and inspection reports.

B. Testing Agency: Engage a qualified testing and inspecting agency to perform tests and inspections and to submit reports.
   1. Testing agency shall be responsible for providing curing container for composite samples on Site and verifying that field-cured composite samples are cured in accordance with ASTM C31/C31M.
   2. Testing agency shall immediately report to Engineer, Contractor, and concrete manufacturer any failure of Work to comply with Contract Documents.
   3. Testing agency shall report results of tests and inspections, in writing, to Owner, Engineer, Contractor, and concrete manufacturer within 48 hours of inspections and tests.
      a. Test reports shall include reporting requirements of ASTM C31/C31M, ASTM C39/C39M, and ACI 350.5, including the following as applicable to each test and inspection:
         1) Project name.
         2) Name of testing agency.
         3) Names and certification numbers of field and laboratory technicians performing inspections and testing.
         4) Name of concrete manufacturer.
         5) Date and time of inspection, sampling, and field testing.
         6) Date and time of concrete placement.
         7) Location in Work of concrete represented by samples.
         8) Date and time sample was obtained.
         9) Truck and batch ticket numbers.
         10) Design compressive strength at 28 days.
         11) Concrete mixture designation, proportions, and materials.
         12) Field test results.
         13) Information on storage and curing of samples before testing, including curing method and maximum and minimum temperatures during initial curing period.
         14) Type of fracture and compressive break strengths at seven days and 28 days.

C. Batch Tickets: For each load delivered, submit three copies of batch delivery ticket to testing agency, indicating quantity, mix identification, admixtures, design strength, aggregate size, design air content, design slump at time of batching, and amount of water that can be added at Project site.

D. Inspections:
   1. Headed bolts and studs.

2. Verification of use of required design mixture.
3. Concrete placement, including conveying and depositing.
4. Curing procedures and maintenance of curing temperature.
5. Verification of concrete strength before removal of shores and forms from beams and slabs.

E. Concrete Tests: Testing of composite samples of fresh concrete obtained in accordance with ASTM C 172/C 172M shall be performed in accordance with the following requirements:
1. Testing Frequency: Obtain one composite sample for each day's pour of each concrete mixture exceeding 5 cu. yd., but less than 25 cu. yd., plus one set for each additional 100 cu. yd. or fraction thereof.
   a. When frequency of testing provides fewer than five compressive-strength tests for each concrete mixture, testing shall be conducted from at least five randomly selected batches or from each batch if fewer than five are used.
2. Slump: ASTM C143/C143M:
   a. One test at point of placement for each composite sample, but not less than one test for each day's pour of each concrete mixture.
   b. Perform additional tests when concrete consistency appears to change.
3. Air Content: ASTM C231/C231M pressure method, for normal-weight concrete.

   a. One test for each composite sample, but not less than one test for each day's pour of each concrete mixture.
4. Concrete Temperature: ASTM C1064/C1064M:
   a. One test hourly when air temperature is 40 deg F and below or 80 deg F and above, and one test for each composite sample.
5. Compression Test Specimens: ASTM C31/C31M:
   a. Cast and laboratory cure two sets of three 6-inch by 12-inch or 4-inch by 8-inch cylinder specimens for each composite sample.
6. Compressive-Strength Tests: ASTM C39/C39M.
   a. Test one set of two laboratory-cured specimens at seven days and one set of two specimens at 28 days.
   b. A compressive-strength test shall be the average compressive strength from a set of two specimens obtained from same composite sample and tested at age indicated.
7. Strength of each concrete mixture will be satisfactory if every average of any three consecutive compressive-strength tests equals or exceeds specified compressive strength, and no compressive-strength test value falls below specified compressive strength by more than 500 psi if specified compressive strength is 5000 psi, or no compressive strength test value is less than 10 percent of specified compressive strength if specified compressive strength is greater than 5000 psi.
8. Nondestructive Testing: Impact hammer, sonoscope, or other nondestructive device may be permitted by Engineer but will not be used as sole basis for approval or rejection of concrete.
9. Additional Tests:

a. Testing and inspecting agency shall make additional tests of concrete when test results indicate that slump, air entrainment, compressive strengths, or other requirements have not been met, as directed by Engineer.

b. Testing and inspecting agency may conduct tests to determine adequacy of concrete by cored cylinders complying with ASTM C42/C42M or by other methods as directed by Engineer.

1) Acceptance criteria for concrete strength shall be in accordance with ACI 301, section 1.6.6.3.

10. Additional testing and inspecting, at Contractor's expense, will be performed to determine compliance of replaced or additional work with specified requirements.

11. Correct deficiencies in the Work that test reports and inspections indicate do not comply with the Contract Documents.

3.14 PROTECTION

A. Protect concrete surfaces as follows:

1. Protect from petroleum stains.
2. Diaper hydraulic equipment used over concrete surfaces.
3. Prohibit use of pipe-cutting machinery over concrete surfaces.
4. Prohibit placement of steel items on concrete surfaces.
5. Prohibit use of acids or acidic detergents over concrete surfaces.

END OF SECTION 03 30 00

SECTION 03 31 19
SHRINKAGE-COMPENSATING CONCRETE

PART 1 - GENERAL

1.01 RELATED DOCUMENTS

A. Drawings and general provisions of the Contract, including General and Supplementary Conditions and Division 01 Specification Sections, apply to this Section.

1.02 SUMMARY

A. Section Includes:
   1. Supply and installation of cast-in-place shrinkage-compensating cement concrete (SCC), including formwork, concrete materials, mixture design, placement procedures and finishes.

B. Basis of Design:
   1. The specifications within this Section are predicated upon the method of combining Type K Shrinkage-Compensating Cement Additive with Type II Portland Cement to create Type K Cement conforming to ASTM C845, which is used to create Type K Shrinkage-Compensating Concrete (ACI 223). Batching, mix design review, and preconstruction testing are all critical components to creating a suitable mix design for the project. The Type K Shrinkage-Compensating Cement Additive referenced within this Section is Komponent, manufactured by CTS Cement Manufacturing Corp. Alternative Type K additives are allowed to be submitted for review and approval by the Engineer, but they must demonstrate equal or better performance requirements than Komponent Shrinkage-Compensating Cement Additive.

C. Related Requirements:
   1. MPWSS Section 02235 "Crushed Base Course" for drainage fill under slabs-on-ground.
   2. Section 03300 "Cast-in-Place Concrete"
   3. Section 03100 "Concrete Forming and Accessories" for form-facing materials, joint fillers, etc.
   4. Section 03200 "Concrete Reinforcing" for steel reinforcing bars and welded-wire reinforcement.

1.03 REFERENCE STANDARDS

A. American Concrete Institute:
   1. ACI 117 (117M) - Specification for Tolerances for Concrete Construction and Materials.
   2. ACI 211.1 - Standard Practice for Selecting Proportions for Normal, Heavyweight, and Mass Concrete
   3. ACI 223 - Guide for the Use of Shrinkage-Compensating Concrete.
   4. ACI 228.1R - Report on Methods for Estimating In-Place Concrete Strength.

5. ACI 301 - Specifications for Structural Concrete.
6. ACI 302.1R - Guide for Concrete Floor and Slab Construction.
7. ACI 305R - Guide to Hot Weather Concreting.
8. ACI 305.1 - Specification for Hot Weather Concreting.
9. ACI 306.1 - Standard Specification for Cold Weather Concreting.
10. ACI 306R - Guide to Cold Weather Concreting.
11. ACI 308.1 - Specification for Curing Concrete.
12. ACI 318 - Building Code Requirements for Structural Concrete.
13. ACI 350 - Code Requirements for Environmental Engineering Concrete Structures
14. ACI 350.5 - Specifications for Environmental Concrete Structures.

B. ASTM International:
1. ASTM C31/C31M - Standard Practice for Making and Curing Concrete Test Specimens in the Field.
2. ASTM C33/C33M - Standard Specification for Concrete Aggregates.
3. ASTM C39/C39M - Standard Test Method for Compressive Strength of Cylindrical Concrete Specimens.
4. ASTM C42/C42M - Standard Test Method for Obtaining and Testing Drilled Cores and Sawed Beams of Concrete.
5. ASTM C94/C94M - Standard Specification for Ready-Mixed Concrete.
6. ASTM C143/C143M - Standard Test Method for Slump of Hydraulic-Cement Concrete.
7. ASTM C150/C150M - Standard Specification for Portland Cement.
8. ASTM C171 - Standard Specification for Sheet Materials for Curing Concrete.
9. ASTM C172/C172M - Standard Practice for Sampling Freshly Mixed Concrete.
10. ASTM C173/C173M - Standard Test Method for Air Content of Freshly Mixed Concrete by the Volumetric Method.
11. ASTM C231/C231M - Standard Test Method for Air Content of Freshly Mixed Concrete by the Pressure Method.
12. ASTM C260/C260M - Standard Specification for Air-Entraining Admixtures for Concrete.
13. ASTM C309 - Standard Specification for Liquid Membrane-Forming Compounds for Curing Concrete.
14. ASTM C494/C494M - Standard Specification for Chemical Admixtures for Concrete.
15. ASTM C595/C595M - Standard Specification for Blended Hydraulic Cements.
16. ASTM C618 - Standard Specification for Coal Fly Ash and Raw or Calcined Natural Pozzolan for Use in Concrete.
17. ASTM C685/C685M - Standard Specification for Concrete Made by Volumetric Batching and Continuous Mixing.
18. ASTM C779/C779M - Standard Test Method for Abrasion of Horizontal Concrete Surfaces.
19. ASTM C806/C806M - Standard Test Method for Restrained Expansion of Expansive Cement Mortar.
20. ASTM C845/C845M - Standard Specification for Expansive Hydraulic Cement.

21. ASTM C878/C878M - Standard Test Method for Restrained Expansion of Shrinkage-Compensating Concrete.
22. ASTM C989/C989M - Standard Specification for Slag Cement for Use in Concrete and Mortars.
23. ASTM C1017/C1017M - Standard Specification for Chemical Admixtures for Use in Producing Flowing Concrete.
24. ASTM C1059/C1059M - Standard Specification for Latex Agents for Bonding Fresh to Hardened Concrete.
25. ASTM C1064/C1064M - Standard Test Method for Temperature of Freshly Mixed Hydraulic-Cement Concrete.
26. ASTM C1074 - Standard Practice for Estimating Concrete Strength by the Maturity Method.
27. ASTM C1077 - Standard Practice for Agencies Testing Concrete and Concrete Aggregates for Use in Construction and Criteria for Testing Agency Evaluation.
28. ASTM C1107/C1107M - Standard Specification for Packaged Dry, Hydraulic-Cement Grout (Nonshrink).
29. ASTM C1157/C1157M - Standard Performance Specification for Hydraulic Cement.
30. ASTM C1218/C1218M - Standard Test Method for Water-Soluble Chloride in Mortar and Concrete.
31. ASTM C1240 - Standard Specification for Silica Fume Used in Cementitious Mixtures.
32. ASTM C1260 - Standard Test Method for Potential Alkali Reactivity of Aggregates (Mortar-Bar Method).
33. ASTM C1293 - Standard Test Method for Determination of Length Change of Concrete Due to Alkali-Silica Reaction.
34. ASTM C1315 - Standard Specification for Liquid Membrane-Forming Compounds Having Special Properties for Curing and Sealing Concrete.
35. ASTM C1567 - Standard Test Method for Determining the Potential Alkali-Silica Reactivity of Combinations of Cementitious Materials and Aggregate (Accelerated Mortar-Bar Method).
36. ASTM C1602/C1602M - Standard Specification for Mixing Water Used in the Production of Hydraulic Cement Concrete.
37. ASTM C1778 - Standard Guide for Reducing the Risk of Deleterious Alkali-Aggregate Reaction in Concrete.
38. ASTM D1752 - Standard Specification for Preformed Sponge Rubber, Cork and Recycled PVC Expansion Joint Fillers for Concrete Paving and Structural Construction.
39. ASTM D6690 - Standard Specification for Joint and Crack Sealants, Hot Applied, for Concrete and Asphalt Pavements.
40. ASTM E154/E154M - Standard Test Methods for Water Vapor Retarders Used in Contact with Earth Under Concrete Slabs, on Walls, or as Ground Cover.
41. ASTM E329 - Standard Specification for Agencies Engaged in Construction Inspection, Testing, or Special Inspection.

42. ASTM E1643 - Standard Practice for Selection, Design, Installation, and Inspection of Water Vapor Retarders Used in Contact with Earth or Granular Fill Under Concrete Slabs.
43. ASTM E1745 - Standard Specification for Plastic Water Vapor Retarders Used in Contact with Soil or Granular Fill under Concrete Slabs.

C. National Ready Mixed Concrete Association (NRMCA):
1. NRMCA - Certification of Ready Mixed Concrete Production Facilities.

1.04 PREINSTALLATION MEETINGS

A. Preinstallation Conference: Conduct conference at Project site.
1. Require representatives of each entity directly concerned with cast-in-place shrinkage-compensating concrete to attend, including the following:
a. Contractor's superintendent.
b. Independent testing agency responsible for concrete design mixtures.
c. Ready-mix concrete manufacturer.
d. Concrete Subcontractor.
e. Formwork Contractor.
2. Review the following:
a. Special inspection and testing and inspecting agency procedures for field quality control.
b. Construction joints, control joints, isolation joints, expansion joints, and joint-filler strips.
c. Cold and hot weather concreting procedures.
d. Concrete finishes and finishing.
e. Curing procedures.
f. Forms and form-removal limitations.
g. Shoring procedures.
h. Concrete repair procedures.
i. Concrete protection.
j. Initial curing and field curing of field test cylinders (ASTM C31/C31M.)
k. Protection of field cured field test cylinders.

1.05 ACTION SUBMITTALS

A. Product Data: For each of the following.
1. Portland cement.
2. Fly ash.
3. Slag cement.
4. Silica fume.
5. Aggregates.
6. Admixtures:
a. Include limitations of use, including restrictions on cementitious materials, supplementary cementitious materials, air entrainment, aggregates, temperature at time of concrete placement, relative humidity at time of concrete placement, curing conditions, and use of other admixtures.

7. Polyethylene slip sheeting.
8. Curing materials.
9. Joint fillers.
10. Repair materials.
11. Dowels/Tapered Plate Dowels

B. Design Mixtures:
1. Submit preliminary mix designs to the project Engineer and Type K shrinkage-compensating cement additive manufacturer for review. For each concrete mixture, submit alternate design mixtures when characteristics of materials, project conditions, weather, test results, or other circumstances warrant adjustments. Maintain mix designs approved by the project Engineer for the project with Project Contract Documents.

C. Shop Drawings: Placing Drawings that detail fabrication, bending, and placement of steel reinforcement. Include bar sizes, lengths, material, grade, bar schedules, stirrup spacing, bent bar diagrams, bar arrangement, splices and laps, mechanical connections, tie spacing, hoop spacing, and supports for concrete reinforcement.

D. Pour Placement Sequencing Schedule:
1. Indicate proposed sequence of construction for all concrete walls, footings, and slabs-on-grade.
   a. Sequence of placing concrete elements is subject to approval of the Engineer.

E. Concrete Schedule: For each location of each Class of concrete indicated in "Concrete Mixtures" Article, including the following:
1. Concrete Class designation.
2. Location within Project.
3. Exposure Class designation.
4. Formed Surface Finish designation and final finish.
5. Final finish for floors.
6. Curing process.
7. Floor treatment if any.

1.06 INFORMATIONAL SUBMITTALS

A. Qualification Data: For the following:
1. Installer: Include copies of applicable ACI certificates.
2. Ready-mixed concrete manufacturer.
3. Testing agency: Include copies of applicable ACI certificates.

B. Material Certificates: For each of the following, signed by manufacturers:
1. Cementitious materials.
2. Admixtures.
3. Curing compounds.
4. Bonding agents.
5. Adhesives.

6. Polyethylene slip sheeting.
7. Joint-filler strips.
8. Repair materials.

C. Material Test Reports: For the following, from a qualified testing agency:
1. Portland cement.
2. Fly ash.
3. Slag cement.
4. Blended hydraulic cement.
5. Silica fume.
6. Aggregates.
7. Admixtures:

D. Research Reports:
1. For concrete admixtures in accordance with ICC's Acceptance Criteria AC198.

E. Preconstruction Test Reports: For SCC mix design.

F. Field quality-control reports.

G. Minutes of preinstallation conference.

1.07 QUALITY ASSURANCE

A. Installer Qualifications: A qualified installer who employs Project personnel familiar with Type K Shrinkage-Compensating Cement Concrete and qualified as an ACI-certified Flatwork Technician and Finisher and a supervisor who is a certified ACI Flatwork Concrete Finisher/Technician or an ACI Concrete Flatwork Technician.

B. Ready-Mixed Concrete Manufacturer Qualifications: A firm familiar with Type K Shrinkage-Compensating Cement Concrete, experienced in manufacturing ready-mixed concrete products, and that complies with ASTM C94/C94M requirements for production facilities and equipment.
1. Manufacturer certified in accordance with NRMCA's "Certification of Ready Mixed Concrete Production Facilities."

C. Laboratory Testing Agency Qualifications: A testing agency qualified in accordance with ASTM C1077 and ASTM E329 for testing indicated and employing an ACI-certified Concrete Quality Control Technical Manager familiar with Type K Shrinkage-Compensating Cement Concrete.
1. Personnel performing laboratory tests shall be an ACI-certified Concrete Strength Testing Technician and Concrete Laboratory Testing Technician, Grade I. Testing agency laboratory supervisor shall be an ACI-certified Concrete Laboratory Testing Technician, Grade II and shall be familiar with Type K Shrinkage-Compensating Cement Concrete.

D. Field Quality Control Testing Agency Qualifications: An independent agency qualified in accordance with ASTM C1077 and ASTM E329 for testing indicated.

1. Personnel conducting field tests shall be qualified as an ACI Concrete Field Testing Technician, Grade 1, in accordance with ACI CPP 610.1 or an equivalent certification program and shall be familiar with Type K Shrinkage-Compensating Cement Concrete.

1.08 PRECONSTRUCTION TESTING

A. Preconstruction Testing Service: Engage a qualified testing agency to perform preconstruction testing on each concrete mixture.
   1. Include the following information in each test report:
      a. Admixture dosage rates.
      b. Slump.
      c. Air content.
      d. Seven-day compressive strength.
      e. 28-day compressive strength.
      f. 56-day compressive strength (where using Blended Hydraulic Cement).

1.09 DELIVERY, STORAGE, AND HANDLING

A. Comply with ASTM C94/C94M and ACI 350.5.

1.10 FIELD CONDITIONS

A. Cold-Weather Placement: Comply with ACI 350.5 and ACI 306.1 and as follows.
   1. Protect concrete work from physical damage or reduced strength that could be caused by frost, freezing actions, or low temperatures.
   2. When average high and low temperature is expected to fall below 40 deg F for three successive days, maintain delivered concrete mixture temperature within the temperature range required by ACI 350.5.
   3. Do not use frozen materials or materials containing ice or snow.
   4. Do not place concrete in contact with surfaces less than 35 deg F, other than reinforcing steel.
   5. Do not use calcium chloride, salt, or other materials containing antifreeze agents or chemical accelerators unless otherwise specified and approved in mixture designs.
   6. Maintain protection against freezing throughout the curing period.

B. Hot-Weather Placement: Comply with ACI 350.5 and ACI 305.1, and as follows:
   1. Maintain concrete temperature at time of discharge to not exceed 95 deg F.
   2. Fog-spray forms, steel reinforcement, and subgrade just before placing concrete. Keep subgrade uniformly moist without standing water, soft spots, or dry areas.

PART 2 - PRODUCTS

2.01 CONCRETE, GENERAL

A. ACI Publications: Comply with ACI 350.5 unless modified by requirements in the Contract Documents.

2.02 CONCRETE MATERIALS

A. Source Limitations:
   1. Obtain all concrete mixtures from a single ready-mixed concrete manufacturer for entire Project.
   2. Obtain each type or class of cementitious material of the same brand from the same manufacturer's plant.
   3. Obtain aggregate from single source.
   4. Obtain each type of admixture from single source from single manufacturer.

B. Cementitious Materials:
   1. Portland Cement: ASTM C150/C150M, Type II, gray.
   2. Type K Cement:
      a. Shrinkage-compensating cement additive combined with ASTM C150 Type II portland cement at a ratio of approximately 15% shrinkage-compensating cement additive and 85% portland cement at the batch plant to create ASTM C845 Type K cement. The exact percentages are determined during mix design review and testing per ASTM C878.
         1) Shrinkage-compensating cement additive:
            a) Komponent by CTS Cement Manufacturing Corp.
            b) Or Approved Equal.
      b. Material must provide expansion from 0.04% to 0.10% at 7 days when tested in accordance with ASTM C878 (modified) by a qualified laboratory approved by the shrinkage-compensating cement manufacturer.
      c. Concrete trial batches must be performed per shrinkage-compensating cement manufacturer’s recommended mix designs and approved by the Structural Engineer.
   3. Fly Ash: ASTM C618, Class F. Report the chemical analysis of the fly ash in accordance with ASTM C311. Evaluate and classify fly ash in accordance with ASTM D5759.
   4. Slag Cement: ASTM C989/C989M, Grade 100 or 120.
   5. Silica Fume: ASTM C1240 amorphous silica.

C. Normal-Weight Aggregates: ASTM C33/C33M, Class 3S coarse aggregate or better, graded. Provide aggregates from a single source.
   1. Alkali-Silica Reaction: Comply with one of the following:
      a. Expansion Result of Aggregate: Not more than 0.04 percent at one-year when tested in accordance with ASTM C1293.
      b. Expansion Results of Aggregate and Cementitious Materials in Combination: Not more than 0.10 percent at an age of 16 days when tested in accordance with ASTM C1567.
      c. Alkali Content in Concrete: Not more than 4 lb./cu. yd. for moderately reactive aggregate or 3 lb./cu. yd. for highly reactive aggregate, when tested in accordance with ASTM C1293 and categorized in accordance with ASTM C1778, based on alkali content being calculated in accordance with ACI 350.5.
   2. Maximum Coarse-Aggregate Size: 1 inch nominal.

3. Fine Aggregate: Free of materials with deleterious reactivity to alkali in cement.

D. Air-Entraining Admixture: ASTM C260/C260M.

E. Chemical Admixtures: Certified by shrinkage-compensating cement manufacturer to be compatible with other admixtures and suitable for use with Type K Cement. Certified to not contribute water-soluble chloride ions exceeding those permitted in hardened concrete. Do not use calcium chloride or admixtures containing calcium chloride.
   1. Water-Reducing Admixture: ASTM C494/C494M, Type A.
   2. Retarding Admixture: ASTM C494/C494M, Type B.
   3. Water-Reducing and -Retarding Admixture: ASTM C494/C494M, Type D.
   4. High-Range, Water-Reducing Admixture: ASTM C494/C494M, Type F.
   5. High-Range, Water-Reducing and -Retarding Admixture: ASTM C494/C494M, Type G.
   6. Plasticizing and Retarding Admixture: ASTM C1017/C1017M, Type II.
   7. Air entraining admixture must conform to ASTM C260/C260M.

F. Water and Water Used to Make Ice: ASTM C94/C94M, potable.

2.03 CURING MATERIALS

A. Evaporation Retardant: Water-based, VOC-compliant, and designed to form a thin, monomolecular film to reduce rapid moisture loss from the concrete surfaces prior to curing.

B. Absorptive Cover: AASHTO M 182, Class 2, burlap cloth made from jute or kenaf, weighing approximately 9 oz./sq. yd. when dry.

C. Moisture-Retaining Cover: ASTM C171, polyethylene film burlap-polyethylene sheet.
   1. Color:
      a. Ambient Temperature Below 50 deg F: Black.
      b. Ambient Temperature between 50 deg F and 85 deg F: Any color.
      c. Ambient Temperature Above 85 deg F: White.

D. Water: Potable or complying with ASTM C1602/C1602M.

2.04 RELATED MATERIALS

A. Slip Sheet Material:
   1. Minimum two layers of 6 mil (0.155mm) polyethylene sheet (total 12 mils (0.31mm)).

B. Expansion- and Isolation-Joint-Filler Strips: Filler material having a maximum compressive strength of 25 psi at 50% deformation per ASTM D1752:
   1. W.R. Meadows Ceramar Flexible Foam Expansion Joint.
   2. Or Approved Equal.

C. Bonding Agent: ASTM C1059/C1059M, Type II, nonredispersible, acrylic emulsion or styrene butadiene.

D. Epoxy Bonding Adhesive: ASTM C881, two-component epoxy resin, capable of humid curing and bonding to damp surfaces, of class suitable for application temperature and of grade and class to suit requirements, and as follows:
   1. Types IV and V, load bearing, for bonding hardened or freshly mixed concrete to hardened concrete.

E. Bond Breaker: Bond breaker shall be SUPER BOND BREAKER WATER BASE as manufactured by Burke Company, San Mateo, California; SELECT EMULSION CURE 309, as distributed by Select Products Co., Upland, CA (clear or white pigmented) or equivalent. Fugitive dye may be used in bond breakers if recommended by the manufacturer.

2.05 REPAIR MATERIALS

A. Slab Repair Overlayment: Cement-based, polymer-modified, self-leveling product that can be applied in thicknesses from 1/4 inch and that can be filled in over a scarified surface to match adjacent floor elevations.
   1. Cement Binder: ASTM C150/C150M portland cement or hydraulic or blended hydraulic cement, as defined in ASTM C219.
   2. Primer: Product of topping manufacturer recommended for substrate, conditions, and application.
   3. Aggregate: Well-graded, washed gravel,1/8"to 1/4"inch or coarse sand as recommended by topping manufacturer.
   4. Compressive Strength: Not less than 5000 psi at 28 days when tested in accordance with ASTM C109/C109M.

B. Defective Concrete: Repair or replacement of defective concrete will be determined by Engineer.
   1. Product:
      a. SikaTop-111 Plus, by Sika USA,
      b. Or approved equal.

2.06 CONCRETE MIXTURES

A. Performance Requirements:
   1. Exposure Class: ACI 350 EF2, ES1, EC2, ECA1, EE0.
   2. Compressive Strength, Minimum: 4,500 psi at 28 days.
   3. Water/Cement Ratio, Maximum: 0.42
   4. Slump Limit: At point of placement 6 inches +/- 1.5 inches.
   5. Air Content: 6 percent, +/- 1.5 percent at point of delivery.

B. Prepare design mixtures for each type and strength of concrete, proportioned on the basis of laboratory trial mixture or field test data, or both, in accordance with ACI 350.5.

1. Use a qualified testing agency for preparing and reporting proposed mixture designs, based on laboratory trial mixtures.

C. Cementitious Materials: Limit percentage, by weight, of cementitious materials other than portland cement in concrete per the recommendations provided by the Type K shrinkage-compensating cement manufacturer.

D. Admixtures: Use admixtures in accordance with manufacturer's written instructions and approved by the shrinkage-compensating cement manufacturer to be compatible with other admixtures and suitable for use with Type K Cement..
   1. Use water-reducing, high-range water-reducing, or plasticizing admixture in concrete, as required, for placement and workability.
   2. Use water-reducing and -retarding admixture when required by high temperatures, low humidity, or other adverse placement conditions.
   3. Use water-reducing admixture in pumped concrete and concrete with a w/cm below 0.50.

2.07 CONCRETE MIXING

A. Ready-Mixed Concrete: Measure, batch, mix, and deliver concrete in accordance with ASTM C94/C94M, and furnish batch ticket information.
   1. During hot weather, or under conditions contributing to rapid setting of concrete, a shorter mixing time than specified in ASTM C94/C94M may be required. When air temperature is between 85 deg. F and 90 deg. F, reduce mixing and delivery time from 90 minutes to 75 minutes, and when air temperature is above 90 deg. F, reduce mixing and delivery time to 60 minutes.
   2. During cold weather, concrete shall not be mixed while the temperature is below 40 degrees without the permission of the Construction Manager. If permission is granted for mixing under such conditions, aggregates or water, or both, shall be heated and the concrete shall be placed at a temperature between 50 deg. F and 80 deg. F.
   3. Retempering of concrete by adding water or any other material is not permitted.

PART 3 - EXECUTION

3.01 EXAMINATION

A. Verification of Conditions:

   1. Before placing concrete, verify that installation of concrete forms, accessories, and reinforcement, and embedded items is complete and that required inspections have been performed.
   2. Do not proceed until unsatisfactory conditions have been corrected.

B. Verify requirements for concrete cover over reinforcement.

C. Verify that anchors, seats, plates, reinforcement, and other items to be cast into concrete are accurately placed, positioned securely, and will not interfere with placing concrete.

3.02 PREPARATION

A. Provide reasonable auxiliary services to accommodate field testing and inspections, acceptable to testing agency, including the following:
   1. Daily access to the Work.
   2. Incidental labor and facilities necessary to facilitate tests and inspections.
   3. Secure space for storage, initial curing, and field curing of test samples, including source of water and continuous electrical power at Project site during site curing period for test samples.
   4. Security and protection for test samples and for testing and inspection equipment at Project site.

B. Previously Placed Concrete:
   1. Prepare previously placed concrete by cleaning with steel brush and applying bonding agent.
   2. Remove laitance, coatings, and unsound materials.

C. Remove debris and ice from formwork, reinforcement, and concrete substrates.

D. Remove water from areas receiving concrete before concrete is placed.

3.03 INSTALLATION OF EMBEDDED ITEMS

A. Place and secure anchorage devices and other embedded items required for adjoining Work that is attached to or supported by cast-in-place concrete.
   1. Use setting drawings, templates, diagrams, instructions, and directions furnished with items to be embedded.
   2. Install anchor rods, accurately located, to elevations required and complying with tolerances in Section 7.5 of ANSI/AISC 303.

3.04 JOINTS

A. Construct joints true to line, with faces perpendicular to surface plane of concrete.

B. Construction Joints: Coordinate with concrete placement sequence.
   1. Install so strength and appearance of concrete are not impaired, at locations indicated on Drawings.
   2. Place joints perpendicular to main reinforcement.
      a. Continue reinforcement across construction joints unless otherwise indicated.
   3. Use a bonding agent at locations where fresh concrete is placed against hardened or partially hardened concrete surfaces.

C. Isolation/Expansion Joints in Slabs-on-Ground: After removing formwork, install joint-filler strips at slab junctions with vertical surfaces, such as foundation walls, and other locations, as indicated.
   1. Extend joint-filler strips full width and depth of joint, terminating flush with finished concrete surface unless otherwise indicated on Drawings.

2. Install joint-filler strips in lengths as long as practicable. Where more than one length is required, lace or clip sections together.

D. Doweled Joints:
1. Install Diamond Plate Dowels (by PNA) with pocket former to accommodate movement at joints.
2. At Contractor's option, install dowel bars and support assemblies at joints where indicated on Drawings.
   a. Lubricate or asphalt coat one-half of dowel bar length to prevent concrete bonding to one side of joint.

3.05 CONCRETE PLACEMENT

A. Before placing concrete, verify that installation of formwork, reinforcement, embedded items, and slip sheeting is complete and that required inspections are completed.
1. Immediately prior to concrete placement, inspect vapor retarder for damage and deficient installation, and repair defective areas.
2. Provide continuous inspection of vapor retarder during concrete placement and make necessary repairs to damaged areas as Work progresses.

B. Notify Engineer and testing and inspection agencies 24 hours prior to commencement of concrete placement.

C. Do not add water to concrete during delivery, at Project site, or during placement unless approved by Engineer in writing, but not to exceed the amount indicated on the concrete delivery ticket.
1. Do not add water to concrete after adding high-range water-reducing admixtures to mixture.

D. Deposit concrete continuously in one layer or in horizontal layers of such thickness that no new concrete is placed on concrete that has hardened enough to cause seams or planes of weakness.
1. If a section cannot be placed continuously, provide construction joints as indicated.
2. Deposit concrete to avoid segregation.
3. Deposit concrete in horizontal layers of depth not to exceed formwork design pressures and in a manner to avoid inclined construction joints.
4. Consolidate placed concrete with mechanical vibrating equipment in accordance with ACI 350.5.
   a. Do not use vibrators to transport concrete inside forms.
   b. Insert and withdraw vibrators vertically at uniformly spaced locations to rapidly penetrate placed layer and at least 6 inches into preceding layer.
   c. Do not insert vibrators into lower layers of concrete that have begun to lose plasticity.
   d. At each insertion, limit duration of vibration to time necessary to consolidate concrete, and complete embedment of reinforcement and other embedded items without causing mixture constituents to segregate.

E. Deposit and consolidate concrete for floors and slabs in a continuous operation, within limits of construction joints, until placement of a panel or section is complete.
   1. Consolidate concrete during placement operations, so concrete is thoroughly worked around reinforcement and other embedded items and into corners.
   2. Maintain reinforcement in position on chairs during concrete placement.
   3. Screed slab surfaces with a straightedge and strike off to correct elevations.
   4. Level concrete, cut high areas, and fill low areas.
   5. Slope surfaces uniformly to drains where required.
   6. Begin initial floating using bull floats or darbies to form a uniform and open-textured surface plane, before excess bleedwater appears on the surface.
   7. Do not further disturb slab surfaces before starting finishing operations.

3.06 FINISHING FORMED SURFACES

A. As-Cast Surface Finishes:
   1. ACI 350.5 Surface Finish ESF-1.0: As-cast concrete texture imparted by form-facing material.

      a. Patch voids larger than 1-1/2 inches wide or 1/2 inch deep.
      b. Remove projections larger than 1 inch.
      c. Tie holes do not require patching.
      d. Surface Tolerance: ACI 117 Class D.
      e. Apply to concrete surfaces of footings not exposed to view.
   2. ACI 350.5 Surface Finish ESF-2.0: As-cast concrete texture imparted by form-facing material, arranged in an orderly and symmetrical manner with a minimum of seams.
      a. Patch voids larger than 3/4 inch wide or 1/2 inch deep.
      b. Remove projections larger than 1/4 inch.
      c. Patch tie holes.
      d. Surface Tolerance: ACI 117 Class B.
      e. Locations: Apply to concrete surfaces of walls.

B. Related Unformed Surfaces:
   1. At tops of walls, horizontal offsets, and similar unformed surfaces adjacent to formed surfaces, strike off smooth and finish with a texture matching adjacent formed surfaces.
   2. Continue final surface treatment of formed surfaces uniformly across adjacent unformed surfaces unless otherwise indicated.

3.07 FINISHING SLABS

A. Comply with ACI 302.1R recommendations for screeding, restraightening, and finishing operations for concrete surfaces. Do not wet concrete surfaces.

B. Float Finish:
   1. When bleedwater sheen has disappeared and concrete surface has stiffened sufficiently to permit operation of specific float apparatus, consolidate concrete

surface with power-driven floats or by hand floating if area is small or inaccessible to power-driven floats.
2. Repeat float passes and restraightening until surface is left with a uniform, smooth, granular texture and complies with ACI 117 tolerances for conventional concrete.
3. Apply float finish to surfaces to receive trowel finish.

C. Trowel Finish:
1. After applying float finish, apply first troweling and consolidate concrete by hand or power-driven trowel.
2. Continue troweling passes and restraighten until surface is free of trowel marks and uniform in texture and appearance.
3. Grind smooth any surface defects that would telegraph through applied coatings or floor coverings.
4. Do not add water to concrete surface.
5. Do not apply hard-troweled finish to concrete, which has a total air content greater than 3 percent.
6. Apply a trowel finish to surfaces of slabs.

D. Broom Finish: Apply a broom finish to exterior concrete platforms, steps, ramps, and locations indicated on Drawings.
1. Immediately after float finishing, slightly roughen trafficked surface by brooming with fiber-bristle broom perpendicular to main traffic route.
2. Coordinate required final finish with Engineer before application.

3.08 INSTALLATION OF MISCELLANEOUS CONCRETE ITEMS

A. Filling In:
1. Fill in holes and openings left in concrete structures after Work of other trades is in place unless otherwise indicated.
2. Mix, place, and cure concrete, as specified, to blend with in-place construction.
3. Provide other miscellaneous concrete filling indicated or required to complete the Work.

B. Curbs: Provide monolithic finish to interior curbs by stripping forms while concrete is still green and by steel-troweling surfaces to a hard, dense finish with corners, intersections, and terminations slightly rounded.

C. Equipment Bases and Foundations:
1. Coordinate sizes and locations of concrete bases with actual equipment provided.
2. Construct concrete bases 6-inches high unless otherwise indicated on Drawings, and extend base not less than 6-inches in each direction beyond the maximum dimensions of supported equipment unless otherwise indicated on Drawings, or unless required for seismic anchor support.
3. Minimum Compressive Strength: 4000 at 28 days.
4. Air Content:
   a. Exterior concrete

1) Exposure Classes EF3: 6 percent, plus or minus 1.5 percent at point of delivery for concrete containing 3/4-inch to 1-inch nominal maximum aggregate size, 6 percent, plus.

5. Install dowel rods to connect concrete base to concrete floor. Unless otherwise indicated, install dowel rods on 18-inch centers around the full perimeter of concrete base.
6. For supported equipment, install epoxy-coated anchor bolts that extend through concrete base and anchor into structural concrete substrate.
7. Prior to pouring concrete, place and secure anchorage devices.

   a. Use setting drawings, templates, diagrams, instructions, and directions furnished with items to be embedded.
   b. Cast anchor-bolt insert into bases.
   c. Install anchor bolts to elevations required for proper attachment to supported equipment.

3.09 CONCRETE CURING

A. Protect freshly placed concrete from premature drying and excessive cold or hot temperatures.
   1. Comply with ACI 350.5 and ACI 306.1 for cold weather protection during curing.
   2. Comply with ACI 350.5 and ACI 305.1 for hot-weather protection during curing.
   3. Maintain moisture loss no more than 0.2 lb/sq. ft. x h, calculated in accordance with ACI 305.1,) before and during finishing operations.

B. Curing Formed Surfaces: Comply with ACI 308.1 as follows:
   1. Cure formed concrete surfaces, including underside of supported slabs and other similar surfaces.
   2. If forms remain during curing period, moist cure after loosening forms.
      a. For walls, loosen forms and begin moist cure 18hrs after placement and a minimum 1,400psi compressive strength has been attained, for a duration of 7 days.
   3. If removing forms before end of curing period, continue curing for remainder of 7-day curing period, using methods listed under article “a-c” below for structures (walls and slabs) in contact with compost materials; and structures not in contact with compost materials shall be cured by method “a, b, c, or d”.
      a. Continuous Sprinkling: Maintain concrete surface continuously wet.
      b. Absorptive Cover: Pre-dampen absorptive material before application; apply additional water to absorptive material to maintain concrete surface continuously wet.
      c. Water-Retention Sheeting Materials: Cover exposed concrete surfaces with sheeting material, taping, or lapping seams.

C. Curing Unformed Surfaces: Comply with ACI 308.1 as follows:
   1. Begin curing immediately after finishing concrete.
   2. Slabs and grout shaping:

a. Ponding or Continuous Sprinkling of Water: Maintain concrete surfaces continuously wet for not less than seven days, utilizing one, or a combination of, the following:
    a) Water.
    b) Continuous water-fog spray.

3. Equipment Bases to Receive Curing and Sealing Compound:
    1) Apply uniformly to floors and slabs indicated in a continuous operation by power spray or roller in accordance with manufacturer's written instructions.
    2) Recoat areas subjected to heavy rainfall within three hours after initial application.
    3) Repeat process 24 hours later, and apply a second coat. Maintain continuity of coating, and repair damage during curing period.

3.10 TOLERANCES

A. Conform to ACI 117.

3.11 JOINT FILLING

A. Prepare, clean, and install joint filler in accordance with manufacturer's written instructions.
    1. Defer joint filling until concrete has aged at least one month.
    2. Do not fill joints until construction traffic has permanently ceased.

B. Remove dirt, debris, saw cuttings, curing compounds, and sealers from joints; leave contact faces of joints clean and dry.

3.12 CONCRETE SURFACE REPAIRS

A. Defective Concrete:
    1. Repair and patch defective areas when approved by Engineer.
    2. Remove and replace concrete that cannot be repaired and patched to Engineer's approval.

B. Patching Mortar:
    1. For non-compost retaining structures, mix dry-pack patching mortar, consisting of 1 part portland cement to 2-1/2 parts fine aggregate passing a No. 16 sieve, using only enough water for handling and placing.
    2. For compost retaining structures: see Section 2.6.

C. Repairing Formed Surfaces: Surface defects include texture irregularities, cracks, spalls, air bubbles, honeycombs, rock pockets, fins and other projections on the surface, and stains and other discolorations that cannot be removed by cleaning.
    1. Immediately after form removal, cut out honeycombs, rock pockets, and voids more than 1/2 inch in any dimension to solid concrete.

        a. Limit cut depth to 3/4 inch.

b. Make edges of cuts perpendicular to concrete surface.
c. Clean, dampen with water, and brush-coat holes and voids with bonding agent.
d. Fill and compact with patching mortar before bonding agent has dried.
e. Fill form-tie voids with patching mortar or cone plugs secured in place with bonding agent.

2. Repair defects on concealed formed surfaces that will affect concrete's durability and structural performance as determined by Engineer.

D. Repairing Unformed Surfaces:

1. Test unformed surfaces, such as floors and slabs, for finish, and verify surface tolerances specified for each surface.
   a. Correct low and high areas.
   b. Test surfaces sloped to drain for trueness of slope and smoothness; use a sloped template.
2. Repair finished surfaces containing surface defects, including spalls, popouts, honeycombs, rock pockets, crazing, and cracks in excess of 0.004 inch wide or that penetrate to reinforcement or completely through unreinforced sections regardless of width, and other objectionable conditions.
3. After concrete has cured at least 14 days, correct high areas by grinding.
4. Correct localized low areas during, or immediately after, completing surface-finishing operations by cutting out low areas and replacing with patching mortar.
   a. Finish repaired areas to blend into adjacent concrete.

5. Correct other low areas scheduled to remain exposed with repair topping.
   a. Cut out low areas to ensure a minimum repair topping depth of 1/4 inch to match adjacent floor elevations.
   b. Prepare, mix, and apply repair topping and primer in accordance with manufacturer's written instructions to produce a smooth, uniform, plane, and level surface.
6. Repair defective areas, except random cracks and single holes 1 inch or less in diameter, by cutting out and replacing with fresh concrete.
   a. Remove defective areas with clean, square cuts, and expose steel reinforcement with at least a 3/4-inch clearance all around.
   b. Dampen concrete surfaces in contact with patching concrete and apply bonding agent.
   c. Mix patching concrete of same materials and mixture as original concrete, except without coarse aggregate.
   d. Place, compact, and finish to blend with adjacent finished concrete.
   e. Cure in same manner as adjacent concrete.
7. Repair random cracks and single holes 1 inch or less in diameter with patching mortar.
   a. Groove top of cracks and cut out holes to sound concrete, and clean off dust, dirt, and loose particles.
   b. Dampen cleaned concrete surfaces and apply bonding agent.
   c. Place patching mortar before bonding agent has dried.
   d. Compact patching mortar and finish to match adjacent concrete.

e. Keep patched area continuously moist for at least 72 hours.

E. Perform structural repairs of concrete, subject to Engineer's approval, using epoxy adhesive and patching mortar.

F. Repair materials and installation not specified above may be used, subject to Engineer's approval.

3.13 FIELD QUALITY CONTROL

A. Special Inspections: Engage a special inspector to perform field tests and inspections and prepare testing and inspection reports.

B. Testing Agency: Engage a qualified testing and inspecting agency to perform tests and inspections and to submit reports.
1. Testing agency shall be responsible for providing curing container for composite samples on Site and verifying that field-cured composite samples are cured in accordance with ASTM C31/C31M.
2. Testing agency shall immediately report to Engineer, Contractor, and concrete manufacturer any failure of Work to comply with Contract Documents.
3. Testing agency shall report results of tests and inspections, in writing, to Owner, Engineer, Contractor, and concrete manufacturer within 48 hours of inspections and tests.
a. Test reports shall include reporting requirements of ASTM C31/C31M, ASTM C39/C39M, and ACI 350.5, including the following as applicable to each test and inspection:
1) Project name.
2) Name of testing agency.
3) Names and certification numbers of field and laboratory technicians performing inspections and testing.
4) Name of concrete manufacturer.
5) Date and time of inspection, sampling, and field testing.
6) Date and time of concrete placement.
7) Location in Work of concrete represented by samples.
8) Date and time sample was obtained.
9) Truck and batch ticket numbers.
10) Design compressive strength at 28 days.
11) Concrete mixture designation, proportions, and materials.
12) Field test results.
13) Information on storage and curing of samples before testing, including curing method and maximum and minimum temperatures during initial curing period.
14) Type of fracture and compressive break strengths at seven days and 28 days.

C. Batch Tickets: For each load delivered, submit three copies of batch delivery ticket to testing agency, indicating quantity, mix identification, admixtures, design strength,

aggregate size, design air content, design slump at time of batching, and amount of water that can be added at Project site.

D. Inspections:
   1. Headed bolts and studs.
   2. Verification of use of required design mixture.
   3. Concrete placement, including conveying and depositing.
   4. Curing procedures and maintenance of curing temperature.
   5. Verification of concrete strength before removal of shores and forms from beams and slabs.

E. Concrete Tests: Testing of composite samples of fresh concrete obtained in accordance with ASTM C 172/C 172M shall be performed in accordance with the following requirements:
   1. Testing Frequency: Obtain one composite sample for each day's pour of each concrete mixture exceeding 5 cu. yd., but less than 25 cu. yd., plus one set for each additional 100 cu. yd. or fraction thereof.
      a. When frequency of testing provides fewer than five compressive-strength tests for each concrete mixture, testing shall be conducted from at least five randomly selected batches or from each batch if fewer than five are used.
   2. Slump: ASTM C143/C143M:
      a. One test at point of placement for each composite sample, but not less than one test for each day's pour of each concrete mixture.
      b. Perform additional tests when concrete consistency appears to change.
   3. Air Content: ASTM C231/C231M pressure method, for normal-weight concrete.
      a. One test for each composite sample, but not less than one test for each day's pour of each concrete mixture.
   4. Concrete Temperature: ASTM C1064/C1064M:
      a. One test hourly when air temperature is 40 deg F and below or 80 deg F and above, and one test for each composite sample.
   5. Compression Test Specimens: ASTM C31/C31M:
      a. Cast and laboratory cure two sets of three 6-inch by 12-inch or 4-inch by 8-inch cylinder specimens for each composite sample.
   6. Compressive-Strength Tests: ASTM C39/C39M.
      a. Test one set of two laboratory-cured specimens at seven days and one set of two specimens at 28 days.
      b. A compressive-strength test shall be the average compressive strength from a set of two specimens obtained from same composite sample and tested at age indicated.
   7. Strength of each concrete mixture will be satisfactory if every average of any three consecutive compressive-strength tests equals or exceeds specified compressive strength, and no compressive-strength test value falls below specified compressive strength by more than 500 psi if specified compressive strength is 5000 psi, or no compressive strength test value is less than 10 percent of specified compressive strength if specified compressive strength is greater than 5000 psi.

8. Nondestructive Testing: Impact hammer, sonoscope, or other nondestructive device may be permitted by Engineer but will not be used as sole basis for approval or rejection of concrete.
9. Additional Tests:
    a. Testing and inspecting agency shall make additional tests of concrete when test results indicate that slump, air entrainment, compressive strengths, or other requirements have not been met, as directed by Engineer.
    b. Testing and inspecting agency may conduct tests to determine adequacy of concrete by cored cylinders complying with ASTM C42/C42M or by other methods as directed by Engineer.
        1) Acceptance criteria for concrete strength shall be in accordance with ACI 301, section 1.6.6.3.
10. Additional testing and inspecting, at Contractor's expense, will be performed to determine compliance of replaced or additional work with specified requirements.
11. Correct deficiencies in the Work that test reports and inspections indicate do not comply with the Contract Documents.

3.14 PROTECTION

A. Protect concrete surfaces as follows:
    1. Protect from petroleum stains.
    2. Diaper hydraulic equipment used over concrete surfaces.
    3. Prohibit use of pipe-cutting machinery over concrete surfaces.
    4. Prohibit placement of steel items on concrete surfaces.
    5. Prohibit use of acids or acidic detergents over concrete surfaces.

END OF SECTION 03 31 19

SECTION 03 41 00
PRECAST CONCRETE STRUCTURES

PART 1 - GENERAL

1.01 WORK INCLUDED

A. This section covers the work necessary for the construction of precast concrete manhole sections and covers. Details are as generally shown on the Drawings.

1.02 SUBMITTALS

A. The following submittals are required for the work specified in this section. Submittals shall be made in accordance with Section 01 33 00, SUBMITTAL PROCEDURE.

1. Details of precast manhole sections.

2. Details of precast covers, if used.

3. Manhole frames and covers, if used.

PART 2 - PRODUCTS

2.01 STRUCTURAL BACKFILL

A. Base material shall conform to Structural Backfill as specified in Sections 31 23 21 – FILL & BACKFILL and 32 05 16 – AGGREGATES FOR EXTERIOR IMPROVEMENTS.

2.02 CONCRETE

A. Concrete shall be as specified in Section 03 30 00, CAST-IN-PLACE CONCRETE.

2.03 REINFORCING STEEL

A. Reinforcing steel shall conform to Section 03 20 00, CONCRETE REINFORCING

2.04 PRECAST MANHOLE SECTIONS

A. Precast manhole sections shall be of the size shown on the Drawings, conforming to ASTM C478. Minimum wall thickness shall be 5 inches. Provide eccentric cones or flat top sections for all manholes. Cones shall have same wall thickness and reinforcement as manhole section. Top and bottom of all sections shall be parallel. Flat top sections shall be designed to withstand H-20 loading. Joints shall be preformed plastic gaskets meeting ASTM C990 or confined O-ring with rubber gaskets conforming to ASTM C443.

B. Precast manhole base sections shall be one-piece casts (monolithic) and shall have a minimum base thickness of 6 inches.

1. If the monolithic base section is built using multiple concrete pours, install 4” PVC water stop at all cold joints to ensure watertight joints.

C. Precast manhole covers shall be one piece casts (monolithic) and shall have a minimum thickness of 9 inches.

2.05 MANHOLE EXTENSIONS

A. Concrete grade rings for extensions shall be a maximum of 6 inches high and shall be approved by Engineer before installation. Manhole grade rings shall be reinforced with the same percentage of steel as the manhole sections, and shall be supplied with non-slip lugs to match grooves in the precast manhole top.

B. In general, manhole extensions will be used on all manholes in roads or streets or in other locations where a subsequent change in existing grade may be likely. Extensions will be limited to a maximum height of 12 inches. Finish grade for manhole covers shall conform to finished grade in paved areas or 6 inches above finished grade in unpaved areas unless directed otherwise by the Engineer

2.06 MANHOLE FRAMES AND COVERS

A. Standard manhole frames and covers shall be heavy duty cast iron. Castings shall be tough, close-grained gray iron, sound, smooth, clean, free from blisters, blowholes, shrinkage, cold shuts, and all defects, and shall conform to ASTM A48, Class 30B. Plane or grind bearing surfaces to ensure flat, true surfaces. Covers shall be true and seat within ring at all points. Frames shall have a minimum opening of 24 inches. Standard frames and covers shall be Neenah Foundry or equal.

2.07 MANHOLE STEPS

A. Steps shall be non-corrosive steps, 12-inches in width, consisting of 1/2-inch steel rod encased with polypropylene. Steps shall withstand vertical loads of 400 pounds and pull-out resistance of 1,000 pounds. Steps shall be as manufactured by MA. Industries, Inc., Type PSI-PF, or equal.

2.08 PIPE PENETRATIONS

A. Pipe penetrations shall be sealed with modular seals or boot-type flexible connectors as shown on the Drawings.

B. Modular seals shall be mechanical units consisting of interlocking synthetic rubber links shaped to continuously fill the annular space between the pipe and sleeve. The interconnected rubber links shall be assembled with stainless steel bolts and nuts. Closures shall be sized according to manufacturer's instructions for the size of pipes shown on the Drawings, and shall withstand a hydrostatic head of 40 feet of water. Modular seals shall be Link Seal by Thunderline Corporation, or approved equal.

C. Boot-type flexible connectors shall be PSX Direct Drive, or approved equal.

2.09 EXTERIOR COATING

A. All manholes shall include an external joint wrap. Install external joint wrap on all manhole joints prior to applying external coating. External joint wrap shall be polyolefin backed exterior joint wrap such as Conseal (CS-212) or approved equal.

B. All manholes shall include external damp proofing. External damp proofing shall be a waterborne acrylic based coating such as Conseal CS-55 or approved equal.

PART 3 - EXECUTION

3.01 EXCAVATION AND BACKFILL

A. Conform to applicable portions of Sections 31 23 21- FILL & BACKFILL, and 31 23 33 – TRENCHING & BACKFILL. Backfill around manholes shall be of the highest quality at least equal to the trench backfill immediately adjacent. Do not backfill until all exterior walls have been coated as noted on the Drawings.

B. Prior to placement and compaction of the structural fill, the native subgrade shall be compacted to not less than 95 percent of maximum dry density according to ASTM D698. Suitability of subgrade material shall be approved by the Engineer as specified in Sections 31 23 21- FILL & BACKFILL, and 31 23 33 – TRENCHING & BACKFILL.

3.02 GRANULAR LEVELING COURSE FOR BASE

A. Remove any water, if present, from the excavation. Place a minimum of 8 inches of Granular Leveling Course as shown on the Drawings, and thoroughly leveled as specified in Sections 31 23 21- FILL & BACKFILL, 31 23 33 – TRENCHING & BACKFILL, AND 31 05 31 – SOILS FOR EARTHWORK.

B. If material in bottom of trench is unsuitable for supporting structure, excavate below the structure as directed by Engineer, and backfill to required grade with trench stabilization material, conforming to Sections 31 23 21- FILL & BACKFILL, and 31 23 33 – TRENCHING & BACKFILL.

3.03 INVERT CHANNELS

A. Make invert channels smooth and semi-circular in shape conforming to the inside of the adjacent pipe section. Make changes in flow direction with a smooth curve of as large a radius as the manhole size will permit. Make changes in channel grade and size gradually and evenly. The invert channels may be formed directly in the grout or by laying half-pipe in the grout. Make the floor of the manhole outside the channel smooth and slope toward the channel at one inch per foot (8 cm per meter).

3.04 PLACING PRECAST MANHOLE SECTIONS

A. Carefully inspect precast manhole sections to be joined. Sections with chips or cracks in the tongue shall not be used. Preformed plastic gaskets shall be installed in strict conformance with the manufacturer's recommendations. Only pipe primer furnished by the gasket manufacturer will be approved.

B. Lifting holes placed in precast sections shall be sealed with non-shrink grout, as specified previously.

3.05 FLEXIBLE JOINTS

A. Provide joints in all pipe as shown on the Drawings and not more than 3 feet from precast concrete structure walls. Lay pipes entering precast sections on firmly compacted structural fill to undisturbed earth. Imported structural fill shall be as specified hereinbefore.

3.06 MANHOLE EXTENSIONS

A. Install extensions in conformance with the details shown on the Drawings, and to height as required to achieve finish grade elevation specified hereinbefore. Lay grade rings in grout with sides plumb and tops level. Seal joints with grout as specified for manhole sections. Extensions shall be watertight.

3.07 FRAMES AND COVERS

A. Install manhole frames and covers on top of manholes to positively prevent all infiltration of surface or groundwater into manholes. Frames shall be set in a grout with the grout carried over the flange of the ring as shown in the details on the Drawings. Set frames so tops of covers are flush with paved surfaces or 6 inches above unpaved surfaces, unless otherwise shown or directed.

3.08 LEAK TESTING

A. All water-holding structures (i.e. lift station wet well, lagoon structures, etc.) must be hydraulically tested prior to backfill. Fill the structure with water to the maximum height prior to leak testing, and maintain level for 48 hours for moisture absorption by the concrete. Close valves and plug remaining pipe penetrations into the structure and measure the change in water surface for a 24-hour period. The allowable leakage rate must not exceed 0.1 percent of the water volume in a 24-hour period and must not show any visible leakage or dampness on the exterior walls. If the drop in water surface exceeds the allowable leakage or visible leakage/dampness is observed on the exterior walls, repair the structure and retest until a passing test is obtained.

B. Gravity sewer manholes shall be tested in accordance with ASTM C1244, Standard Test Method for Concrete Sewer Manholes by the Negative Air Pressure (Vacuum) Test. The test shall consist of plugging all penetrations in the manhole and drawing a vacuum of 10 inches of Hg (5 psi). The test apparatus shall be directly applied to the top of the concrete cover following the manufacturer's recommendations. After reaching 10 inches of Hg, the time is recorded for the vacuum pressure to drop to 9 inches of Hg (4.5 psi). The manhole is acceptable if the time required to drop 1 inch of Hg (0.5 psi) is greater than the value shown in the table below based on the structure's diameter and depth. Repair all concrete manholes that do not meet the leakage test, or are unsatisfactory from visual inspection, to conform to the requirements herein.

Minimum Test Times for Various Manhole Diameters (ASTM C1244)

Depth (ft)	Diameter (in)				
	48	60	72	84	96
	Time (sec)				
8	20	26	33	38	45
10	25	33	41	48	56
12	30	39	49	57	67
14	35	46	57	67	78
16	40	52	67	76	89
18	45	59	73	86	100
20	50	65	81	95	111
22	55	72	89	105	122
24	59	78	97	114	133
26	64	85	105	124	144
28	69	91	113	133	155
30	74	98	121	143	166

END OF SECTION 03 41 00

SECTION 03 60 00
GROUT

PART 1 - GENERAL

1.01 WORK INCLUDED

A. This section covers the uses of grout where indicated on the Drawings.

1.02 SUBMITTALS

A. The following submittals for construction shall be made in accordance with the project submittal requirements as described in the Supplementary Conditions.
   1. Manufacturer's information indicating the application, formulation, and installation procedures for each brand and type of grout to be used.

1.03 PRODUCT HANDLING

A. Delivery of Materials. The Contractor shall deliver all materials to the job site in original, new and unopened containers bearing the manufacturer's name and label showing at least the following information:
   1. Name or title of the material.
   2. Federal Specification number, if applicable.
   3. Manufacturer's stock number.
   4. Manufacturer's name.
   5. Contents by volume for major constituents.
   6. Handling instructions.
   7. Application instructions.

B. Storage of Materials. The Contractor shall provide proper storage to prevent moisture contamination of, damage to, and deterioration of grout materials.

C. Protection. The Contractor shall use all means necessary to protect the materials in this section before, during, and after installation to protect the work and materials of all other trades.

PART 2 - MATERIALS

2.01 NON-SHRINKING GROUT

A. Non-shrinking grout shall be Sika Grout 212, or equal.

2.02 EPOXY GROUT

A. Adhesive. Two-component liquid equal to Thermal-Chem "Mortar Resin Product No. 3," Minwax "Por-Rok Epoxy Grout."

B. Aggregate. As recommended by the epoxy grout manufacturer.

2.03 WATER

A. Clean and free from deleterious substances.

PART 3 - EXECUTION

3.01 NON-SHRINKING GROUT

A. General. Non-shrinking grout shall be furnished factory-premixed so only water is added at the job site. Grout shall be mixed in a mechanical mixer. No more water shall be used than is necessary to produce a flowable grout.

B. Preparation. The concrete foundation to receive non-shrinking grout shall be saturated with water for 24 hours prior to grouting.

C. Placement. Grout shall be placed in strict accordance with the directions of the manufacturer so all spaces and cavities are completely filled without voids. Forms shall be provided where components will not confine the grout.

D. Finishing. The grout shall be finished smooth in all locations where the top surface or edge of the grout will be exposed to view after it has reached its initial set. Except where shown to be finished on a slope, the edges of grout shall be cut off flush at the baseplate, bedplate, member, or piece of equipment.

E. Curing. Non-shrink grout shall be protected against rapid loss of moisture by covering with wet rags or polyethylene sheets. After edge finishing is completed, the grout shall be wet-cured for at least 7 days.

3.02 EPOXY GROUT

A. General. Components shall be packed separately at the factory and field mixed. All proportioning and mixing of the components shall be in accordance with the manufacturer's recommendations.

B. Preparation. Where indicated on the Drawings, anchor bolts and reinforcing bars shall be epoxy grouted in holes drilled into hardened concrete. Diameters of holes shall be 1/4-inch larger than the maximum dimension of the bolt head, and 1/2-inch larger than the bar diameter. The embedment depth for epoxy-grouted anchor bolts and reinforcing bars shall not be less than 10-bolt or bar diameters unless indicated otherwise on the Drawings.
   1. Holes shall be prepared for grouting as recommended by the grout manufacturer.

C. Installation. Anchor bolts and reinforcing bars shall be clean, dry, and free of grease or other foreign matter at the time of installation. The bolts and bars shall be set and positioned and the epoxy grout shall be placed and finished in accordance with the recommendations of the grout manufacturer. Particular care shall be taken to insure that all spaces and cavities are filled with epoxy grout, without voids.

3.03 USES OF GROUT

A. Non-shrink grout shall be used beneath all equipment bases and other locations shown on the Drawings or specified herein. Grouting thicknesses and application shall meet the equipment manufacturer's requirements.

B. Epoxy grout shall be used at locations shown on the Drawings or specified herein. Repair of rock pockets or surface defects in concrete work approved for repair by the Engineer shall generally be repaired with epoxy grout unless otherwise directed by the Engineer. Anchor bolts approved by the Engineer for installation in concrete shall be set in epoxy grout unless otherwise directed by the Engineer. This grout shall not be used in contact with potable water.

END OF SECTION 03 60 00

DIVISION 5

METALS

SECTION 05 50 00
METAL FABRICATIONS

PART 1 - GENERAL

1.01 SUMMARY

A. Section Includes:

1. Miscellaneous metal fabrications and supports.

a. Anchor bolts to be cast into concrete or threaded anchor rod to be post-installed using chemical adhesive anchors (epoxy).
b. Steel wearing plates fastened to the face of push walls at Biosolids and Pre-Compost Mixing Bins.
c. Threaded weld studs used for anchoring steel wearing plates.
d. Steel base plates and plate washers.
e. Steel embed plates and angles for casting into concrete.
f. Headed anchor studs welded to embed plates and embed angles.
g. ASCE rail to be embedded in concrete slabs at Biosolids and Pre-Compost Mixing Bins.

2. Shrinkage-resistant grout.

1.02 ACTION SUBMITTALS

A. Product Data: For the following:

1. Fasteners.

a. Furnish ICBO Evaluation reports, product data, and installation instructions for post-installed (adhesive) anchors.

2. Steel embed plates and angles;

3. Shop primers.

4. Shrinkage-resisting grout.

B. Shop Drawings: Show fabrication and installation details. Include plans, elevations, sections, and details of metal fabrications and their connections. Show anchorage and accessory items.

1.03 INFORMATIONAL SUBMITTALS

A. Adhesive Anchors. Furnish the following:

1. Manufacturer's past project experience data on at least three similar projects supplied with proposed system within the last three years, to include client name, address, contact person, phone number, project location, and description of work.

2. Test reports for each batch of adhesive delivered to site. Provide manufacturer's written certification that each batch delivered meets these Specifications, the intended uses on project, and capability to bond to damp or wet concrete surfaces.

3. Manufacturer's written letter of certification identifying contractor employees qualified for installing adhesive anchors, trained through jobsite instruction conducted by manufacturer.

4. Furnish specific written statement from EPA and health agencies that the adhesive product is acceptable for use in potable water structures or conveyances prior to use on this project.

B. All Concrete Anchors - Provide specific instructions or all phases of installation including hole size, preparation, placement, and procedures. Provide also specific instructions for safe handling and installation of all anchors to Contractor staff handling and installing these anchors.

C. Steel Plates – Furnish the following:

1. All dimensions of the embed plates/angles and wearing plate;

2. Length, diameter and configuration of welded studs;

3. Grade of steel for all components;

4. Manufacturer name

D. ASCE Rail – Furnish the following:

1. All dimensions of rail;

2. Diameter and configuration of holes;

3. Grade of steel;

4. Manufacturer name

1.04 QUALITY ASSURANCE

A. Qualifications. Qualify welding operators in accordance with requirements of current AWS Standard Qualification Procedure D1.1, Chapter 5.

1. Qualification Tests. Performed by a recognized testing laboratory.

B. Certification. Certify welders of structural and reinforcing steel for all positions of welding in accordance with such procedure.

1.05 DELIVERY, STORAGE, AND HANDLING

A. Preparation for Shipment.

1. Insofar as practical, factory assemble items specified herein.

2. Package and clearly tag parts and assemblies that are of necessity shipped unassembled, in a manner that will protect materials from damage, and facilitate identification and field assembly.

B. Storage of Adhesive Products.

1. Store components on pallets or shelving in a covered storage area with locking door.

2. Control temperature within 41 degrees F to 77 degrees F and dispose of product if shelf life has expired.

3. If stored at temperatures above manufacturer's recommended maximum, test components prior to use to determine if they still meet specified requirements.

PART 2 - PRODUCTS

2.01 PERFORMANCE REQUIREMENTS

A. Like Items of Materials. End products of one manufacturer in order to achieve standardization for appearance, maintenance, and replacement.

B. Lifting Lugs. Provide on equipment and equipment components weighing over 100 pounds.

2.02 GENERAL

A. Furnish miscellaneous items.

1. Miscellaneous metal work and castings as shown, or as required to secure various parts together and provide a complete installation.

2. Items specified herein are not intended to be all-inclusive. Provide metal work and castings shown, specified, or which can reasonably be inferred as necessary to complete the project.

2.03 METALS

A. Metal Surfaces, General: Provide materials with smooth, flat surfaces unless otherwise indicated. For metal fabrications exposed to view in the completed Work, provide materials without seam marks, roller marks, rolled trade names, or blemishes.

B. Embed Plates, Embed Angles, Baseplates, Plate Washers: ASTM A36/A36M

C. Corrosion-Resisting Structural-Steel Shapes, Plates, and Bars: ASTM A588, Grade 50.

D. Stainless Steel Bars and Shapes: ASTM A276/A276M, Type 316L.

E. Abrasion-Resistant Wearing Plates: ASTM A400/A400M.

F. ASCE Rail: 55Q or alloy steel to be approved by Engineer.

2.04 FASTENERS

A. General: Unless otherwise indicated, provide ASTM A193, Type 316stainless steel fasteners if not permanently embedded in concrete, but located outdoors in areas subject to the weather; chemical handling areas; equipment rooms subject to drainage, leakage, and washdown; and in galleries and trenches.

1. Provide stainless steel fasteners for fastening aluminum and stainless steel.

2. ASTM A307 or A36 with ASTM A153 galvanized if not permanently embedded in concrete, and not used for structural steel or piping, but located indoors where wash down, leakage, and drainage are not likely to occur (e.g., in personnel

buildings excluding laboratories, on motor floors, in electrical equipment rooms, and in control rooms).

3. For Flanges of Piping, Valves, and Other Similar Connections. As specified in other sections, or as shown.

B. Anchor Bolts and Threaded Weld Studs:

1. ASTM F1554, Grade 36

2. Finish: Galvanized

C. Headed Anchor Studs

1. ASTM A108, AISI C-1015 through C-1020, headed-stud type, cold-finished carbon steel; AWS D1.1/D1.1M, Type B.

D. Post-Installed Chemical Adhesive Anchors:

1. Manufacturer:

a. Dewalt Anchors
b. Hilti, Inc.
c. Simpson Strong-Tie
d. Or approved equal.

2.05 MISCELLANEOUS MATERIALS

A. Weld Electrodes: Provide weld electrodes that are compatible with the connected base metal(s).

1. Use E70xx electrode to weld carbon steel base metals.

2. Use low-alloy E80xx-W to weld weathering steel base metals.

3. Use 308L electrode to weld austenitic stainless steel (types 301, 302, 304, 305 stainless steel) base metals.

4. Use 316L electrode to weld type 316 and 316L stainless steel base metals.

B. Shop Primers: Provide primers that comply with Section 09 90 00 "Painting and Coating" and Section 09 90 02 "High Performance Painting and Coating".

C. Galvanizing Repair Paint: High-zinc-dust-content paint complying with SSPC-Paint 20 and compatible with paints specified to be used over it.

D. Stainless Steel Fastener Lubricant (Anti-seizing)

1. Provide for stainless steel nuts and machined bolts, anchor bolts, concrete anchors, and all other threaded fasteners.

2. Lubricant shall contain substantial amounts of molybdenum disulfide, graphite, mica, talc, or copper as manufactured by:

a. Loc Tite Co., Permatex.
b. Or equal.

E. Shrinkage-Resistant Grout: Factory-packaged, nonmetallic, nonstaining, noncorrosive, nongaseous grout complying with ASTM C1107/C1107M. Provide grout specifically recommended by manufacturer for interior and exterior applications.

2.06 FABRICATION, GENERAL

A. Shop Assembly: Preassemble items in the shop to greatest extent possible. Disassemble units only as necessary for shipping and handling limitations. Use connections that maintain structural value of joined pieces. Clearly mark units for reassembly and coordinated installation.

B. Cut, drill, and punch metals cleanly and accurately. Remove burrs and ease edges to a radius of approximately 1/32 inch unless otherwise indicated. Remove sharp or rough areas on exposed surfaces.

C. Form bent-metal corners to smallest radius possible without causing grain separation or otherwise impairing work.

D. Form exposed work with accurate angles and surfaces and straight edges.

E. Weld corners and seams continuously to comply with the following:

1. Use materials and methods that minimize distortion and develop strength and corrosion resistance of base metals.

2. Obtain fusion without undercut or overlap.

3. Remove welding flux immediately.

4. At exposed connections, finish exposed welds and surfaces smooth and blended so no roughness shows after finishing.

F. Form exposed connections with hairline joints, flush and smooth, using concealed fasteners or welds where possible. Where exposed fasteners are required, use Phillips flat-head (countersunk) fasteners unless otherwise indicated. Locate joints where least conspicuous.

G. Fabricate seams and other connections that are exposed to weather in a manner to exclude water. Provide weep holes where water may accumulate.

H. Where units are indicated to be cast into concrete or built into masonry, equip with integrally welded steel strap anchors, not less than 8 inches from ends and corners of units and 24 inches o.c.

2.07 GENERAL FINISH REQUIREMENTS

A. Finish metal fabrications after assembly.

2.08 STEEL AND IRON FINISHES

A. Galvanizing: Hot-dip galvanize items as indicated to comply with ASTM A153/A153M for steel and iron hardware and with ASTM A123/A123M for other steel and iron products.

1. Do not quench or apply post galvanizing treatments that might interfere with paint adhesion.

B. Shop prime iron and steel items not indicated to be galvanized unless they are to be embedded in concrete, sprayed-on fireproofing, or masonry, or unless otherwise indicated.

1. Shop prime with primers specified in Section 09 90 00 "Painting and Coating" primers specified in Section 09 90 02 "High Performance Painting and Coating" unless indicated.

C. Preparation for Shop Priming: Prepare surfaces to comply with SSPC-SP 3, "Power Tool Cleaning."

D. Shop Priming: Apply shop primer to comply with SSPC-PA 1, "Paint Application Specification No. 1: Shop, Field, and Maintenance Painting of Steel," for shop painting.

PART 3 - EXECUTION

3.01 INSTALLATION, GENERAL

A. Cutting, Fitting, and Placement: Perform cutting, drilling, and fitting required for installing metal fabrications. Set metal fabrications accurately in location, alignment, and elevation; with edges and surfaces level, plumb, true, and free of rack; and measured from established lines and levels.

B. Fit exposed connections accurately together to form hairline joints. Weld connections that are not to be left as exposed joints but cannot be shop welded because of shipping size limitations. Do not weld, cut, or abrade surfaces of exterior units that have been hot-dip galvanized after fabrication and are for bolted or screwed field connections.

C. Field Welding: Comply with the following requirements:

1. Use materials and methods that minimize distortion and develop strength and corrosion resistance of base metals.

2. Obtain fusion without undercut or overlap.

3. Remove welding flux immediately.

4. At exposed connections, finish exposed welds and surfaces smooth and blended so no roughness shows after finishing and contour of welded surface matches that of adjacent surface.

D. Fastening to In-Place Construction: Provide anchorage devices and fasteners where metal fabrications are required to be fastened to in-place construction. Provide threaded fasteners for use with concrete and masonry inserts, toggle bolts, through bolts, lag screws, wood screws, and other connectors.

1. Do not begin installation until concrete or masonry receiving anchors have attained design strength.

2. Do not install an anchor closer than six times its diameter to either an edge of concrete or masonry, or to another anchor, unless specifically shown otherwise.

E. Apply specified antiseizing lubricant to threads prior to making up connections.

F. Provide temporary bracing or anchors in formwork for items that are to be built into concrete, masonry, or similar construction.

3.02 REPAIRS

A. Galvanized Surfaces: Clean field welds, bolted connections, and abraded areas and repair galvanizing to comply with ASTM A780/A780M.

END OF SECTION 05 50 00

DIVISION 7

THERMAL & MOISTURE PROTECTION

SECTION 07 11 00
DAMPPROOFING

PART 1 - GENERAL

1.01 WORK INCLUDED

A. This section covers the work necessary to furnish and install, complete, all belowgrade dampproofing.

1.02 RELATED SECTIONS

A. Division 3 – Concrete & Grout

1.03 GENERAL

A. See the GENERAL CONDITIONS and Division 1, GENERAL REQUIREMENTS, which contain information and requirements that apply to the work specified herein and are mandatory for this project.

1.04 SUBMITTALS

A. Submittals shall be made in accordance with Section 01 30 00, SUBMITTALS in Division 1, GENERAL REQUIREMENTS.

B. Submit the following:

1. Manufacturer’s Literature: Submit manufacturer's literature, specifications, and application instructions for dampproofing materials.

2. Certificate: Submit manufacturer's certificate of conformance with these Specifications.

PART 2 - PRODUCTS

2.01 GENERAL

A. The use of a manufacturer's name and catalog number is for the purpose of establishing the standard of quality desired only. Products of other manufacturers will be considered in accordance with the General Conditions.

2.02 DAMPPROOFING

A. Asphalt compound of brush or spray consistency conforming to Federal Specification SS-A-701 or ASTM D449, Type A; A.C. Horn Dehydratine 4; J & P Petroleum Products Tex-Mastic No. 720; W.R. Meadows, Inc. Spray-Mastic; Sonneborn Hydrocide 700B; or equal.

PART 3 - EXECUTION

3.01 ENVIRONMENTAL REQUIREMENTS

A. Do not start work until the following environmental requirements are met.

B. Do not proceed with application of materials when ambient temperature is less than 50

degree F.

C. Do not apply dampproofing in rainy conditions or within 3 days after surfaces become wet from rainfall or other moisture.

D. Do not apply materials when low temperature of 40 degrees F or less is predicted within a period of 24 hours after application.

3.02 INSPECTION

A. Examine surfaces to receive dampproofing to assure conditions are satisfactory for application of materials.

3.03 SURFACE PREPARATION

A. Clean surfaces to remove dust, dirt, oil, wax, efflorescence, and other foreign materials, in accordance with dampproofing manufacturer's instructions.

B. Remove efflorescence by scrubbing surface with muriatic acid and thoroughly rinsing with water.

C. Allow 3 days drying time following washing down of substrate surfaces.

D. Fill all cracks, voids, and honeycombs with mortar to provide sound surface for dampproofing.

3.04 APPLICATION

A. Apply dampproofing with a brush, or with manufacturer-approved low pressure airless spray equipment with a coarse nozzle.

B. Apply materials at rate and as recommended by the manufacturer and in two coats.

C. Start application at top of wall and work down surface, keeping a wet edge at all times, forming a continuous, unbroken film, free from pinholes and other surface breaks.

3.05 ADJUST AND CLEAN

A. Clean spillage and overspray from adjacent surfaces as recommended by manufacturer.

3.06 FIELD QUALITY CONTROL

A. After dampproofing has dried, spray coat surfaces with water.

B. Recoat surfaces that show water absorption, as recommended by manufacturer. To prevent blistering, protect surfaces from heat and direct sunlight until dried, then backfill.

3.07 PRODUCT DELIVERY, STORAGE, AND HANDLING

A. Deliver materials in original sealed containers, clearly marked with manufacturer's name, brand name, and type of material.

B. Store materials in area where temperatures are not less than 50°F or over 85°F, unless otherwise authorized by manufacturer.

3.08 APPLICATION SCHEDULE

A. *Apply dampproofing to all exterior surfaces of all cast-in-place and pre-cast concrete*

structures (walls, footings, manholes, wetwell) below finish ground level to at least 4" above finished ground surface. Also apply to slab thickened edges. See Structural drawings. Do not apply to interior of water holding basins (Runoff Lift Station wetwell).

END OF SECTION 07 11 00

SECTION 07 21 00
BUILDING INSULATION

PART 1 - GENERAL

1.01 WORK INCLUDED

A. This section applies to insulation for the Conex Control Building

B. Section Includes:

1. Thermal Batt Insulation
2. Extruded polystyrene rigid board insulation
3. Spray insulation

1.02 SUBMITTALS

A. General: Submit in accordance with Section 01 33 00.

B. Product Data: Submit product data and manufacturer's instructions for each product.

1.03 QUALITY ASSURANCE

A. Single Source Responsibility: Furnish each insulation type from one manufacturer for entire Project, unless otherwise acceptable to Architect.

1.04 DELIVERY, STORAGE, AND HANDLING

A. Comply with requirements of Section 01 60 00.

B. Identify products with appropriate markings of applicable testing and inspecting organization.

C. Storage and Protection:

1. Store materials raised off floor or ground and under cover to keep dry.
2. Protected from weather, direct sun light, contamination, sources of ignition, and damage from construction operations.

PART 2 - PRODUCTS

2.01 MATERIALS

A. Thermal & Sound Control Batts and Rolls

1. Manufacturer
   a. Owens Corning or equal.
2. General Requirements:
   a. Glass fiber composition, friction fit type, un-faced. Verify thickness based on wall type.
   b. Minimum R-value per Wall Type descriptions (see drawings)
3. Location

a. All framed wall cavities.

B. Extruded polystyrene rigid board insulation

1. Manufacturer:

a. Owens Corning Foamular 250 or approved equal

2. General Requirements:

a. Thickness/R value per drawings.

3. Location:

a. New framed wall at Administration building
b. At foundation perimeter, adjacent to exterior grade, apply min. R-10 insulation to 24" below grade.

C. Closed Cell Spray Foam Insulation

1. Manufacturer:

a. Johns Manville Corbond III or approved equal.

2. Location:

a. Door and window gaps
b. May be used as substitution for batt insulation at exterior Administration wall.

D. Polyiso roofing insulation

1. See Membrane Roofing specification

PART 3 - EXECUTION

3.01 EXAMINATION

A. Examine conditions and proceed with work in accordance with Section 01700.

B. Verify that work of other trades which will be covered by insulation is complete, approved, and tested.

3.02 INSTALLATION

A. General:

1. Install in strict accordance with manufacturer's recommendations including specific requirements per product type below.

B. Protect finished work in accordance with Section 01 70 00.

C. Chamfer top of foundation insulation for full slab coverage.

END OF SECTION 07 21 00

SECTION 07 90 00
JOINT SEALANTS

PART 1 - GENERAL

1.01 WORK INCLUDED

A. This section includes the work necessary to furnish and install, complete, sealant and backing for all concrete joints.

1.02 GENERAL REQUIREMENTS

A. See CONDITIONS OF THE CONTRACT and Division 1, GENERAL REQUIREMENTS, which contain information and requirements that apply to the work specified herein and are mandatory for this project.

B. Related Sections include:

1. Division 03 - Concrete

C. Performance: Provide elastomeric joint sealants that establish and maintain watertight and airtight continuous joint seals without staining or deteriorating joint substrates.

1.03 SUBMITTALS

A. Submittals shall be made in accordance with Section 01 33 00 – Submittal Procedure

B. Submit the following:

1. Product data: Submit manufacturer's literature, specifications, surface preparation and application instructions for joint sealant materials.
2. Samples: For each material proposed submit sample of color intended, when required to match joint substrate or range of colors for selection.
3. Sealant schedule: Submit sealant schedule indicating joint size and special conditions as well as, manufacturer, type and color of proposed product for each application.
4. Certificates of compliance: proposed materials meet reference standards and specification requirements.
5. Contract closeout submittals: special guarantee.

1.04 DELIVERY, STORAGE, AND HANDLING

A. Deliver sealants to the jobsite in sealed containers, each bearing manufacturer's name and product designation.

B. Store and protect sealant products from damage, deterioration, and contamination in accordance with manufacturer's written recommendations.

1.05 QUALITY ASSURANCE

A. Installer qualifications: An experienced installer who has specialized in installing joint sealants similar in material, design, and extent to those indicated for this project and

whose work has resulted in joint sealant installations with a record of successful in-service performance.

1.06 ENVIRONMENTAL CONDITIONS

A. Ambient Temperature: Between 40 and 80 degrees F when sealant is applied.

1.07 SPECIAL GUARANTEE

A. Product: Furnish manufacturer's extended guarantee or warranty, with Owner named as beneficiary, in writing, as special guarantee. Special guarantee shall provide for correction or, at the option of Owner, removal and replacement of work specified in this section found defective during a period of 5 years after the date of Substantial Completion. Duties and obligations for correction or removal and replacement of defective work shall be as specified in the General Conditions.

B. Conditions: No adhesive or cohesive failure of sealant.

C. Sealed joints: watertight and weathertight with normal usage.

PART 2 - PRODUCTS

2.01 GENERAL

A. The use of a manufacturer's name and model or catalog number is for the purpose of establishing the standard of quality and general configuration desired only. Products of other manufacturers will be considered in accordance with the General Conditions.

2.02 MASTIC JOINT FILLER

A. The mastic joint filler shall be a ½-inch, pre-molded, non-extruded, resilient type mastic joint filler conforming to ASTM D 1751.

2.03 SEALANT MATERIALS

A. Type 1 - Silicone, Non-sag, Not Immersible: Silicone base, single-component, chemical curing; meeting the requirements of Federal Specification TT-S-001543, non-sag type, Class A; capable of withstanding movement up to 50 percent of joint width; Shore "A" hardness of 50 maximum; non--staining. Use No. 790 manufactured by Dow Corning Corporation; "Silpruf" manufactured by General Electric; or equal.

B. Type 2 - Multi-Part Polyurethane, Self-Leveling, Immersible: Polyurethane base, multi-component, chemical curing; meeting the requirements of Federal Specifications TT-S-00227, self-leveling Type I, Class A; capable of being continuously immersed in water, withstand movement of up to 25 percent of joint width; uniform, homogeneous, and free from lumps, skins, and coarse particles when mixed; Shore "A" hardness of minimum 15 and maximum 50; non-staining, nonbleeding. Use Sonolastic Paving Joint Sealant manufactured by Sonneborn; Urexspan NR-200 manufactured by Pecora Corp.; Iso-Flex 880GB manufactured by H.S. Peterson Co.; Vulkem 245 manufactured by Mameco International; or equal.

C. Type 3 - Multi-Part Polyurethane, Non-sag, Immersible: Polyurethane base, multi-component, chemical curing; meeting the requirements of Federal specifications TT-S-

00227, non-sag Type II, Class A; capable of being continuously immersed in water, withstand movement of up to 25 percent of joint width; uniform homogeneous, and free from lumps, skins, and coarse particles when mixed; Shore "A" hardness of minimum 15 and maximum 50; non-staining, nonbleeding. Use Iso-Flex 881 manufactured by H.S. Peterson Co.; Vulkem 922 manufactured by Mameco International; PRC 270 manufactured by Product Research Corp.; Sonolastic NP-II manufactured by Sonneborn; or equal.

D. Type 4 - Multi-Part Polyurethane, Non-sag, Not Immersible: Polyurethane base, multi-component, chemical curing; meeting the requirements of Federal specifications TT-S-00227, non-sag Type II, Class A and ASTM C 920, Type M, Grade NS, Class 25; withstand movement of up to 25 percent of joint width; uniform, homogeneous, and free from lumps, skins, and coarse particles when mixed; Shore "A" hardness of minimum 15 and maximum 50; non-staining, nonbleeding; color as selected. Use Sonolastic NP-II manufactured by Sonneborn; Dynatrol II manufactured by Pecora Corp.; Dymeric manufactured by Tremco; Isoflex 2000 manufactured by H.S. Peterson Co.; Vulkem 227 manufactured by Mameco International; or equal.

E. Type 5 - One-Part Polyurethane, Immersible: Polyurethane base, single-component, chemical curing; conforming to Federal specification TT-S-00230; capable of being continuously immersed in water, withstand movement of up to 25 percent of joint width; Shore "A" hardness of minimum 15 and maximum 50; non-staining, nonbleeding. For non-sag Type II, Class A, use Sonolastic NP-I manufactured by Sonneborn; Sikaflexla No. 430 manufactured by Sika Chemical Corp.; Vulkem 116 manufactured by Mameco International; or equal. For self-leveling Type I, Class A, use Sonolastic SL-1 manufactured by Sonneborn; Vulkem 45 manufactured by Mameco International; Sikaflex 12SL manufactured by Sika Chemical Corp.; or equal.

F. Type 6 - One-Part Polyurethane, Not Immersible: Polyurethane base, single-component, chemical curing; meeting the requirements of Federal specification TT-S-00230, non-sag Type II, Class A; withstand movement of up to 25 percent of joint width; Shore "A" hardness of minimum 15 and maximum 50; non-staining, nonbleeding. Use Dynatrol I manufactured by Pecora Corp.; Dymonic manufactured by Tremco; Sonolastic NP-I manufactured by Sonneborn; or equal.

G. Type 7 - Multi-Part Polysulfide, Immersible: Polysulfide base, two-component, chemical curing; meeting the requirements of Federal Specification TT-S-00227, Type I self-leveling, Type II non-sagging, Class A, uniform, homogeneous and free from lumps, skins, and coarse particles when mixed; capable of being continuously immersed in water, withstand movement up to 25 percent of joint width; Shore "A" hardness of minimum 15 and maximum 50; non-staining and nonbleeding. Use CM-60, two-part manufactured by W.R. Meadows; Sonolastic Two manufactured by Sonneborn; or equal.

H. Type 8 - One-Part Polysulfide, Non-sag, Not Immersible: Polysulfide base, single-component, chemical curing; meeting the requirements of Federal Specification TT-S-00230, Type II non-sag, Class A; capable of withstanding movement up to 20 percent of joint width; Shore "A" hardness of minimum 15 and maximum 50; non-staining and

nonbleeding. Use CM-60, one-part manufactured by W.R. Meadows; Sonolastic One manufactured by Sonneborn; Sikaflex 440 manufactured by Sika Chemical Corp.; PRC 7000 manufactured by Product Research Corp.; or equal.

I. Type 9 - One-Part Acrylic Terpolymer, Non-sag: Acrylic base, single-component, solvent curing; meeting the requirements of Federal specification TT-S-00230, Type I non-sag, Class B; capable of withstanding movement up to 7.5 percent of joint width; Shore "A" hardness of maximum 55; non-staining and nonbleeding. Use 60+ Unicrylic manufactured by Pecora Chemical Corp.; Mono manufactured by Tremco; or equal.

J. Type 10 - Sanitary Sealant: Silicone sealant similar to Type 1, above, formulated to resist mold growth and repeated exposure to high humidity while retaining adhesion, flexibility, and color. Use Dow Corning Bathtub Caulk 786; General Electric Sanitary Sealant; or equal.

K. Type 11 - Fire-Resistant Penetration Seal: Medium fire-resistant foam that retains stability at high temperatures. Use 3-6548 Silicone RTV Fire Stop Sealant or Foam manufactured by Dow Corning Corporation; Fire Barrier Caulk CP25 and Putty 303 manufactured by 3M Corp.; General Electric Pensil 851; or equal.

2.04 BACKUP MATERIAL

A. Non-gassing, extruded, closed-cell round polyethylene foam rod compatible with sealant used. Size as shown or as recommended by manufacturers for all joints greater than 3/16-inch wide. Use "Minicel" as manufactured by Haveg Industries, Inc.; "Ethafoam SB" manufactured by Dow Corning; "Sonofoam" manufactured by Sonneborn; HBR manufactured by Hercules, Inc.; or equal.

2.05 BOND BREAKER

A. Pressure sensitive tape recommended by sealant manufacturer to suit application.

2.06 JOINT CLEANER

A. Noncorrosive and nonstaining type, recommended by sealant manufacturer; compatible with joint forming materials.

2.07 PRIMER

A. Non-staining type recommended by sealant manufacturer to suit application.

2.08 SEALANT COLOR

A. Unless specifically noted, sealant color shall generally match or complement the color of the principal material adjoining the area of application or as selected by Architect.

2.09 TAPE SEALANT

A. Closed cell polyvinyl chloride (PVC) foam, in black color, coated on both sides with a modified acrylic pressure-sensitive adhesive, in 3/4-inch width by length as required by sufficient thickness, as recommended by manufacturer, for particular application, meeting the following requirements:

1. Tensile Strength (ASTM D 412, Die C): 80 psi

2. Elongation (ASTM D 412, Die C): 125 percent
3. Compression Set (ASTM D 1056): 30 percent max
4. Compression Deflection (ASTM D 1056) at 25 percent Deflection: 2.5 psi
5. Low Temperature Flexibility, 5 hours at -40 degrees F: No cracking
6. Heat Resistance/Maximum Shrinkage, 70 hours at 212 degrees F: 1.5 percent
7. Staining (ASTM D 925) on Most Substrates: None
8. Water Absorption by Weight at 30 percent Compression: 24 percent
9. Density per Cubic Foot (ASTM D 3574) 10 pounds
10. Thermal Conductivity (k factor): 0.24

PART 3 - EXECUTION

3.01 GENERAL

A. Use of more than one material for the same joint is not allowed unless approved by the sealant manufacturer.

B. Install joint sealants in accordance with ASTM C962.

C. Sealants shall be self-leveling (S/L) for horizontal and sloping joints with a maximum slope of 1 percent. Non-sag sealants (N/S) shall be used for steeper sloped joints, vertical joints, and overhead joints. Immersible sealant may be used for non-immersible applications.

D. The one-part polysulfide (Type 8) and polyurethane (Types 5 and 6) and the acrylic (Type 9) sealants can be used in joints to maximum 1-inch width. Multi-part polyurethane (Types 2, 3, and 4) and polysulfide (Type 7) and silicone sealants can be used in joints to 2-inch maximum width. For joints wider than 2-inch, consult manufacturer for proper product application. Follow sealant manufacturer's recommendations.

E. Sealants used in water holding structures must be approved for use in domestic wastewater applications.

3.02 PREPARATION

A. Verify that joint dimensions, and physical and environmental conditions, are acceptable to receive sealant.

B. All surfaces to be sealed shall be clean, dry, sound, and free of dust, loose mortar, oil, and other foreign materials.

1. Mask adjacent surfaces where necessary to maintain neat edge.
2. Starting of work will be construed as acceptance of all sub-surfaces.

C. Verify that joint shaping materials and release tapes are compatible with sealant.

D. Examine joint dimensions and size materials to achieve required width/depth ratios.

E. Use joint filler to achieve required joint depths, to allow sealants to perform properly.

F. Use bond breaker where recommended by sealant manufacturer.

3.03 MASTIC JOINT FILLER

A. Preformed joint filler shall be installed in accordance with manufacturer's specifications.

3.04 CAULKING AND SEALANT INSTALLATION

A. Install backup material as recommended by sealant manufacturer. Where possible, provide full length sections without splices.

B. Seal all joints around window, door, and louver frames; expansion joints; and elsewhere as indicated.

C. Apply all materials following manufacturer's recommendation and instructions, filling joint completely from back to top, without voids.

D. Apply sealant within recommended temperature ranges. Consult manufacturer when sealant cannot be applied within recommended temperature ranges.

E. Locate tape sealant where indicated on Drawings and install in strict accordance with manufacturer's instructions.

F. Drive caulking compound into the grooves with a caulking gun with sufficient pressure to force out air and to fill grooves solidly using a nozzle of proper size to fit width of grooves. Exposed surface of compound shall be tooled free of wrinkles and uniformly smooth. Leave all adjoining surfaces free of caulking material. Finish joints free of air pockets, foreign embedded matter, ridges, and sags.

3.05 CLEANING

A. Clean surfaces next to the sealed joints of smears or other soiling resultant of sealing application.

B. Replace any damaged surfaces resulting from joint sealing or cleaning activities.

3.06 APPLICATION SCHEDULE

A. This schedule lists the sealant types acceptable for each joint location. Use as few different sealant types as possible to meet the requirements of this project.

Joint Location	Sealant Type(s)
1. Expansion/Contraction and Control Joints at:	
Concrete Walls	1, 3, 4, 5, 6, 7
Concrete Floor Slabs	2,5
Masonry and Precast Walls	1, 3, 4, 5, 6, 7
Metal Door, Window, and	

Louver Frames (Exterior)	1, 5, 6, 8
Metal Door, Window, and Louver Frames (Interior)	1, 5, 6, 8, 9
Wall Penetrations (Exterior)	1, 5, 6, 8
Wall Penetrations (Interior)	1, 5, 6, 8
Floor Penetrations	5, 6, 7
Ceiling/Roof Penetrations	1, 3, 4, 5, 6, 7
Sheet Metal Flashings	1, 3, 5, 7

2. Other Joints:

Threshold Sealant Bed	5
Immersed Concrete (Vertical and Sloped)	3, 5
Immersed Concrete (Horizontal)	2, 5
Openings Around Pipes, Conduits, and Ducts Through Fire Rated Construction	11
Concrete Form Snap-Tie Holes	4,6
Between Counter Tops and Backsplashes	10
Around Plumbing Fixtures	10

END OF SECTION 07 90 00

DIVISION 9

FINISHES, PAINT, COATINGS

SECTION 09 06 00
SCHEDULES FOR FINISHES

PART 1 - GENERAL

1.01 SUBMITTALS

A. Submittal requirements are specified in appropriate product sections.

PART 2 - PRODUCTS

2.01 GENERAL

A. Products and materials referred to in this section are specified in appropriate product sections.

PART 3 - EXECUTION

3.01 INSTALLATION

A. Requirements for incorporation of scheduled products into the Work are specified in appropriate product sections.

B. Architectural painting and coating schedules are depicted on the Drawings.

C. In the event schedules for painting and coating systems conflict, the requirements for High Performance Painting and Coating shall govern.

D. Paint exposed surface whether or not painting system is designated in “schedules”, except where a surface or material is specifically indicated not to be painted or is to remain natural. Where an item or surface is not specifically mentioned, paint the same as similar adjacent materials or surfaces. If coating system is not designated, the Engineer will select from coating systems available.

3.02 SUPPLEMENTS

A. The supplements listed below, are a part of this Specification.

1. High Performance Coating System Schedule: A tabulation of coating systems for equipment and areas as depicted on the Drawings.

High Performance Painting & Coating Schedule

Building	Space	Material or Surface	Coating System	Specification
Conex Control Building	Motor Control Center Room	Walls and Ceiling	Flat Latex or Alumabond	09 90 00 3.11.A.3 or 13 34 23
		Ferrous metals, all interior	System 4	09 90 02
		Equipment	System 4	09 90 02
		PVC, CPVC, and FRP	System 8	09 90 02
		Process Piping	System 4	09 90 02
	Office Space	Walls and Ceiling	Flat Latex or Alumabond	09 90 00 3.11.A.3 or 13 34 23
		Ferrous metals, all interior	System 2	09 90 02
Runoff Lift Station	All Spaces	Ferrous Metals	System 4	09 90 02
		Process Piping	System 4	09 90 02
		Precast Concrete, Immersion and High H_2S Exposure	System 11	09 90 02
Curing Control Shed	All Spaces	Walls		09 90 00 3.11.A.3 or 13 34 21
		Ceiling		09 90 00 3.11.A.3 or 13 34 21
		Floor		13 34 21
		Interior Ferrous Metals, Non-immersion	System 2	09 90 02

END OF SECTION 09 06 00

SECTION 09 90 00
PAINTING AND COATING

PART 1 - GENERAL

1.01 SUMMARY

A. Section includes surface preparation and field application and finishing of exposed interior and exterior items and surfaces.

B. Related Divisions:

1. Division 3 – Concrete and Grout
2. Division 4 - Masonry
3. Division 5 - Metals
4. Division 6 – Woods, Plastics, Composites
5. Division 7 – Thermal & Moisture Protection
6. Division 11 – Equipment
7. Division 40 – Process Interconnections

1.02 REFERENCES

A. American Society for Testing and Materials:

1. ASTM D16 - Standard Terminology Relating to Paint, Varnish, Lacquer, and Related Products.
2. ASTM D4442 - Standard Test Methods for Direct Moisture Content Measurement of Wood and Wood-Base Materials.

B. Painting and Decorating Contractors of America:

1. PDCA - Architectural Painting Specification Manual.

C. SSPC: The Society for Protective Coatings:

1. SSPC - Steel Structures Painting Manual.

1.03 DEFINITIONS

A. Conform to ASTM D16 for interpretation of terms used in this section.

1.04 SUBMITTALS

A. Section 01 33 00 - Submittal Procedures: Submittal procedures.

B. Product Data: Submit data on finishing products.

C. Manufacturer's Installation Instructions: Submit special surface preparation procedures and substrate conditions requiring special attention.

1.05 CLOSEOUT SUBMITTALS

A. Operation and Maintenance Data: Submit data on cleaning, touch-up, and repair

of painted and coated surfaces.

1.06 QUALIFICATIONS

A. Manufacturer: Company specializing in manufacturing products specified in this section with minimum three years documented experience.

B. Applicator: Company specializing in performing work of this section with minimum three years documented experience.

1.07 DELIVERY, STORAGE, AND HANDLING

A. Section 01 60 00 - Product Requirements: Product storage and handling requirements.

B. Deliver products to site in sealed and labeled containers; inspect to verify acceptability.

C. Container Label: Include manufacturer's name, type of paint, brand name, lot number, brand code, coverage, surface preparation, drying time, cleanup requirements, color designation, and instructions for mixing and reducing.

D. Paint Materials: Store at minimum ambient temperature of 45°F and maximum of 90°F, in ventilated area, and as required by manufacturer's instructions.

1.08 ENVIRONMENTAL REQUIREMENTS

A. Do not apply materials when surface and ambient temperatures are outside temperature ranges required by paint product manufacturer.

B. Do not apply exterior coatings during rain or snow when relative humidity is outside humidity ranges, or moisture content of surfaces exceed those required by paint product manufacturer.

C. Minimum Application Temperatures for Latex Paints: 45 degrees F for interiors; 50 degrees F for exterior; unless required otherwise by manufacturer's instructions.

D. Minimum Application Temperature for Varnish and oil based Finishes: 65 degrees F for interior or exterior, unless required otherwise by manufacturer's instructions.

E. Provide lighting level of 80 ft candle measured mid-height at substrate surface in order to assure proper visual quality assurance.

1.09 SEQUENCING

A. Section 01 11 00 - Summary: Work sequence.

B. Sequence application to the following:

1. Do not apply finish coats until paintable sealant is applied.

2. Back prime wood trim before installation of trim.

1.10 WARRANTY

A. Furnish five year manufacturer warranty for paints and coatings.

1.11 EXTRA MATERIALS

A. Supply 1 gallon of each color, type, and surface texture; store where directed.

B. Label each container with color, type, texture and room locations in addition to manufacturer's label.

PART 2 - PRODUCTS

2.01 GENERAL

A. Provide Products (Paint, Primer, Sealers and Block Fillers) as manufactured by:

1. Sherwin Williams (SW)
2. Benjamin Moore & Co.;
3. PPG Industries;
4. Tnemec Company, Inc;
5. Glidden Professional.
6. Columbia Paints.

B. Listing of products by manufacturer’s trade name is not intended to exclude equivalent products by other manufacturers identified above. For products not specifically named, submit substitution request in accordance with Section 01 60 00.

2.02 FILLERS AND SEALERS

A. Interior Block Filler:

1. Benjamin Moore and Company: Super Craft Block Filler No. 285
2. PPG Industries, Inc.: Speedhide Acrylic Latex Masonry Block Filler, 6-7.
3. Sherwin-Williams: Interior/Exterior Block Filler No. B25W25.
4. Tnemec Company, Inc.: Latex Masonry Filler No. 54-560.

B. Single Component Masonry Conditioner:

1. Benjamin Moore: Acrylic Masonry Sealer (066)
2. PPG Industries, Inc.: Masonry Surface Sealer No. 6-8.
3. Sherwin-Williams: Loxon Masonry Conditioner A24

C. Paste Wood Filler:

1. Benjamin Moore and Company: Benwood Wood Filler #238
2. Sherwin-Williams: Sherwood Wood Filler.

D. Sanding Sealer (Vinyl Toluene Copolymer):

1. Benjamin Moore and Company: IWF Sanding Sealer Clear No. 413.

2. PPG Industries, Inc.: Speedhide Alkyd Sanding Sealer, 6-10.
3. Sherwin-Williams: Wood ClassicsClassics Fast Dry Sanding Sealer.

E. Stain Sealer:

1. Benjamin Moore and Company: Moore's Stain Blocking Primer No 202.
2. Sherwin-Williams: Preprite Problock Latex & Alkyd Primer/Sealer

2.03 PRIME COATINGS

A. Exterior Alkali Resistant Primer:

1. Benjamin Moore and Company: Super Spec Exterior Latex Primer No. 169
2. PPG Industries, Inc.: Alkali Resistant Primer No. 6-3.
3. Sherwin-Williams: Loxon Exterior Masonry Primer A24 Series

B. Interior Alkyd Enamel Undercoater:

1. Benjamin Moore and Company: Super Spec Alkyd Enamel Undercoater C245
2. PPG Industries, Inc.: Speedhide Quick Drying Enamel Undercoater, 6-6.
3. Sherwin-Williams: Wall and Wood Primer B49WZ2.

C. Alkyd-Phenolic Primer:

1. Benjamin Moore: M07 Universal Metal Primer
2. PPG Industries, Inc.: Multiprime Universal Primer No. 97-682.
3. Sherwin-Williams: Ken Kromik Universal B50NZ Series.
4. Tnemec Company, Inc.: Series 37 Chem-Prime.

D. Etching Metal Primer:

1. PPG Industries, Inc.: Polyclutch Wash Primer No. 97-687.
2. Sherwin-Williams: DTM Wash Primer B71Y1.
3. Tnemec Company, Inc.: Tneme-Grip No. 32-1210.

E. Ethyl Silicate Zinc Primer:

1. Benjamin Moore: M01/M02 Inorganic Zinc Primer
2. PPG Industries, Inc.: Metalhide 1001 Inorganic Zinc Rich Primer, 97-673/97-674.
3. Sherwin-Williams: Zinc Clad II HS Ethyl Silicate B69BVZ3.
4. Tnemec Company, Inc.: Tneme-Zinc No. N90E92.

F. Acrylic Latex Ferrous Metal Primer:

1. Benjamin Moore: Acrylic Metal Primer M04
2. Sherwin Williams: Pro Cryl Universal Metal Primer B66W310

G. Exterior Alkyd Primer:

1. Benjamin Moore and Company: Super Spec Alkyd Exterior Primer No. 176.
2. PPG Industries, Inc.: Speedhide Exterior Alkyd Wood Primer, 6-9.
3. Sherwin-Williams: A-100 Exterior Wood Primer Y24.
4. Tnemec Company, Inc.: Undercoater No. 36-603.

H. Galvanized Primer:

1. Benjamin Moore: Acrylic Metal Primer M04
2. PPG Industries, Inc.: Galvanized Steel Primer No. 6-209.
3. Sherwin-Williams: Galvite HS B50WZ30.
4. Tnemec Company, Inc.: Galv-Gard Series 22.

I. Latex Primer:Interior

1. Benjamin Moore: Super Spec Primer Sealer & Latex Undercoat No 253.
2. PPG Industries, Inc.: Speedhide Latex Wall Sealer No. 6-2.
3. Sherwin-Williams: PrepRite Primer B28W200
4. Tnemec Company, Inc.: PVA Sealer No. 51-792.

J. Latex Primer Exterior :

1. Benjamin Moore: Super Spec Latex Exterior Primer No. 169
2. Sherwin Williams; A-100 Latex Primer B42W41

K. Long-Oil Alkyd Primer:

1. Benjamin Moore: Moorwhite Penetrating Alkyd Primer No. 100
2. PPG Industries, Inc.: Speedhide Alkyd Red Rust Inhibitive Steel Primer, 6-208.
3. Sherwin-Williams: Kromik Metal Primer E41N1.
4. Tnemec Company, Inc.: Tnemec Primer Series 10.

2.04 WATER REDUCIBLE COATINGS

A. Industrial 100% Acrylic:

1. Benjamin Moore: DTM Acrylic Gloss (M28) or Semi-Gloss (M29)
2. PPG Industries, Inc.: Water Base Inhibitive Primer No. 6-712.
3. Sherwin-Williams: DTM Acrylic.
   a. Gloss: B66-100.
   b. Semi-Gloss: B66-200.
4. Tnemec Company, Inc.: Tneme-Cryl Series 6 (Flat) and Series 7 (Semi-gloss).

B. Interior Premium Acrylic Latex Enamel:

1. Benjamin Moore and Company:

   a. Eggshell: Super Spec Latex Eggshell Enamel (286)
   b. Pearl Finish:: Super Sec Latex Pearl Finish (277)
   c. Semi-Gloss: Super Spec Latex Semi-Gloss Enamel (283)
   d. Gloss: Impervex Metal & Wood Enamel no. 309

2. PPG Industries, Inc.:

   a. Eggshell: Speedhide Acrylic Latex Enamel, 6-411.
   b. Semi-Gloss: Speedhide Acrylic Latex Enamel, 6-510.

3. Sherwin-Williams:

   a. Eggshell: ProMar 200 EgShel B20W200.
   b. Semi-Gloss: Pro Mar 200 Latex Semi Gloss B31 Series
   c. Gloss: Pro Classic Gloss B21

C. Interior Acrylic Vinyl Latex Flat Paint:

1. Benjamin Moore and Company: Super Spec Latex Flat (275)

2. PPG Industries, Inc.: Speedhide Acrylic Latex Flat Wall Paint, 6-70.

3. Sherwin-Williams: ProMar 200 Flat B30W200

D. Water Based Epoxy:

1. Benjamin Moore and Company: Super Spec Acrylic Epoxy Enamel No. 256

2. PPG Industries, Inc.: Pitt-Glaze Water Based Acrylic Epoxy Enamel.

3. Sherwin Williams: Water Based Epoxy B70-200.

2.05 WOOD STAINS AND COATINGS

A. Masking Wiping Stain:

1. Benjamin Moore and Company: Benwood Interior Stain No. 234

2. PPG Industries, Inc.: Rez Interior Stain No. 77-302.

3. Sherwin-Williams: Wood Classics A49-200.

B. Non-Masking Penetrating Stain:

1. Sherwin-Williams: Sherwood S64.

C. Alkyd Polyurethane Varnish:

1. Benjamin Moore and Company: Benwood Polyurethane Finishes No.424 (Flat), 435 (Satin), and 428 (Gloss).

2. PPG Industries, Inc.: Rez Polyurethane Varnish No. 77-9 (Satin), 77-5 (Gloss).

3. Sherwin-Williams: Wood Classics Polyurethane Varnish A67 Series.

4. Minwax® Wipe-On Poly.

D. Semi-Transparent Stain:

1. Benjamin Moore and Company: Benjamin Moore Alkyd Semi-Transparent Stain No. 328
2. PPG Industries, Inc.: Rez Stain Wood Preservative & Water Repellant Stain No. 77-860.
3. Sherwin-Williams: WoodScapes Semi-Transparent Stain A15T5.

E. Spar Varnish:

1. Benjamin Moore and Company: Impervo 440 Spar Varnish.
2. PPG Industries, Inc.: Rez Spar Varnish No. 77-10.
3. Sherwin-Williams: Helmsman /Minwax Spar Varnish.

2.06 ACCESSORY MATERIALS

A. Muriatic acid, mildewcide, TSP (tri-sodium phosphate), acidic-detergent, zinc sulfate, sodium metasilicate, and solvent: Commercially available, non-damaging to surface being cleaned; as specified in PDCA Specification Manual; acceptable to coating manufacturer.

B. Metal Conditioner: Proprietary phosphoric acid based, etching type solution; acceptable to coating manufacturer.

C. Rust Inhibitor: Water containing 0.32 percent of sodium nitrite and 1.28 percent by weight of secondary ammonium phosphate (dibasic); or water containing 0.2 percent by weight of chromic acid or sodium chromate or sodium dichromate or potassium dichromate.

D. Spackling compound, putty, plastic wood filler, liquid de-glosser, latex patching plaster, latex base filler, thinners, and other materials not specifically indicated but required to achieve finishes specified: Pure, of highest commercial quality, compatible with coatings and acceptable to coating manufacturer.

E. Do not use products of different manufacturers in combination.

2.07 CONCRETE FLOOR SEALER (SC)

A. Manufacturers

1. H & C Concrete Sealer Wet – Look Water Based (Basis of Design)
2. Substitutions: Per Section 01 61 00 – Product Requirements.

B. Products

1. 100% Clear Acrylic Sealer
2. Slip Resistant Additive
   a. H & C Shark Grip

C. Installation: Per manufacturer's instructions.

2.08 CONCRETE WALL SEALER

A. Manufacturers:

1. Sika Corporation: Sikagard 62 Epoxy Coating

a. 2-component, 100% solids, moisture-tolerant epoxy resin
b. High-build, protective, dampproofing and waterproofing vapor- barrier system

2. Substitutions: Per Section 01 61 00 – Product Requirements.

2.09 BLOCK FILLER

A. Manufacturers

1. Sherwin Williams, Prep Rite.

2. Substitutions: Per Section 01 61 00 – Product Requirements.

2.10 MIXING

A. Use factory prepared colors matching approved samples. Site tinting will not be permitted.

B. Thoroughly mix and stir coatings before use to ensure homogeneous dispersion of ingredients. Prior to application, blend multiple containers of same material and color by pouring from one container to another several times to ensure uniform consistency, color, and smoothness.

C. Mix only in clean mixing pails of material recommended by manufacturer to avoid contamination.

D. Remove film which may form on surface of material in containers and strain material before using. Stir frequently during use to maintain pigments in suspension. Do not stir film into material.

E. Apply coatings of consistency recommended by manufacturer. Thin only within recommended limits using thinners approved by coating manufacturer.

2.11 COLORS AND FINISHES

A. Refer to the Painting & Coating Schedule at the end of this Section and also on the Project Drawings.

PART 3 - EXECUTION

3.01 EXAMINATION

A. Section 01 70 00 - Execution Requirements: Coordination and project conditions.

B. Verify surfaces and substrate conditions are ready to receive Work as instructed by product manufacturer.

C. Examine surfaces scheduled to be finished prior to commencement of work. Report conditions capable of affecting proper application.

D. Test shop applied primer for compatibility with subsequent cover materials.

E. Measure moisture content of substrates using recently calibrated electronic moisture meter. Do not apply coatings if moisture content of surfaces exceeds lesser of percentages listed below or those required by coating manufacturer. If excess moisture content exists and cannot be reduced, obtain written approval of coating manufacturer before application of coatings.

1. Gypsum board and gypsum plaster: 17 percent.
2. Architectural woodwork, trim, cabinets, and casework: 10 percent; measure with resistance-type meter in accordance with ASTM D4442.
3. Common board and dimension lumber: 12 percent; measure with resistance-type meter in accordance with ASTM D4442.
4. Masonry, concrete, CMU, and Portland cement plaster: 17 percent for solvent reduced coatings. Test concrete floors in accordance with ASTM D4263.
5. Canvas and cotton insulation coverings: 12 percent max.
6. Concrete Floors: 8 percent.

3.02 PREPARATION

A. Protect completed construction from damage. Furnish drop cloths, shields, and protective methods to prevent spray, splatter, or droppings from disfiguring other surfaces.

B. Remove surface hardware, mechanical diffusers, escutcheons, registers, electrical plates, light fixture trim, fittings, fastenings and similar items prior to preparing surfaces for finishing. Provide surface-applied protective masking for non-removable items. Carefully store removed items for reinstallation.

C. Remove mildew by scrubbing with mildewcide. Rinse thoroughly with clean water and allow surface to dry completely.

D. Before beginning application of coatings, ensure surfaces are clean, dry, and free of dirt, dust, rust or rust scale, oil, grease, mold, mildew, algae, efflorescence, release agents, or any other foreign material which could adversely affect coating adhesion or finished appearance.

E. Uncoated Steel and Iron Surfaces: Remove grease, mill scale, weld splatter, dirt, and rust. Where heavy coatings of scale are evident, remove by hand or power tool wire brushing or sandblasting; clean by washing with solvent. Apply treatment of phosphoric acid solution, ensuring weld joints, bolts, and nuts are similarly cleaned. Spot prime paint after repairs.

F. Shop Primed Steel Surfaces: Sand and scrape to remove loose primer and rust. Feather edges to make touch-up patches inconspicuous. Clean surfaces with solvent. Prime bare steel surfaces.

G. Metal Doors Scheduled for Painting: Prime metal door top and bottom edge

surfaces.

3.03 SURFACE PREPARATION FOR NEW WORK

A. General:

1. Correct minor defects.
2. Remove temporary labels, wrappings, and protective coverings from surfaces to be coated.
3. Seal stains, marks, and other imperfections which may bleed through surface finishes.

B. Aluminum:

1. Clean in accordance with SSPC SP1 "Solvent Cleaning".
2. Apply etching type primer.

C. Concrete:

1. Prior to application of coatings, allow surfaces to cure minimum 60 days.
2. Remove dirt, scale, powder, laitance, and bond breakers by light sandblasting to minimum 1.5 mil profile.
3. Remove oil and grease with solution of TSP; rinse well.
4. Remove stains caused by weathering or corroding metals with solution of sodium metasilicate applied after thoroughly wetting surface with potable water; allow to dry.
5. Fill cracks and voids with compatible filler.
6. Brush-off blast floors to lightly abrade surface without entirely removing surface or exposing underlying aggregate.

D. Gypsum Board:

1. Fill remaining cracks, depressions, holes and other irregularities with spackling compound.
2. Sand rough or high spots left by joint cement or spackling compound without damaging paper face.
3. Remove dust by wiping with damp cloths and vacuuming.

E. Masonry:

1. Prior to application of coatings, allow surfaces to cure minimum 28 days.
2. Remove dirt, scale, loose mortar, efflorescence, and powder by wire brushing or by other approved methods.
3. Remove oil and grease with solution of TSP, rinse, and allow to dry.
4. Remove stains caused by weathering or corroding metals with solution of sodium metasilicate applied after thoroughly wetting surface with potable water; allow to dry.

5. Wash and neutralize surfaces as recommended by coating manufacturer, rinse, and allow to dry.

F. Existing and New Plaster (or stucco) :

1. Allow surfaces to cure and dry completely prior to application of coatings; minimum of 28 days.
2. Remove dirt, efflorescence, scale, loose sand, and powder by wire brushing or by other approved methods.
3. Remove oil and grease with solution of TSP, rinse, and allow to dry.
4. Wash portland cement plaster to receive solvent reducible coatings with zinc sulfate solution, rinse, and allow to dry.
5. Wash gypsum plaster to receive solvent reducible coatings with acidic-detergent, rinse and allow to dry.
6. Fill hairline cracks, small holes and imperfections with latex patching plaster. Make smooth and flush with adjacent surfaces.

G. Steel - Uncoated:

1. Remove weld spatter by chipping or grinding.
2. Clean interior and weather protected steel in accordance with SSPC SP2 "Hand Tool Cleaning" and SP3 "Power Tool Cleaning". Clean areas of excessive corrosion or scale in accordance with SSPC SP7 "Brush-Off Blast Cleaning".
3. Clean exterior steel permanently exposed to elements in accordance with SSPC SP6 "Commercial Blast Cleaning".
4. Apply metal conditioner to bare surfaces in accordance with manufacturer's recommendations, paying particular attention to abrasions, welds, bolts, and nuts. Allow to set as recommended by solution manufacturer. Rinse with clean water with rust inhibitor mixed with water or applied immediately following rinse. Allow to dry.
5. Prime coat immediately.

H. Steel - Prime Coated:

1. Remove loose primer and rust to feather-edge at adjacent sound primer by cleaning in accordance with SSPC SP2 "Hand Tool Cleaning" and SP3 "Power Tool Cleaning".
2. Apply metal conditioner to abrasions, welds, bolts, and nuts in accordance with manufacturer's recommendations. Allow to set as recommended by manufacturer. Rinse with clean water with rust inhibitor mixed with water or applied immediately following rinse. Allow to dry.
3. Prime coat bare areas immediately.

I. Steel - Galvanized:

1. Remove white rust by cleaning in accordance with SSPC SP2 "Hand Tool Cleaning" and SP3 "Power Tool Cleaning". Exercise care not to remove galvanizing.
2. Pretreat surfaces to receive solvent reducible coatings immediately.

J. Wood - Opaque Finish:

1. Remove excess residue from knots, pitch streaks, cracks, open joints, and sappy spots. Remove or seal over grade stamp markings.
2. Sand wood surfaces and edges smooth. Remove dust after each sanding.
3. Apply compatible stain sealer to knots, pitch and resinous sapwood before applying prime coat. Do not apply shellac to exterior surfaces, or under latex or urethane finishes.
4. After primer is dry and before second coat, countersink nails and fill nail holes, cracks, open joints and other defects with putty or plastic wood filler.

K. Wood - Transparent Finish:

1. Remove excess residue from knots, pitch streaks, cracks, open joints, and sappy spots. Ensure exposed fasteners are countersunk.
2. Sand wood surfaces and edges smooth. Remove dust after each sanding.
3. After stain is dry and before sanding sealers are applied, fill nail holes, cracks, open joints and other defects with putty or plastic wood filler.
4. Tint fillers to match stain and finish coatings. Work fillers well into and perpendicular to grain before set. Wipe excess from surface.

3.04 SURFACE PREPARATION OF PREVIOUSLY COATED SURFACES

A. General:

1. Remove cracked and deteriorated sealants and calking.
2. Remove chalk deposits and loose, blistered, peeling, scaling, or crazed finish to bare base material or sound substrate by scraping and sanding.
3. Wash surfaces with solution of TSP to remove wax, oil, grease, and other foreign material; rinse, and allow to dry. Exercise caution that TSP solution does not soften existing coating.
4. Abrade glossy surfaces by sanding or wiping with liquid de-glosser.
5. Remove mildew as specified above.
6. Test compatibility of existing coatings by applying new coating to small, inconspicuous area. If new coatings lift or blister existing coatings, request recommendation from Architect.
7. Apply specified primer to surfaces scheduled to receive coatings.

B. Concrete, Masonry, and Portland Cement Plaster:

1. Fill cracks and voids with latex base filler.

2. Apply masonry conditioner to masonry surfaces in accordance with manufacturer's instructions.
3. Apply primer over bare surfaces and filler material.

C. Gypsum Wallboard and Gypsum Plaster:

1. Fill cracks and voids with spackling compound.
2. Apply primer over bare surfaces and newly applied texture coatings.

D. Metal:

1. Remove rust from surfaces to bare metal in accordance with SSPC SP6 "Commercial Blast Cleaning".
2. Exercise care not to remove galvanizing.
3. Complete preparation as specified for new work.

E. Wood:

1. Fill cracks, crevices and nail holes with putty or wood filler.
2. Apply primer over bare surfaces and filler material.

3.05 APPLICATION

A. General Requirements:

1. Coat all surfaces specified, scheduled, illustrated, and otherwise exposed unless specifically noted otherwise.
2. Apply coatings of type, color, and sheen as scheduled.
3. Use application materials, equipment, and techniques as recommended by coating manufacturer and best suited for substrate and type of material being applied.
4. Do not apply finishes to surfaces that are improperly prepared.
5. Number of coats specified are minimum number acceptable.
6. Apply coating systems to total dry film thickness scheduled. Apply material at not less than manufacturer's recommended spreading rate. Do not exceed maximum single coat thickness recommended by coating manufacturer. Do not double-back with spray equipment building up film thickness of two coats in one pass.
7. Ensure that edges, corners, crevices, welds, and exposed fasteners receive dry film thickness equivalent of flat surfaces.
8. Finish edges of coatings adjoining other materials or colors sharp and clean, without overlapping.

B. Prime Coats:

1. Apply initial coat to surfaces as soon as practical after preparation and before subsequent surface deterioration.

2. Backprime exterior woodwork with specified primer.
3. Backprime interior woodwork scheduled to receive transparent finish with gloss varnish reduced 25 percent with mineral spirits.
4. Apply primer to wood and metal sash before field glazing.

C. Intermediate and Top Coats:

1. Allow previously applied coat to dry before next coat is applied.
2. Sand and dust lightly between coats as recommended by coating manufacturer.
3. Apply each coat to achieve uniform finish, color, appearance, and coverage free of brush and roller marks, runs, misses, visible laps or shadows, hazing, bubbles, pin holes, or other defects.
4. If stains, undercoats, or other conditions show through final topcoat, correct defects and apply additional topcoats until coating film is of uniform finish, color, and appearance.

D. Finish Matching:

1. Finish closets same as adjoining rooms, unless otherwise specified.
2. Finish tops, bottoms, and edges of doors same as door faces. Apply sanding sealer to cut-outs. When faces are different colors, finish edges of doors to match space from which they are visible when door is in partly open position.
3. Finish other surfaces not specifically mentioned to match adjoining surfaces.

E. Mechanical and Electrical Items:

1. Refer to Division 21 – Fire Suppression, Division 22 – Plumbing, Division 23 - Heating, Ventilating, and Air Conditioning, and Division 26 - Electrical for schedule of color coding and identification banding of equipment, ductwork, piping, and conduit. Color code equipment, piping, conduit and exposed ductwork in accordance with requirements indicated.
2. Prior to finishing mechanical and electrical items, remove louvers, grilles, covers, and access panels and finish separately. Replace when dry.
3. Paint interior surfaces of ducts, and heating cabinets that are visible or reflective behind grilles and registers with one coat of flat black paint.
4. Finish dampers visible behind grilles and registers to match surface finish.
5. Paint both sides and edges of plywood equipment backboards before installing equipment.
6. Do not apply coatings over name plates, tags, or other equipment identification.

F. Reinstall trim, fittings, and other items removed for finishing.

3.06 FIELD QUALITY CONTROL

A. General: Comply with requirements of Section 01 40 00.

B. Periodically test film thickness of each coat with wet film gage to ensure coatings are being applied to proper thickness.

C. Request review of each applied coat by Architect before application of successive coats. Only reviewed coats will be considered in determining number of coats applied.

D. Immediately prior to Substantial Completion, perform detailed inspection of painted surfaces and repair or refinish abraded, stained, or otherwise disfigured surfaces.

E. Testing: Owner reserves right to employ independent testing agency to verify acceptability of substrates and conformance of coating materials to specified requirements; and to test coating quality and dry film thickness.

F. If test results show that material does not comply with specified requirements, remove noncomplying coatings, recoat with acceptable material, and pay costs of additional testing to ensure compliance.

3.07 CLEANING

A. Promptly remove spilled, splashed, or spattered coatings. Clean spots, oil, and other soiling from finished surfaces using cleaning agents and methods which will not damage materials.

B. If completed construction is damaged beyond normal cleaning or repair by painting operations, replace damaged items at no additional cost to Owner.

C. Maintain premises and storage areas free of unnecessary accumulation of tools, equipment, surplus materials, and debris.

D. Collect waste, cloths, and material which may constitute fire hazards and place in closed metal containers; remove from site daily along with empty containers.

3.08 PROTECTION

A. Protect finished work in accordance with Section 01 70 00.

B. Protect work of other trades against damage from coating activities. Correct damage by cleaning, repairing, replacing, and recoating as acceptable to Architect.

C. Provide "Wet Paint" signs and other methods to protect newly coated surfaces. Remove when directed or when no longer needed.

3.09 SCHEDULE - SHOP PRIMED ITEMS FOR SITE FINISHING

A. Exposed surfaces of lintels, Hollow metal frames units, and miscellaneous exposed steel construction.

3.10 SCHEDULE - EXTERIOR COATING SYSTEMS

A. Metal Surfaces:

1. Non-Ferrous Metals and Zinc-Coated (Galvanized) Steel

    a. System Latex Finish:
        Sheen: Semi-Gloss.
        Prime Coat: Galvanized Primer at 2.0 mils.
        Under Coat: Industrial Acrylic at 3.0 mils.
        Top Coat: Industrial Acrylic at 3.0 mils.
        System DFT: 8.0 mils.

2. Ferrous Metals – Uncoated:

    a. System Latex Finish:
        Sheen: Semi-Gloss.
        Prime Coat: Alkyd-Phenolic Primer at 2.5 mils.
        Under Coat: Industrial Acrylic at 2.5 mils.
        Top Coat: Industrial Acrylic at 2.5 mils.
        System DFT: 7.5 mils.

3. Ferrous Metals - Previously Coated:

    a. Coating System Latex Finish:
        Sheen: Semi-Gloss.
        Prime Coat: Touch-up existing with compatible primer.
        Under Coat: Industrial Acrylic at 2.5 mils.
        Top Coat: Industrial Acrylic at 2.5 mils.
        System DFT: 5.0 mils (excluding existing and touch-up primer).

3.11 SCHEDULE - INTERIOR COATING SYSTEMS

A. Concrete and Masonry Surfaces

1. Concrete Masonry Units:

    a. System Latex Finish:
        Sheen: Satin.
        Prime Coat: Interior Block Filler at 11.0 mils.
        Under Coat: Interior Latex Enamel at 1.5 mils.
        Top Coat: Interior Latex Enamel at 1.5 mils.
        System DFT: 3.0 mils (excluding primer).

    b. System Alkyd Finish:
        Sheen: Satin.
        Prime Coat: Interior Block Filler at 11.0 mils.
        Under Coat: Interior Alkyd Enamel at 1.7 mils.
        Top Coat: Interior Alkyd Enamel at 1.7 mils.
        System DFT: 3.4 mils (excluding primer).

2. Metal Surfaces:

    a. Non-Ferrous Metals and Zinc-Coated (Galvanized) Steel:

        1) System Latex Finish:
            Sheen: Satin.
            Prime Coat: Galvanized Primer at 2.0 mils.
            Under Coat: Interior Latex Enamel at 1.5 mils.

Top Coat: Interior Latex Enamel at 1.5 mils.
System DFT: 5.0 mils

b. Exposed Interior Structural Steel - Uncoated:

1) System Latex Finish:
Sheen: Satin.
Prime Coat: Waterbased Ferrous Metal Primer
Under Coat: Waterbased Polyurethane Acrylic at 1.5 mils.
Top Coat: Polyurethane Clear Coat at 1.5 mils.
System DFT: 5.0 mils.

c. Ferrous Metals - Uncoated:

1) System Latex Finish:
Sheen: Satin.
Prime Coat: Acrylic Latex Ferrous Metal Primer
Under Coat: Interior Latex Enamel at 1.5 mils.
Top Coat: Interior Latex Enamel at 1.5 mils.
System DFT: 6.0 mils.

d. Ferrous Metals - Previously Coated and intumescent fireproofing:

1) System Latex Finish:
Sheen: Satin.
Prime Coat: Acrylic Latex Ferrous Metal Primer
Under Coat: Interior Latex Enamel at 1.5 mils.
Top Coat: Interior Latex Enamel at 1.5 mils.
System DFT: 3.0 mils (excluding existing and touch-up primer).

3. Gypsum Surfaces:

a. Gypsum Board:

1) System Flat Latex Finish at ceilings:
Sheen: Flat
Prime Coat: Latex Primer at 1.0 mils.
Under Coat: Interior Latex Flat Paint at 1.4 mils.
Top Coat: Interior Latex Flat Paint at 1.4 mils.
System DFT: 3.8 mils.

2) System Latex Finish at Walls:
Sheen: Eggshell.
Prime Coat: Latex Primer at 1.0 mils.
Under Coat: Interior Latex Enamel at 1.4 mils.
Top Coat: Interior Latex Enamel at 1.4 mils.
System DFT: 3.8 mils.

3) System Water Based Epoxy at Toilet Rooms:
Sheen: Satin.
Prime Coat: Latex Primer at 1.0 mils.
Under Coat: Water Based Epoxy at 2.5 mils.
Top Coat: Water Based Epoxy 2.5 mils.
System DFT: 6 mils.

4. Wood Surfaces:

a. Painted Wood Panels and Trim:

1) System Opaque Latex Paint Finish:
Sheen: Semi-Gloss.
Prime Coat: Alkyd Enamel Undercoater at 2.0 mils.
Under Coat: Interior Latex Enamel at 1.5 mils.
Top Coat: Interior Latex Enamel at 1.5 mils.
System DFT: 5.0 mils.

3.12 PAINT COLORS

A. Exterior Surfaces: Selected by Architect - Verify.

B. Interior Surfaces: Selected by Architect - Verify.

END OF SECTION 09 90 00

SECTION 09 90 02
HIGH PERFORMANCE PAINTING AND COATING

PART 1 - GENERAL

1.01 SUMMARY

A. Section includes requirements for providing high performance painting and coating. Includes preparation, cleaning, protection, application and materials for areas that require high performance painting and coating systems, including, but not limited to,

B. Related Sections Include:

1. Division 1.
2. Division 3 – Concrete.
3. Division 5 – Metals.
4. Section 09 06 00 – Schedule for Finishes.
5. Section 09 90 00 – Painting and Coating.
6. Division 40 – Process Integration.
7. Division 41 – Material Processing and Handling.
8. Division 43 – Process Gas and Liquid Handling Equipment.
9. Division 46 – Water and Wastewater Process Equipment.

1.02 REFERENCES

A. The following is a list of standards which may be referenced in this section:

1. American Water Works Association (AWWA):
2. ANSI/ASTM D16 – Standard Terminology for Paint, Related Coatings, Materials, and Applications.
3. Environmental Protection Agency (EPA).
4. Occupational Safety and Health Act (OSHA).
5. Current Joint Standards for the Society for Protective Coatings (SSPC)/National Association of Corrosion Engineers International (NACE).
6. Ten States Standards – 54.5 Piping Code.

1.03 DEFINITIONS

A. Conform to ANSI/ATSM D16 for interpretation of terms used in this Section.

1.04 SUBMITTALS

A. Submit product data under provisions of Section 01 33 00. Indicate each material and cross-referenced specified coating, finish system, and application. Identify

each material by manufacturer's catalog number and general classification.

B. Provide Product data on all Products including manufacturer's technical information, label analysis, and instructions for handling, mixing, storing, and applying each coating material. Submit manufacturer's application instructions under provisions of Section 01 33 00.

C. Provide a paint system data sheet for each coating system, including all components for providing a complete system. Components include surface preparation, primer, intermediate coats, and finish coats.

D. Provide paint manufacturers certification that proposed coating systems meet specified performance requirements.

E. Submit five (5) full color sample sheets illustrating available colors for each scheduled surface finish Product. During the shop drawing review process, Engineer and Owner will select color choices for surfaces to be coated. Submit samples under provisions of Section 01 33 00.

F. If the manufacturer of finish coating differs from that of shop primer, provide finish coating manufacturer's written confirmation that materials are compatible for each instance.

G. Before proceeding with Work under this section, finish one complete space or item of each color scheme required showing selected colors, finish texture, materials, quality of work, and special details

1.05 QUALITY ASSURANCE

A. Product Manufacturer: Company specializing in manufacturing quality paints and finish products with minimum ten (10) years experience.

B. Applicator: Minimum 10 years' experience in application of specified products.

C. Regulatory Requirements:

1. Meet federal, state, and local requirements limiting the emission of volatile organic compounds.

2. Perform surface preparation and painting in accordance with recommendations of the following:

a. Paint manufacturer's instructions.
b. SSPC PA 3, Guide to Safety in Paint Applications.
c. Federal, state, and local agencies having jurisdiction.

D. Maintain examples of SSPC visual standards on Site.

E. Provide wet and dry paint thickness measurement instrument on Site.

F. Specification language for High Performance Coating Systems is based on Sherwin Williams and Tnemec.

1.06 DELIVERY, STORAGE, AND HANDLING

A. Delivered materials shall be stockpiled and stored at locations approved by the OWNER until required for installation. Materials shall be transported, delivered, stored and handled in accordance with manufacturer's instructions and the requirements of Section 01 61 00.

B. Protect shop painted surfaces during shipment and handling by suitable provisions including padding, blocking, and use of canvas or nylon slings.

C. Primed surfaces shall not be exposed to weather for more than 2 months before being topcoated, or less time if recommended by coating manufacturer.

D. Take precautionary measures to prevent fire hazards and spontaneous combustion. Removal all paint waste from site daily and dispose of properly.

1.07 REGULATORY REQUIREMENTS

A. Conform to applicable Montana Department of Public Health and Human Services, Montana Department of Environmental Quality, Environmental Protection Agency, Occupational Health and Safety Administration, Ten States Standards, Uniform Building Code, and Uniform Fire Codes and Standards.

B. All Products that may come into contact with water intended for use in a Public Water System shall meet American National Standards Institute (ANSI)/National Sanitation Foundation (NSF) International Standards 60 and 61, as appropriate. A Product will be considered as meeting these standards if so certified by NSF, the Underwriters Laboratories, or other organization accredited by ANSI to test and certify each Product.

1.08 THREE YEAR PERFORMANCE GUARANTEE

A. The quality of both materials and workmanship for the installed coating materials (as defined in this specification) will be the sole responsibility of the Contractor. It is hereby guaranteed that should the coating material delaminate, chip, peel, blister, crack or otherwise fail due to improper surface preparation, improper mixing and application or curing of coating materials or protection of the coating work during cure by the Contractor or due to lack of material quality on the part of the material manufacturer, the Contractor shall repair or replace the damaged or failing coating to Owner's satisfaction at no cost to Owner and at Owner's convenience. Should the existing substrate below the coating fail causing such coating failure, except if related to inadequate surface preparation or coating quality causing substrate corrosion, the Contractor shall not be held liable.

B. It is further understood by the Contractor that any incompatibility with or error in formulation of the coating materials used on this project, which results in a coating failure, will be a financial matter strictly between the Coating System Manufacturer and the Contractor. The business responsibility and financial accountability for such a material related failure to Owner would remain solely with the Contractor.

PART 2 - PRODUCTS

2.01 MANUFACTURERS

A. Mechanical Protective Coating Systems: All paint materials selected for coating systems for each type of system shall be the product of one manufacturer. Acceptable manufacturers are:

1. Tnemec
2. Sherwin-Williams (SW) Industrial Coating.

B. Coating systems of all manufacturers must be in accordance with the Contract Documents. Being named as a manufacturer does not eliminate their responsibility of providing coating systems in compliance with the following specification section. Any deviations without sufficient evidence proving equal or superior quality shall be rejected without further review or comment.

C. Provide manufacturer's best-quality paint material of the various coating types specified that are factory formulated and recommended by manufacturer for application indicated. Paint-material containers not displaying manufacturer's product identification will not be acceptable.

D. Proprietary Names: Use of manufacturer's proprietary product names to designate colors or materials is not intended to imply that products named are required to be used to the exclusion of equivalent products of other manufacturers. Furnish manufacturer's material data and certificates of performance for proposed substitutions and obtain approval from Engineer before bidding in accordance with Division 01.

2.02 ABRASIVE MATERIALS

A. Select abrasive type and size to produce surface profile that meets coating manufacturer's recommendations for specific primer and coating system to be applied.

2.03 PAINT MATERIALS

A. General:

1. Manufacturer's highest quality products suitable for intended service.
2. Compatibility: Only compatible materials from a single manufacturer shall be used in the Work. Particular attention shall be directed to compatibility of primers and finish coats.

2.04 MIXING

A. Multiple-Component Coatings:

1. Prepare using each component as packaged by paint manufacturer.
2. No partial batches will be permitted.
3. Do not use multiple-component coatings that have been mixed beyond their pot life.
4. Mix only components specified and furnished by paint manufacturer.

5. Do not intermix additional components for reasons of color or otherwise, even within the same generic type of coating.

B. Colors: Formulate paints with colorants free of lead, lead compounds, or other materials that might be affected by presence of hydrogen sulfide or other gas likely to be present at Site.

2.05 SHOP FINISHES

A. Shop Blast Cleaning: Reference Paragraph, Shop Coating Requirements.

B. Surface Preparation: Provide Engineer minimum 7 days' advance notice to start of shop surface preparation work and coating application work.

C. Shop Coating Requirements:

1. When required by equipment Specifications, such equipment shall be primed and finish coated in shop by manufacturer and touched up in field with identical material after installation.

2. Where manufacturer's standard coating is not suitable for intended service condition, Engineer may approve use of a tie-coat to be used between manufacturer's standard coating and specified field finish. In such cases, tie-coat shall be surface tolerant epoxy as recommended by manufacturer of specified field finish coat. Coordinate details of equipment manufacturer's standard coating with field coating manufacturer.

D. Pipe:

1. Ductile Iron Pipe:

a. Use SSPC standards as a guide for desired prepared surface.
b. Follow recommendations of pipe and coating manufacturers for means and methods to achieve SSPC-equivalent surface.
c. The surface preparation and application of the primer and finish coats shall be performed by pipe manufacturer.
d. For high performance (epoxy) coatings, follow additional recommendations of pipe and coating manufacturers.
e. Prior to blast cleaning, grind smooth surface imperfections, including, but not limited to delaminating metal or oxide layers.
f. For conventional (alkyd) coatings, clean asphalt varnish supplied on pipe and apply one full coat of a tar stop before two full coats of the color coats specified.

2.06 SPARES

A. Furnish small quantity kits (minimum one gallon per product per color) for touchup painting and for painting other small areas.

PART 3 - EXECUTION

3.01 GENERAL

A. Provide Engineer minimum 7 days' advance notice to start of field surface

preparation work and coating application work.

B. Perform the Work only in presence of Engineer, unless Engineer grants prior approval to perform the Work in Engineer's absence.

C. Environmental Requirements:

1. Do not apply paint in temperatures or moisture conditions outside of manufacturer's recommended maximum or minimum allowable.

2. Do not perform final abrasive blast cleaning whenever relative humidity exceeds 85 percent, or whenever surface temperature is less than 5 degrees F above dew point of ambient air.

D. Schedule inspection of cleaned surfaces and all coats prior to succeeding coat in advance with Engineer.

3.02 EXAMINATION

A. Factory Finished Items:

1. Review other Section in which primers are provided to ensure compatibility of the total system for various substrates

2. Schedule inspection with Engineer before repairing damaged factory finished items delivered to Site.

3. Test shop applied primer and finishes for compatibility with subsequent coating and covering materials.

4. Repair abraded or otherwise damaged areas on factory-finished items as recommended by coating manufacturer. Carefully blend repaired areas into original finish. If required to match colors, provide full finish coat in field.

B. Surface Preparation Verification: Inspect and provide substrate surfaces prepared in accordance with these Specifications and printed directions and recommendations of paint manufacturer whose product is to be applied. The more stringent requirements shall apply.

3.03 PROTECTION OF ITEMS NOT TO BE PAINTED

A. Remove, mask, or otherwise protect hardware, lighting fixtures, switchplates, aluminum surfaces, machined surfaces, couplings, shafts, bearings, nameplates on machinery, and other surfaces not specified elsewhere to be painted.

B. Provide drop cloths to prevent paint materials from falling on or marring adjacent surfaces.

C. Protect working parts of mechanical and electrical equipment from damage during surface preparation and painting process.

D. Mask openings in motors to prevent paint and other materials from entering.

E. Protect surfaces adjacent to or downwind of Work area from overspray.

3.04 SURFACE PREPARATION

A. Field Abrasive Blasting:

1. Perform blasting for items and equipment where specified and as required to restore damaged surfaces previously shop or field blasted and primed or coated.

2. Refer to coating systems for degree of abrasive blasting required.

3. Where the specified degree of surface preparation differs from manufacturer's recommendations, the more stringent shall apply.

B. Metal Surface Preparation:

1. Where indicated, meet requirements of SSPC Specifications summarized below:

   a. SP 1, Solvent Cleaning: Removal of visible oil, grease, soil, drawing and cutting compounds, and other soluble contaminants by cleaning with solvent.
   b. SP 2, Hand Tool Cleaning: Removal of loose rust, loose mill scale, loose paint, and other loose detrimental foreign matter, using nonpower hand tools.
   c. SP 3, Power Tool Cleaning: Removal of loose rust, loose mill scale, loose paint, and other loose detrimental foreign matter, sing power-assisted hand tools.
   d. SP 5, White Metal Blast Cleaning: Removal of visible oil, grease, dust, dirt, mill scale, rust, coatings, oxides, corrosion products, and other foreign matter by blast cleaning.
   e. SP 6, Commercial Blast Cleaning: Removal of all visible oil, grease, dust, dirt, mill scale, rust, coating, oxides, corrosion products and other foreign matter of at least 66⅔% of a sample unit area at least 3"x3" (9 in^2). Light shadows, slight streaks, or minor discolorations caused by stains of rust, mill scale, or previously applied coating in less than 33⅓% of the unit area is acceptable.
   f. SP 10, Near-White Blast Cleaning: Removal of visible oil, grease, dust, dirt, mill scale, rust, coatings, oxides, corrosion products, and other foreign matter, except for random staining limited to no more than 5 percent of each unit area of surface which may consist of light shadows, slight streaks, or minor discolorations caused by stains of rust, mill scale or previously applied coatings.

2. The words "solvent cleaning", "hand tool cleaning", "wire brushing", and "blast cleaning" or similar words of equal intent in these Specifications or in paint manufacturer's specification refer to the applicable SSPC specification.

3. Where OSHA or EPA regulations preclude standard abrasive blast cleaning, wet or vacu-blast methods may be required. Coating manufacturers' recommendations for wet blast additives and first coat application shall apply.

4. Ductile Iron Pipe Supplied with Asphaltic Varnish Finish: Remove asphaltic

varnish finish prior to performing specified surface preparation.

5. Hand tool clean areas that cannot be cleaned by power tool cleaning.
6. Round or chamfer sharp edges and grind smooth burrs, jagged edges, and surface defects.
7. Welds and Adjacent Areas:
    a. Prepare such that there is:
        i. No undercutting or reverse ridges on weld bead.
        ii. No weld spatter on or adjacent to weld or any area to be painted.
        iii. No sharp peaks or ridges along weld bead.
    b. Grind embedded pieces of electrode or wire flush with adjacent surface of weld bead.
8. Preblast Cleaning Requirements:
    a. Remove oil, grease, welding fluxes, and other surface contaminants prior to blast cleaning.
    b. Cleaning Methods: Steam, open flame, hot water, or cold water with appropriate detergent additives followed with clean water rinsing.
    c. Clean small isolated areas as above or solvent clean with suitable solvent and clean cloth.
9. Blast Cleaning Requirements:
    a. Type of Equipment and Speed of Travel: Design to obtain specified degree of cleanliness. Minimum surface preparation is as specified herein and takes precedence over coating manufacturer's recommendations.
    b. Select type and size of abrasive to produce surface profile that meets coating manufacturer's recommendations for particular primer to be used.
    c. Use only dry blast cleaning methods.
    d. Do not reuse abrasive, except for designed recyclable systems.
    e. Meet applicable federal, state, and local air pollution and environmental control regulations for blast cleaning, confined space entry (if required), and disposition of spent aggregate and debris.
10. Post-Blast Cleaning and Other Cleaning Requirements:
    a. Clean surfaces of dust and residual particles from cleaning operations by dry (no oil or water vapor) air blast cleaning or other method prior to painting. Vacuum clean enclosed areas and other areas where dust settling is a problem and wipe with a tack cloth.
    b. Paint surfaces the same day they are blasted. Reblast surfaces that have started to rust before they are painted.

C. Galvanized Metal, Copper, and Nonferrous Metal Alloy Surface Preparation:

1. Remove soil, cement spatter, and other surface dirt with appropriate hand or power tools.

2. Remove oil and grease by wiping or scrubbing surface with suitable solvent, rag, and brush. Use clean solvent and clean rag for final wiping to avoid contaminating surface.
3. Obtain and follow coating manufacturer's recommendations for additional preparation that may be required.

D. Concrete Surface Preparation:

1. Do not begin until 30 days after concrete has been placed.
2. Meet requirements of SSPC SP 13.
3. Voids and other defects that are at or near the surface shall be exposed during surface preparation.
4. Brush-off blast clean to remove loose concrete and laitance, and provide a tooth for binding. Upon approval by Engineer, surface may be cleaned by acid etching method. Approval is subject to producing desired profile as listed in section 3.07 below based on the required coating system. If not specifying, surface profile to the equivalent to No. 80 grit flint sandpaper. Acid etching of vertical or overhead surfaces shall not be allowed. Coordinate blast clean with buffing requirements provided in Division 03 – Concrete.
5. Remove grease, oil, dirt, salts or other chemicals, loose materials, or other foreign matter by solvent, detergent, or other suitable cleaning methods.
6. Secure coating manufacturer's recommendations for additional preparation, if required, for excessive bug holes exposed after blasting.
7. Unless otherwise required for proper adhesion, ensure surfaces are dry prior to painting.

E. Plastic and FRP Surface Preparation:

1. Hand sand plastic surfaces to be coated with medium grit sandpaper to provide tooth for coating system.
2. Large areas may be power sanded or brush-off blasted, provided sufficient controls are employed so surface is roughened without removing excess material.

F. Masonry Surface Preparation:

1. Complete and cure masonry construction for 14 days or more before starting surface preparation work.
2. Remove oil, grease, dirt, salts or other chemicals, loose materials, or other foreign matter by solvent, detergent washing, or other suitable cleaning methods.
3. Clean masonry surfaces of mortar and grout spillage and other surface deposits using one of the following:
    a. Nonmetallic fiber brushes and commercial muriatic acid followed by

rinsing with clean water.
b. Brush-off blasting.
c. Water blasting.

4. Do not damage masonry mortar joints or adjacent surfaces.
5. Leave surfaces clean and, unless otherwise required for proper adhesion, dry prior to painting.
6. Masonry Surfaces to be Painted: Uniform texture and free of surface imperfections that would impair intended finished appearance.
7. Masonry Surfaces to be Clear Coated: Free of discolorations and uniform in texture after cleaning.

G. Gypsum Board Surface Preparation: Typically, new gypsum board surfaces need no special preparation before painting.

1. Surface Finish: Dry, free of dust, dirt, powdery residue, grease, oil, or any other contaminants.

3.05 SURFACE CLEANING

A. Brush-off Blast Cleaning:

1. Equipment, procedure, and degree of cleaning shall meet requirements of SSPC SP 7.
2. Abrasive: Either wet or dry blasting sand, grit, or nutshell.
3. Select various surface preparation parameters, such as size and hardness of abrasive, nozzle size, air pressure, and nozzle distance from surface such that surface is cleaned without pitting, chipping, or other damage.
4. Verify parameter selection by blast cleaning a trial area that will not be exposed to view.
5. Engineer will review acceptable trial blast cleaned area and use area as a representative sample of surface preparation.
6. Repair or replace surface damaged by blast cleaning.

B. Acid Etching:

1. After precleaning, spread the following solution by brush or plastic sprinkling can: One part commercial muriatic acid reduced by two parts water by volume. Adding acid to water in these proportions gives an approximate 10 percent solution of HCl.
2. Application:

a. Rate: Approximately 2 gallons per 100 square feet.
b. Work acid solution into surface by hard-bristled brushes or brooms until complete wetting and coverage is obtained. c. Acid will react vigorously for a few minutes, during which time brushing shall be continued.
c. After bubbling subsides (10 minutes), hose down remaining slurry with

high pressure clean water.

d. Rinse immediately to avoid formation on the surface of salts that are difficult to remove.

e. Thoroughly rinse to remove any residual acid surface condition that may impair adhesion.

3. Ensure surface is completely dry before application of coating.

4. Apply acid etching to obtain a “grit sandpaper” surface profile. If not, repeat treatment.

C. Solvent Cleaning:

1. Consists of removal of foreign matter such as oil, grease, soil, drawing and cutting compounds, and any other surface contaminants by using solvents, emulsions, cleaning compounds, steam cleaning, or similar materials and methods that involve a solvent or cleaning action.

2. Meet requirements of SSPC SP 1.

3.06 APPLICATION

A. General:

1. In general, all new and modified existing structures and items, whether specifically mentioned or not, shall be painted, unless otherwise noted. Do not paint exterior concrete surfaces, unless specifically indicated.

a. Interior concrete walls, floors, and ceilings within the WRRF.

b. Interior concrete block masonry within the WRRF and modified concrete block masonry.

c. All new doors and frames and window frames (if required) within the expanded WRRF.

d. Exterior, interior, and submerged ferrous metals.

e. Miscellaneous other metals.

f. Paint shop-primed equipment and fixtures.

g. Unfinished louvers, grilles, covers, and access panels on mechanical and electrical components; paint separately.

h. Prime and paint all surfaces located behind, underneath, or otherwise previously obstructed by items that have been removed or demolished.

i. Prime and paint all surfaces of new process pipes (non-insulated and insulated), electrical conduit, valves, fittings, meters, boxes, hangers, brackets, collars, and supports, except where items are prefinished.

j. Paint discharge heads and base plates of all new or modified pumps.

k. Prime and paint all new unburied exterior steel, ductile, galvanized, or PVC piping.

l. Replace identification markings on mechanical or electrical equipment when painted accidentally.

m. Paint exposed conduit and electrical equipment occurring in finished areas.

n. Paint both sides and edges of plywood backboards for electrical

equipment before installing equipment.

o. Replace electrical plates, hardware, light fixture trim, and fittings removed prior to finishing.

p. All surfaces not specifically excluded

2. Extent of Coating (Immersion): Coatings shall be applied to internal vessel and pipe surfaces, nozzle bores, flange gasket sealing surfaces, carbon steel internals, and stainless steel internals, unless otherwise specified.

3. For coatings subject to immersion, obtain full cure for completed system. Consult coatings manufacturer's written instructions for these requirements. Do not immerse coating until completion of curing cycle.

4. Apply coatings in accordance with these Specifications and paint manufacturers' printed recommendations and special details. The more stringent requirements shall apply. Allow sufficient time between coats to assure thorough drying of previously applied paint.

5. Apply a stripe coat of an approved coating system via brush or roller to all weld seams, edges, angles, and mechanical connections. Stripe coat shall be applied after primer coat and be of a different color than the primer coat.

6. Vacuum clean surfaces free of loose particles. Use tack cloth just prior to applying next coat.

7. Coat units or surfaces to be bolted together or joined closely to structures or to one another prior to assembly or installation.

8. On pipelines, terminate coatings along pipe runs to 1 inch inside pipe penetrations.

9. Keep paint materials sealed when not in use.

10. Where more than one coat is applied within a given system, alternate colors to provide a visual reference showing required number of coats have been applied.

B. Galvanized Metal, Copper, and Nonferrous Metal Alloys:

1. Concealed galvanized, copper, and nonferrous metal alloy surfaces (behind building panels or walls) do not require painting, unless specifically indicated herein.

2. Prepare surface and apply primer in accordance with Protective Coating System specification.

3. Apply intermediate and finish coats of the coating system appropriate for the exposure.

C. Porous Surfaces, Such As Concrete and Masonry:

1. Filler/Surfacer: Use coating manufacturer's recommended product to fill air holes, bug holes, and other surface voids or defects.

2. Prime Coat: May be thinned to provide maximum penetration and adhesion.

a. Type and Amount of Thinning: Determined by paint manufacturer and dependent on surface density and type of coating.

3. Surface Specified to Receive Water Base Coating: Damp, but free of running water, just prior to application of coating.

D. Film Thickness and Coverage:

1. Number of Coats:

a. Minimum required without regard to coating thickness.
b. Additional coats may be required to obtain minimum required paint thickness, depending on method of application, differences in manufacturers' products, and atmospheric conditions.

2. Application Thickness:

a. Follow coating manufacturer's recommendations.
b. Measure using a wet film thickness gauge to ensure proper coating thickness during application.

3. Film Thickness Measurements and Electrical Inspection of Coated Surfaces:

a. Perform with properly calibrated instruments.
b. Recoat and repair as necessary for compliance with Specification.
c. Coats are subject to inspection by Engineer and coating manufacturer's representative.

4. Visually inspect concrete, masonry, nonferrous metal, plastic, and wood surfaces to ensure proper and complete coverage has been attained.

5. Give particular attention to edges, angles, flanges, and other similar areas, where insufficient film thicknesses are likely to be present, and ensure proper millage in these areas.

6. Apply additional coats as required to achieve complete hiding of underlying coats. Hiding shall be so complete that additional coats would not increase the hiding.

3.07 HIGH PERFORMANCE COATINGS SYSTEMS AND APPLICATION SCHEDULE

A. Refer to Section 09 06 00, Schedules for Finishes for specific surfaces to be coated in accordance with the following Systems 1 thru 14. Additional requirements are included in the Piping Schedule.

B. In the event of discrepancies or omissions in the following, defer to Section 09 06 00 and request clarification from Engineer before starting work in question.

C. System No. 1: Ferrous Metals, Exterior Exposure, Non immersion

System Type	Surface Preparation	Primer Coat 3.0 to 5.0 DFT	Intermediate Coat,	Topcoat, 2.0 to 3.0 DFT

Polyamidoamine	SSPC SP6	Tnemec Series N69, SW Macropoxy 646	NA	Tnemec Series 1075, SW Macropoxy 646

1. Use two coat coating system for maintenance coating of structural steel. For non-immersed, non-corrosive environments.
2. Use on new exposed metal surfaces, located outside of structures, including structural steel, metal decking, guard posts, hollow metal doors and frames, piping, equipment, and miscellaneous metal.

D. System No. 2: Ferrous Metals, Interior Exposure, Non-Immersion

System Type	Surface Preparation	Primer Coat, 3.09 90 02.0 to 5.0 DFT	Intermediate Coat	Topcoat, 3.0 to 5.0 DFT
Polyamidoamine	SSPC SP10	Tnemec Series N69, SW Duraplate 235 MPE	NA	Tnemec Series N69, SW Duraplate 235 MPE

1. For interior two coat coating system for coating of carbon steel and other ferrous metals. For non-immersed, mildly corrosive splash/spill and wet environments.
2. For exposed metal surfaces located inside of structures, exposed to weather or in a highly humid atmosphere, such as pipe galleries, and for the specific surfaces:
   a. Exterior surfaces of process pipes. All pipes scheduled to be insulated must be painted prior to providing insulation.
   b. Exterior surface of valves.
   c. Exterior surface of equipment not shop finished, per manufacturer's instructions.
   d. Pipe supports, excluding stainless and galvanized steel.

E. System No. 3: Ferrous Metals, Immersion

System Type	Surface Preparation	Primer Coat, 3.0 to 5.0 DFT	Intermediate Coat	Topcoat, 3.0 to 5.0 DFT
Polyamidoamine	SSPC SP10	Tnemec Series N69, SW Duraplate 235 MPE	NA	Tnemec Series N69, SW Duraplate 235 MPE

1. Verify with manufacturer a compatible field tie-in coat for shop primed items where applicable.
2. Use on immersed metal surfaces, metal surfaces above maximum liquid surface that are a part of immersed equipment, concrete embedded surfaces of metallic items, such as wall pipes, pipes, pipe sleeves, access manholes, gate guides and thimbles, structural steel, and interior surfaces of steel piping

noted in the Piping Schedule.

a. Submerged, partially submerged and splash area equipment not shop finished.

F. System No. 4: Ferrous Metals, Immersion and/or H2S Exposure

System Type	Surface Preparation	Primer Coat	Intermediate Coat	Topcoat
Moisture Cured Polyurethane	SSPC SP10	Tnemec Series 1 Omnithane (2.5 to 3.5 mils DFT), Or SW Equivalent	Tnemec Series 446 (8.0 to 10.0 mils DFT), Or SW Equivalent	Tnemec Series 446 (8.0 to 10.0 mils DFT), Or SW Equivalent
Reinforced Amine Epoxy	SSPC SP 10	SW Corothane 1-GalvaPac(3.0 to 4.0 mils DFT), Or Tnemec Equivalent	SW Sher-Glass FF (8.0 to 20.0 mils DFT), Or Tnemec Equivalent	SW Sher- Glass FF (8.0 to 20.0 mils DFT), Or Tnemec Equivalent

1. Use on immersed metal surface, metal surfaces above maximum liquid surface that are a part of immersed equipment, concrete embedded surfaces of metallic items, such as wall pipes, pipes, pipe sleeves, access manholes, gate guides and thimbles, and structural steel, and interior surfaces of steel piping noted in the Piping Schedule in areas with potential H2S exposure. These areas include:

   a. Surfaces as defined in the Project Drawings.

G. System No. 5: Metals, Buried and/or Below Grade

System Type	Surface Preparation	Primer Coat, 3.0 to 5.0 mils DFT	Intermediate Coat	Topcoat, 16.0 to 20.0 mil DFT
Coal tar epoxy	SSPC SP10	Tnemec Series N69 (optional), SW Macropoxy 646 (optional)	NA	Tnemec Series 46H- 413, SW Hi-Mil Sher-Tar Epoxy

1. For steel pipe and fittings, follow AWWA C209 and AWWA C214 with double outer wrap.

2. For buried, below grade portions of metal items, except buried stainless steel, and the follow specific surfaces:

   a. Fasteners and accessories for buried piping
   b. Buried Valves

H. System No. 6: Metals, Concrete Embedded and Encased

System Type	Surface Preparation	Primer Coat	Intermediate Coat, 8.0 to 10.0 mils DFT	Topcoat, 8.0 to 10.0 mils DFT
Coal tar epoxy	SSPC SP6	NA	Tnemec Series 46H-413, SW Hi-Mil Sher-Tar Epoxy	Tnemec Series 46H-413, SW Hi-Mil Sher-Tar Epoxy

1. For concrete embedded and encased surfaces of metallic items, such as wall pipes, pipes, pipe sleeves, access manholes, gate guides and thimbles.

I. System No. 7: Galvanized Metal, Copper, and Nonferrous Metal Alloy Conditioning:

System Type	Surface Preparation	Primer Coat, 3.0 to 5.0 mils DFT	Intermediate Coat	Topcoat, 3.0 to 5.0 mils DFT
Epoxy Polyamide	Abrasive brush blast to create a 1.5 mil profile	Tnemec Series N69, SW Macropoxy 646	NA	Tnemec Series N69, SW Macropoxy 646

1. Verify with manufacturer compatibility as a field tie-in coat.
2. Use on the following items or areas:
   a. Galvanized surfaces requiring painting.
   b. After application of System No. 7, apply System No. 1 topcoat for exterior, System No. 3 topcoat for interior.

J. System No. 8: PVC, CPVC and FRP, Exposed

System Type	Surface Preparation	Primer Coat, 2.0 to 4.0 mils DFT	Intermediate Coat	Topcoat, 2.0 to 4.0 mils DFT
Polyamidoamine	Scarify	Tnemec Series N69, SW Macropoxy 646	NA	Tnemec Series N69, SW Macropoxy 646

1. For use on exposed PVC, CPVC, and FRP.

K. System No. 9: Insulated Pipe, Exposed:

System Type	Surface Preparation	Primer Coat, 2.0 to 3.0 mils DFT	Intermediate Coat	Topcoat, 2.0 to 3.0 mils DFT
Acrylic	Clean and Dry	Tnemec Series 6, SW DTM primer/finish	NA	Tnemec Series 6, SW DTM primer/finish

1. For use on insulation of insulated pipes.

2. Coat pipes with appropriate coating system before insulating.

L. System No. 10: Concrete, Precast and Poured in Place, Immersion, Light H2S Vapor:

System Type	Surface Preparation	Primer Coat 3.0 to 5.0 mils DFT	Intermediate Coat	Topcoat, 3.0 to 5.0 mils DFT
Polyamidoamine	SSPC SP13, ICRI CSP2-3	Tnemec Series N69, SW Duraplate 235 MPE	NA	Tnemec Series N69, SW Duraplate 235 MPE

1. Prep surface in accordance with concrete surface preparation.
2. For use on walls and ceilings in areas with light to moderate H2S exposure.
3. Scheduled for:
   a. All precast concrete structures, including Runoff Lift Station, catch basins, sumps.

M. System No. 11: Concrete, Precast and Poured in Place, Immersion, High H2S

System Type	Surface Preparation	Primer Coat	Intermediate Coat	Topcoat
Fiber reinforced MP Epoxy	SSPC SP13, ICRI CSP4-6	Tnemec Series 218 MortarClad (60 to 65 mils DFT), SW Core- Cote FRE (60 to 120 mils DFT)	NA	Tnemec Series 436 (50 to 80 mils DFT), SW Core- Cote SC (15 to 20 mils DFT)

1. Prep surface in accordance with concrete surface preparation.
2. For use on walls and ceilings in areas with moderate to heavy H2S exposure.

N. System No. 12: Concrete, Precast and Poured in Place, Immersion

System Type	Surface Preparation	Primer Coat 3.0 to 5.0 mils DFT	Intermediate Coat	Topcoat, 3.0 to 5.0 mils DFT
Polyamidoamine	SSPC SP13 ICRI CSP2-4	Tnemec Series N69, SW Duraplate 235 MPE	NA	Tnemec Series N69, SW Duraplate 235 MPE

1. Prep surface in accordance with concrete surface preparation.
2. For use on floors, walls and ceilings in areas with no to minimal H2S exposure.

O. System No. 13, Concrete Secondary Containment, Chemical Resistant Paint

System Type	Surface Preparation	Primer Coat, Per Mnfr recommendation	Intermediate Coat Per Mnfr recommendation	Topcoat Per Mnfr recommendation
Epoxy	SSPC SP13 ICRI CSP5	Tnemec Series 218, SW Corobond 300 resurfacer	Tnemec Series 104, SW Sherglass FF	Tnemec Series 104 SW Sherglass FF

1. Prep surface in accordance with concrete surface preparation.
2. For use on floors and walls in secondary containment basins.

P. System No. 14 Aluminum and Dissimilar Metal Insulation:

System Type	Surface Preparation	Primer Coat	Intermediate Coat	Topcoat
Bituminous	Abrasive blast to provide a 3.0 mil angular anchor profile	NA	NA	Tnemec Series 46H- 413, SW Hi-Mil Sher-Tar Epoxy

1. Use on aluminum surfaces embedded or in contact with concrete and for dissimilar metal insulation.

3.08 COLORS

A. Provide as designated herein and shown in Piping Schedule or as selected by Engineer.

B. Proprietary identification of colors is for identification only. Selected manufacturer may supply matches.

C. Equipment Colors:

1. Equipment includes the machinery or vessel itself plus the structural supports and fasteners and attached electrical conduits.
2. Paint non-submerged portions of equipment the same color as the piping it serves, except as itemized below:
   a. Dangerous Parts of Equipment and Machinery: OSHA Orange.
   b. Fire Protection Equipment and Apparatus: OSHA Red.
   c. Radiation Hazards: OSHA Purple.
   d. Physical hazards in normal operating area and energy lockout devices, including, but not limited to, electrical disconnects for equipment and equipment isolation valves in air and liquid lines under pressure: OSHA Yellow.

D. Pipe Identification Painting:

1. Color code non-submerged metal piping, except electrical conduit. Paint

fittings and valves the same color as pipe, except equipment isolation valves.

2. Pipe Color Coding: In accordance with the "Recommended Standards For Wastewater Facilities" and as specified in Section 40 27 60 – Process Identification.

3. On exposed stainless steel piping, apply color 24 inches in length along pipe axis at connections to equipment, valves, or branch fittings, at wall boundaries, and at intervals along piping not greater than 9 feet on center.

4. Pipe Supports: Painted light gray, as approved by Engineer.

3.09 FIELD QUALITY CONTROL

E. Sharp edges, weld spatter, scab marks, and other imperfections shall be ground to a smooth radius or removed and re-blasted before coating application.

F. Testing:

1. Thickness and Continuity Testing:

a. Measure coating thickness specified in mils with a magnetic type, dry film thickness gauge, in accordance with SSPC PA 2. Check each coat for correct millage. Do not make measurement before a minimum of 8 hours after application of coating.

b. After repaired and recoated areas have dried sufficiently, retest each repaired area. Final tests may also be conducted by Engineer.

G. Inspection: Leave staging and lighting in place until Engineer has inspected surface or coating. Replace staging removed prior to approval by Engineer.

1. Provide additional staging and lighting as requested by Engineer.

H. Unsatisfactory Application:

1. If item has an improper finish color or insufficient film thickness, clean surface and topcoat with specified paint material to obtain specified color and coverage. Obtain specific surface preparation information from coating manufacturer.

2. Evidence of runs, bridges, holidays, laps, or other imperfections is cause for rejection.

3. Repair defects in accordance with written recommendations of coating manufacturer.

I. Damaged Coatings, Pinholes, and Holidays:

1. Feather edges and repair in accordance with recommendations of paint manufacturer.

2. Hand or power sand visible areas of chipped, peeled, or abraded paint, and feather the edges. Follow with primer and finish coat. Depending on extent of repair and appearance, a finish sanding and topcoat may be required.

3. Apply finish coats, including touchup and damage-repair coats in a manner

that will present a uniform texture and color-matched appearance.

3.10 MANUFACTURER'S SERVICES

J. In accordance with Section 01 40 00, Manufacturers' Field Services, coating manufacturer's representative shall be present at Site as follows:

1. On first day of application of any coating system.
2. A minimum of two additional Site inspection visits, each for a minimum of 4 hours, in order to provide Manufacturer's Certificate of Proper Installation.
3. As required to resolve field problems attributable to or associated with manufacturer's product.
4. To verify full cure of coating prior to coated surfaces being placed into immersion service.

3.11 CLEANUP

K. Upon completion of the Work, remove staging, scaffolding, and containers from Site or destroy in a legal manner.

L. Remove paint spots, oil, or stains upon adjacent surfaces and floors and leave entire job clean.

END OF SECTION 09 90 02

DIVISION 13

SPECIAL STRUCTURES

SECTION 13 34 21
PRE-FABRICATED CONTROL SHED

PART 1 - GENERAL

1.01 RELATED DOCUMENTS

A. Drawings and Special Provisions of the Contract, including General and Supplementary Conditions and Division 1 Specifications Sections, apply to this Section.

1.02 SUMMARY

A. This specification concerns the construction details for a pre-fabricated, stick-framed shed designed and constructed to be weather tight and easily installed. The building shall include the structural framing, roof and wall covering, trim and closures, and accessories herein described.

B. Related Sections include the following:

1. Division 1 Section 01 27 00 - Measurement and Payment

1.03 SUBMITTALS

A. The CONTRACTOR shall furnish the following:

1. Construction details showing; sidewall, endwall, and roof framing; floor joists and decking; covering and flashing details; door, window and wall penetration locations and accessory installation details to clearly indicate the proper assembly of all building parts.

PART 2 - PRODUCTS

2.01 DESCRIPTION

A. One stick-frame, clear span building with inside dimensions: 8'Wx10'Lx6'-8"H, and a roof slope of 4:12. Building shall be equipped with eves, one framed swing door, two 2'x2' slider windows, and metal roof.

B. Building shall be similar to the Sundance SR600 model manufactured by Tuff Shed: 72120 Manufacturing Rd, Thousand Palms, CA 92276. Telephone: (760) 607-6338. Tuff Shed is sold at Home Depot.

2.02 BUILDING DIMENSIONS

A. The building “Width and Length” measured from inside to inside face of the wall covering shall be 8 feet by 10 feet, respectively.

B. The building “Eave Height” shall be measured from the bottom of the base plate of the rigid frame columns to the intersection of lines representing the inside of the wall covering and the inside of the roof covering and shall measure 7 feet $\pm$ 0.1 foot.

C. The “Roof Slope” shall be the angle that the roof surface makes with the horizontal, expressed in the units of vertical rise to 12 units of horizontal run and shall be 4:12.

PART 3 - DESIGN

3.01 GENERAL

A. General design and construction features of the pre-fabricated Control Shed shall be as follows:

FEATURE	SPECIFICATION
Warranty	5-year
Floor Joist System	6" tall galvanized steel
Floor Decking	3/4" interlocking sturdi-floor premium OSB floor decking
Aluminum threshold at door	Included
Door Hardware	Patented 6" locking handle and 3 ultra heavy-duty hinges
Steel-Reinforced Door Size	4' x 6' placed on endwall
Interior Clear Sidewall Height	5' 8"
Wall Framing	2"x4" studs spaced 16" on-center
2"x4" Wall Top Plates	2 plates on sidewalls only
Siding Type	LP® SmartSide w/50-Year warranty
Trim Type	LP® SmartTrim w/50-Year warranty
Roof Decking	7/16" premium OSB roof decking
Rafters and Trusses	2 x 4 rafters joined w/ steel plates
Colored, Baked Enamel Drip Edge	Included on perimeter of roof
Roofing Felt Paper	15# felt included
Roofing	Concealed fastener, ribbed metal
Eave Type	4" block eave on sidewall
Roof pitch at peak	(4/12)

3.02 COLOR FINISH

A. Color of wall panels, and corner trim shall be Smoky Slate or other color specified by the OWNER upon review of submittal.

B. Color of metal roof panels shall be Forest Green or other color specified by the OWNER upon review of submittal.

C. The trim color shall be black or other color specified by the OWNER upon review of submittal.

D. The color surface shall be a silicon-polyester co-polymer resin type to give superior adhesion and durability. The coating shall be a D.F.T. of 1.0 mil thick (+ .1 mil).

The reverse or backer coat shall be a straight polyester with a D.F.T. of 0.5 mil thickness.

PART 4 - ACCESSORIES

4.01 WINDOWS

A. Horizontal slide windows shall be self-flashing, furnished with a sash lock, weather-stripping, and a half screen. The windows shall be factory glazed with double strength (DSB) glass.

PART 5 - BUILDING ANCHORAGE AND FOUNDATION

5.01 ANCHOR BOLTS

A. Anchor bolts shall resist 100% of the critical column reactions (shear and/or tension) expected. Anchor bolts supplied will be 36 KSI yield.

5.02 FOUNDATION

B. The building foundation shall be as shown on the plan drawings and as specified in Division 3 of these specifications. *Foundation layout by the Contractor shall include provisions for bolt embedment, length, hook, and any other associated items embedded in the concrete.*

END OF SECTION 13 34 21

SECTION 13 34 23
CONEX (CONTROL) BUILDING

PART 1 - GENERAL

1.01 SUMMARY

A. Section Includes:

1. Conex exterior Structure
2. Conex interior structure and finishes;

1.02 DEFINITIONS

A. Conex: Standard single-use "high-cube" steel shipping container – modified to serve as occupancy for workers and equipment.

1.03 ACTION SUBMITTALS

A. Product Data:

1. Conex structure;
2. Door/window framing
3. Interior framing, sheathing, trim, subfloor, flooring

B. Shop Drawings: Show fabrication of structural-steel components.

1.04 INFORMATIONAL SUBMITTALS

A. Mill test reports for structural-steel materials, including chemical and physical properties;

B. Certifications from the Conex manufacturer demonstrating compliance with AC462;

C. QA/QC analysis of the manufacturer's process – prepared by a reputable 3rd party inspection agency – provided that all critical manufacturing elements for the container and its additions/modifications are addressed.

1.05 QUALITY ASSURANCE

A. Fabricator Qualifications: A qualified manufacturer that fabricated the shipping container in accordance with the International Organization of Standardization (ISO) section 1496 Part 1 – General Cargo Containers;

B. The Conex container

C. Welding Qualifications: Qualify procedures and personnel in accordance with AWS D1.1/D1.1M. for all fabricated metal modifications to the Conex and sitework;

D. Insulation:

1. Insulation shall meet minimum requirements as outlined herein:

a. Floors shall have minimum R-Value of 24

b. Walls shall have a minimum R-Value of 14

c. Ceiling shall have a minimum R-Value of 21

d. Windows shall have a maximum fenestration U-Factor of 0.3

PART 2 - PRODUCTS

2.01 CONTAINER

A. 40' x 8' x 9'-6" one-trip “high-cube” shipping container, built to the standards of CIMC, Singamas, Maersk, CXIC, CEC or equal;

B. Fabricated in compliance with:

1. ISO 830 – Freight Containers Terminology;
2. ISO 668 – Series 1 Freight Containers – Classification/Dimensions;
3. ISO6346 – Freight Containers – Coding, Identification, Markings;
4. ISO 1161 – Series 1 Freight Containers – Corner castings specifications;
5. ISO 1496 Part 1; General Cargo Containers specifications and testing

2.02 CONEX MODULAR MANUFACTURE

A. The Conex shall be designed in accordance with local design parameters (live/dead loads, wind, snow, seismic), stamped by a Professional Engineer licensed in the State of Montana;

B. The Conex shall be constructed in accordance with applicable building codes (IBC/IRC) as adjusted for local regulations;

C. Improvements to the Container must be fabricated and follow QC guidelines for quality assurance in accordance with the American Institute of Steel Construction (AISC) 360 and;

D. Manufacturer’s fabrication and inspection practices shall be compliant with AC-462 and/or AC-786 criteria by the International Accreditation Service (IAS), and shall provide a current evaluation report from ICC-Evaluation Service stating such.

2.03 STRUCTURAL STEEL FRAMING MATERIALS

A. W-Shapes: ASTM A992/A992M.

B. Channels, Angles : ASTM A36/A36M (*door & window framing 2"x2"x⅛" HSS*).

C. Plate and Bar: ASTM A36/A36M.

D. Cold-Formed Hollow Structural Sections: ASTM A500/A500M, Grade C structural tubing.

E. Steel Pipe: ASTM A53/A53M, Type E or Type S, Grade B.

F. Welding Electrodes: Comply with AWS requirements.

2.04 BOLTS AND CONNECTORS

A. High-Strength A325 Bolts, Nuts, and Washers: ASTM F3125/F3125M, Grade A325, Type 1, heavy-hex steel structural bolts; ASTM A563, Grade DH, heavy-hex carbon-steel nuts; and ASTM F436/F436M, Type 1, hardened carbon-steel washers; all with plain finish.

B. Zinc-Coated High-Strength A325 Bolts, Nuts, and Washers: ASTM F3125/F3125M, Grade A325, Type 1, heavy-hex steel structural bolts; ASTM A563, Grade DH, heavy-hex carbon-steel nuts; and ASTM F436/F436M, Type 1, hardened carbon-steel washers.

1. Finish: Hot-dip zinc coating .

2. Direct-Tension Indicators: ASTM F959/F959M, Type 325-1, compressible-washer type with mechanically deposited zinc coating finish.

C. Shear Stud Connectors: ASTM A108, AISI C-1015 through C-1020, headed-stud type, cold-finished carbon steel; AWS D1.1/D1.1M, Type B.

2.05 DOORS

A. Doors & frames shall be pre-assembled for a rough opening of 36" x 80" with a door slab size 34¾" x 78⅛";

B. Door frame and end channels shall be powder coated 16-gauge kerfed steel (to hold/protect weather stripping) with kerf weatherstripping, properly reinforced for closer;

C. Door slab shall be powder coated 20-gauge steel with polystyrene foam core, prepped for deadbolt lock;

D. Door top cap shall be powder coated (grey) 20-gauge steel;

E. Door/frame assembly shall be equipped with tamper-resistant hinges, ASA strike plate, ADA compliant threshold, 10"x10" reinforced window opening and door sweep;

F. Steel door/frame assembly shall be a Bilson BT Modular door or equal

2.06 WINDOWS

A. Windows shall bear the following certifications:

1. Compliant with ANSI/AAMA/101/I.S.2

2. Insulated glass certified to ASTM E2188/E2190 per the Associated Laboratories Incorporated guidelines, Gold Label certified (with label attached);

3. NFRC certified with temporary U-factor and SHGC label;

B. Windows shall be:

1. Rated with a maximum fenestration U-Factor of 0.30 Btu/hr•ft^2•°F;

2. Integral color PVC compound containing impact-resistant solid plasticizer, titanium dioxide UV inhibitor and surface/color stabilizers;

3. Equipped with vinyl compression bulb seal weatherstripping;

4. Horizontal sliding type with roll-formed aluminum screens;

5. 3¼" minimum frame depth, multi-chambered vinyl profile;
6. 1¼" minimum sash depth, multi-chambered vinyl profile with vent stops located in fixed sash;
7. Equipped with cam lock and nylon rollers with stainless steel axles, extruded vinyl snap-on monorail roller track;
8. Manufactured with mitered, fusion-welded corners and joints;

C. Glazing shall be:
1. Low-E270/clear
2. Argon-filled;
3. Equipped with stainless steel spacers

D. Windows shall be Milgard V450 Series or approved equal

2.07 EMBEDS

A. Welded embedment plates (*for securing to foundation*): ¾"thick, 8"x8"ASTM F1554, Grade 36, plate with four ¾" diameter 6" long capped stud rods (ASTM A193 Grade B7) welded to embedded side of plate.

2.08 COATINGS

A. Comply with 09 90 00 "Painting and Coatings" and 09 90 02 "High Performance Painting and Coatings."

2.09 FABRICATION

A. Structural Steel: Fabricate and assemble in shop to greatest extent possible. Fabricate in accordance with ANSI/AISC 303 and to ANSI/AISC 360.

B. Shear Stud Connectors: Prepare steel surfaces as recommended by manufacturer of shear connectors. Weld using automatic end welding of headed-stud shear connectors in accordance with AWS D1.1/D1.1M and manufacturer's written instructions.

2.10 GALVANIZING

A. Hot-Dip Galvanized Finish: Apply zinc coating by the hot-dip process to structural steel in accordance with ASTM A123/A123M.

2.11 INTERIOR STRUCTURE & FINISHES

A. Spray Foam Insulation shall be closed cell, expanding polyurethane foam – heat and acoustic insulation – Owens-Corning, Johns Manville, Akfix, Stanley or equal;

B. Flooring shall be: 100% waterproof, scratch/skid/abrasion resistant; non-off-gassing, luxury vinyl plank – COREtec, Lifeproof or equal;

C. Ceiling finish shall be: $^{7}/_{16}$" thick interior-rated wood or faux-wood shiplap pattern planks or sheets – Armstrong or equal

D. Wall sheathing shall be either:
1. fire-retardant ¾" plywood, or;

2. B1 fire-rated, aluminum composite material (ACM) consisting of a polyethylene core, sandwiched between and bonded to two pre-painted sheets of aluminum for an overall minimum thickness of 3mm. Recommended manufacturer: Alumabond® or equal.

PART 3 - EXECUTION

3.01 EXAMINATION

A. Verify elevations of concrete or masonry bearing surfaces and locations of anchor rods, bearing plates, and other embedments for compliance with anchoring requirements;

B. Proceed with installation only after unsatisfactory conditions have been corrected.

3.02 PERMITTING

A. The Contractor shall secure a City Commercial Building Permit. The applicable portal is: *https://www.ci.missoula.mt.us/3129/Commercial-Building-Project*

B. The Contractor shall secure any other state/federal building permits as required

3.03 INSTALLATION

A. Set Conex accurately in locations and to elevations indicated in the approved drawings and in accordance with ANSI/AISC 303 and ANSI/AISC 360.

B. Baseplates and Bearing Plates: Clean concrete (or masonry) bearing surfaces of bond-reducing materials, and roughen surfaces prior to setting plates. Clean bottom surface of plates.

1. Set plates for structural members on wedges, shims, or setting nuts as required.

2. Weld plate washers to top of baseplate.

3. Snug-tighten anchor rods after supported members have been positioned and plumbed. Do not remove wedges or shims but, if protruding, cut off flush with edge of plate before packing with grout.

4. Promptly pack shrinkage-resistant grout solidly between bearing surfaces and plates, so no voids remain. Neatly finish exposed surfaces; protect grout and allow to cure. Comply with manufacturer's written installation instructions for grouting.

C. Maintain erection tolerances of structural steel within ANSI/AISC 303.

3.04 FIELD CONNECTIONS

A. High-Strength Bolts: Install high-strength bolts in accordance with RCSC's "Specification for Structural Joints Using High-Strength Bolts" for bolt and joint type specified.

1. Joint Type: Snug-tightened unless indicated otherwise in Drawings .

B. Weld Connections: Comply with AWS D1.1/D1.1M for tolerances, appearances, welding procedure specifications, weld quality, and methods used in correcting welding work.

1. Comply with ANSI/AISC 303 and ANSI/AISC 360 for bearing, alignment, adequacy of temporary connections, and removal of paint on surfaces adjacent to field welds.

3.05 FIELD QUALITY CONTROL

A. Special Inspections: Engage a special inspector to perform the following special inspections:

1. Verify structural-steel materials and inspect steel frame joint details.
2. Verify weld materials and inspect welds.
3. Verify connection materials and inspect high-strength bolted connections.

B. Testing Agency: Engage a qualified testing agency to perform tests and inspections.

1. Bolted Connections: Inspect and test bolted connections in accordance with RCSC's "Specification for Structural Joints Using High-Strength Bolts."
2. Welded Connections: Visually inspect field welds in accordance with AWS D1.1/D1.1M.

3.06 BUILDING ANCHORAGE AND FOUNDATION

A. Corner anchors shall be Twist Lock footing anchors manufactured by Container Twistlocks – sales@twistlocks.com.au, or equal - mounted to concrete piers as shown on the project drawings;

B. Anchor bolts (if utilized) shall resist 100% of the critical column reactions (shear and/or tension) expected. Anchor bolts supplied will be 36 KSI yield.

C. The building anchor piers shall be as shown on the plan drawings and as specified in Division 3 of these specifications. *Foundation layout by the Contractor shall include provisions for bolt embedment, twist-lock bolted plate or footing anchor dimensions, length, hook, and any other associated items embedded in the concrete*.

END OF SECTION 13 34 23

DIVISION 23

HVAC

SECTION 23 01 00
HVAC

PART 1 - GENERAL

1.01 DESCRIPTION

A. This section covers heating and ventilating systems for the Control Building, including:

1. split system heat pump;
2. exhaust fans;
3. combination louver/dampers;
4. electric heater

B. Electrical systems to support HVAC equipment are detailed in the Section 26 – Electrical.

1.02 SUBMITTALS

A. The following submittals for construction shall be made in accordance with the project submittal requirements as described in the Supplementary Conditions.

1. Manufacturer's catalog cuts and specification sheets.
2. Performance data for airflow and electrical draw.
3. Detailed dimensional drawings.
4. Installation instructions, including wiring diagrams.
5. Heating efficiencies and energy consumption.
6. Operation and maintenance manuals.

1.03 QUALITY ASSURANCE

A. Fan Performance ratings: Conform to AMCA standard 211 and 311. Fans must be tested in accordance with ANSI/AMCA Standard 210-99 and AMCA Standard 300-96 in an AMCA accredited laboratory. Fans shall be certified to bear the AMCA label for air performance seal.

B. Classification for Spark Resistant Construction shall conform to the intent of ANSI/AMCA Standard 99.

C. Each fan shall be given a balancing analysis which is applied to wheels at the outside radius. The maximum allowable static and dynamic imbalance is 0.05 ounces (Balance grade of G6.3)

D. Comply with the National Electrical Manufacturers Association (NEMA), standards for motors and electrical accessories

1.04 COORDINATION OF WORK

A. Heating and ventilation work shall be carefully coordinated with all other work to assure

proper support, clearance, electrical service, and final performance.

1.05 GENERAL REQUIREMENTS

A. Standard Products. Equipment furnished under this section shall be the standard product of the manufacturer. Where two or more units of the same class of equipment are required, they shall be the product of a single manufacturer; however, all the component parts of each system need not be the product of one manufacturer unless specified herein.

B. Accuracy of Data. The Drawings show the work contemplated, but the Contractor shall be solely responsible for making his own measurements and installing his work to fit the conditions encountered. Before beginning any work, the Contractor shall examine all Drawings and report to the Engineer any apparent discrepancies or interferences.

C. Metal Gauge. The gauge of sheet metal specified herein refers to U.S. Standard gauge and is the minimum permissible thickness.

D. All fans and HVAC units shall be statically and dynamically balanced by the manufacturer before shipment. Whenever possible, the balancing shall be done with the fan wheels mounted on the shaft on which they will operate. Fan shafts shall not pass through their first critical speed as the unit comes up to the rated rpm. Any fan or HVAC unit determined to be out of balance by the Engineer shall be field-balanced by a certified balancing contractor. Equipment vibration shall not exceed 3 mils peak-to-peak at bearings of equipment in the vertical, horizontal or axial directions.

E. Equipment Guards. All rotating equipment shall be provided with adequate guards which conform to OSHA requirements.

F. Lubrication and Tools. Equipment requiring lubrication prior to startup shall be lubricated. Any special tools required for the operation or adjustment of equipment shall be furnished.

G. UL Listing. All electrically operated ventilation equipment shall be UL listed.

1.06 QUALITY ASSURANCE

A. Governing Standards and Codes. All work covered by this section shall be performed in accordance with all applicable codes, laws, and regulations. In case of conflict between these Specifications and any code, law, or regulations, the latter shall govern. All work shall comply with UL safety requirements.

B. Materials and Equipment. All major items of mechanical equipment shall be of the best quality normally used for the purpose in good commercial practice and shall be the product of reputable manufacturers. Each major component of equipment shall have the manufacturer's name, address, and catalog number on a nameplate securely affixed in a conspicuous place. The nameplate of a distributing agent only will not be acceptable.

C. Prevention of Rust. Unless otherwise specified, all ferrous sheet metal surfaces other than ductwork shall be shop-painted using a rust-inhibiting treatment consisting of galvanizing or bonderizing, followed by a rust-inhibiting primer and finish paint. Field painting, if required, shall be in accordance with the painting section. Surface finish damaged during

installation shall be repaired in accordance with the painting section.

D. Operation and Maintenance Instructions. Copies of all instruction books, parts lists, and wiring diagrams covering all equipment items furnished shall be provided in accordance with the submittals section. The copies shall be bound and delivered.

PART 2 - MATERIALS

2.01 GENERAL

A. Refer to the HVAC Schedules in the Construction Drawings for specific manufacturer model numbers and capacities for all HVAC equipment required for the project. "Or equal" alternatives to manufacturers and models listed will be considered, subject to equivalency in performance, functionality and quality, and based on the requirements for Submittal review.

B. Dampers and wall-mounted fans shall be suitable for insertion in appropriately sized block-outs in the typical Conex finished building walls (see project drawings). Unit frames shall span full wall/insulation/skin/interior finish depth, or flashing matching frame material shall be installed to span the difference between the frame and wall depths.

C. Louver and damper performance data shall be licensed under the AMCA Certified Ratings Program and shall bear the AMCA Certified Ratings Seal. This certified performance data shall include airflow, pressure loss, and water penetration. Power ventilators shall be AMCA licensed for air and sound performance data.

2.02 COMBINATION LOUVER/DAMPERS *(Control Building)*

A. Combination louver/dampers shall be of parallel blade design - blades shall be completely symmetrical relative to their axle pivot point, presenting identical resistance to airflow and operation in either direction through the damper.

B. Louver frame shall be: extruded 6063-T5 aluminum alloy, 0.125" in thickness, with reinforced corners; 4" deep channel style,

C. Stationary front blades shall be drainable style located on approximately 4" centers and 45° angles with 0.081" extruded aluminum wall thickness.

D. Operable rear blades shall be extruded 6063-T5 aluminum alloy, center pivot style with 0.081" extruded aluminum wall thickness.

E. Jamb seals shall be compressible style stainless steel.

F. Blade seals shall be dual-durometer extruded vinyl style.

G. Blade linkage shall be out of airstream and concealed within frame.

H. Blade axles shall be 0.5" diagonal zinc plated steel of 0.375" minimum dimension, and positively locked into the damper blade.

I. Axle bearings shall be synthetic sleeve type. Finish of all materials shall be mill (none) unless specified from available options.

J. Blades shall be 0.081" thickness. Blade shafts shall be plated solid square steel Drive shafts shall extend 5" beyond jambs and shall be corrosion resistant/synthetic in extruded holes in the damper frame for maximum service.

K. Intake damper frames shall be jamb seals shall be flexible aluminum compression type to prevent leakage between blade end and damper frame.

L. Louver/dampers shall be supplied with standard mill finish.

M. Combination louver/dampers shall be provided with the manufacturer's optional insect screen. Screens shall be corrosion resistant, flat expanded metal.

N. Dampers shall be rated for pressures to 5.0" w.c., maximum velocities to 1,250 fpm, and temperatures to 180˚F. Testing and ratings shall be per AMCA Standard 500.

O. Combination louver/dampers shall include integral fixed louvers, with fixed blades of 0.081" minimum thickness. Fixed louver blades shall be set in a common from with the moveable damper.

P. Intake Louver/Dampers shall be *Greenheck EAC series*, or equal.

2.03 WALL MOUNTED EXHAUST FANS

(Control Building)

A. The fan shall be a low profile, wall mounted, spun aluminum, direct driven, centrifugal exhaust ventilator.

B. Standard Construction: The fan shall be of welded and bolted construction utilizing corrosion resistant fasteners.

C. The spun aluminum components shall be constructed of heavy-gauge aluminum, bolted to an aluminum support structure for rigidity and strength.

D. The aluminum motor cover shall have stainless steel fasteners to provide easy access into the motor compartment.

1. An integral watertight conduit chase shall be provided into the motor compartment to facilitate wiring connections.

2. The motor shall be isolated from the unit structure with heavy duty u-springs with rubber grommets to reduce vibration and sound.

3. The motor shall be enclosed in a weathertight compartment, separated from the exhaust airstream and cooled by air isolated from the exhaust.

E. Controls: exhaust fans shall be controlled manually and by the thermostat included as part of the exhaust fan package. The thermostats shall be set to operate the fans at temperatures at or above 85°F. The fan speed shall be controlled by a solid-state fan speed controller with infinite speed settings between positive "on" and "off" positions. The manual control switch shall be located near the entrance to allow activation prior to entering the room.

F. The fan shall include a standard disconnect switch

G. The fan shall bear a permanently attached engraved metal nameplate displaying model and serial number of unit for future identification.

H. Unit shall be factory run-tested after assembly.

I. Wheel: Wheel shall be non-overloading backward inclined centrifugal, constructed of heavy-gauge aluminum, including a precision machined cast aluminum or steel hub.

   1. Wheel inlet shall overlap an aerodynamic deep spun aluminum inlet cone to provide optimum air and sound performance.

   2. Wheel shall be statically and dynamically balanced in accordance with AMCA Standard 204-96, Balance Quality and Vibration Levels for Fans.

J. Motors and Electrical: Motor shall be heavy duty type with permanently lubricated sealed ball bearings and furnished at the specified voltage, phase and enclosure.

K. Options and Accessories: Solid State Speed Control

L. Fan shall be listed by Underwriters Laboratories (UL 705) when specified in the fan schedule. Fan shall bear the AMCA certified ratings seal for sound and air performance.

M. Warranty: Manufacturer's warranty shall apply for a period of 5 years (housing and wheel) and 1 year (motors).

N. Product: Fan shall be capable of exhausting a minimum of:

   1. 550 cfm at 0.2" WC static pressure for the Control Building MCC room and;

   2. 100 cfm at 0.2" WC static pressure for the Control Building office space.

O. Exhaust Fans to be *Greenheck Model CUE series* (or equal)

   1. Size 090 for the Control Building MCC room;

   2. Size 060 for the Control Building office space.

2.04 DUCTLESS HEAT PUMP

(Control Building)

A. Ductless mini split air conditioner 208/1/60 2.5 ton unit. The system shall consist of an indoor wall mounted unit and an outdoor pad mounted unit with liquid and gas line connecting the units. Unit shall be capable of cooling and heating.

B. System shall be rated for a 36,000 Btu/hr cooling capacity with a cooling input power of 4.3 kW with an airflow range of 470 to 770 cfm.

C. System shall be rated for a 38,000 Btu/hr heating capacity with a heating input power of 4.6 kW with an airflow range of 469 to 808 cfm.

D. Unit shall be supplied with R-410A refrigerant and capable of holding minimum 6 lbs.

E. Unit shall be capable of cooling between 0-115 degrees Fahrenheit and heating between -13-70 degrees Fahrenheit.

F. System shall have internal thermostat in the wall mounted unit.

G. Units shall be capable of being controlled by the building automation system with all applicable inputs and outputs needed.

H. The heat pump system shall be Daikin model FTXS36LVJU (indoor unit) and RKS36LVJU (outdoor unit) or approved collective equal

2.05 ELECTRIC HEATER *(For Curing Shed)*

A. Forced-air electric heater with heating element, blower, front panel controls and thermostat;

B. Equipped with three wattage settings with temperature limiting controls, minimum of: 17,065 Btu on high setting; 14,105 Btu on medium setting; 11,285 Btu on low setting;

C. Adjustable mounting angles for horizontal or vertical air flow with front-mounted vanes for precise airflow direction;

D. Protection against overheating with auto-shutoff feature;

E. Fully-enclosed, premium rated motor;

F. Commercial grade heating element;

G. The electric heater shall be a Dyna-Glo Model EG5000DGP or approved equal.

2.06 DUCTWORK *(only if specifically called for by HVAC subcontractor)*

A. Ductwork shall be sized and routed with appropriate adapters and transitions as necessary to fit nominal dimensions and penetrations as required. Duct routings shall be laid out to clear all existing obstacles, including those not shown on the Drawings. The Contractor shall provide transitions and adjustments to nominal duct dimensions shown shall be made as necessary to avoid spatial conflicts.

B. Ductwork shall be supported on adjacent wall and ceiling surfaces with steel straps and suitable fasteners. Steel straps shall be 12-gage, galvanized or stainless steel to match duct material being supported. Ductwork installation shall include adequate supports to provide a stable, secure finished installation.

PART 3 - EXECUTION

3.01 GENERAL

A. Installation of heating and ventilating equipment shall be performed by qualified and experienced workmen in strict conformance with the Drawings and approved manufacturer's installation submittals.

3.02 EQUIPMENT MOUNTING

A. Wall openings to install HVAC equipment in buildings shall be made as part of the Work. Openings shall be true and clean, taking care to maintain the integrity of interior and exterior surfaces, insulation, and framing members. Provide temporary closures during installation to prevent moisture, rodents, and insects from entering wall cavities.

B. Contractor shall provide mounting members, wall openings, and closures as necessary to adapt equipment to building walls and structures. Supplemental wood or metal structural support members shall be added as required for a secure and finished installation. No exposed insulation or openings to the core of building walls will be permitted in the finished installation; provide adequate closures as part of the Work.

C. Equipment mounting shall utilize the manufacturer's flanging or self-framing accessories where available.

D. Installations shall be completed to isolate vibration and prevent excessive noise.

3.03 WIRING AND CONTROLS

A. Wiring and controls for ventilation equipment shall be provided and installed as shown on the Drawings, and specified in Section 26, ELECTRICAL.

B. Ventilation equipment shall be wired on dedicated circuits, not in combination with lighting or other electrical equipment, unless specifically shown otherwise on the Drawings.

3.04 SYSTEM DEMONSTRATION

A. Once installation is complete, equipment and controls shall be demonstrated by the Contractor in the presence of the Engineer and the Owner. Any modifications or adjustments needed to equipment operation shall be made by the Contractor, following the demonstration, and the system(s) demonstrated once again.

END OF SECTION 23 01 00

SECTION 23 05 93
TESTING, ADJUSTING, AND BALANCING PROCESS AIR FLOW

PART 1 - GENERAL

1.01 SUMMARY

A. Section includes the testing, adjustment and balancing of process gas flow throughout the compost and biofilter aeration system

1.02 RELATED DOCUMENTS

A. Drawings and general provisions of the Contract, including General and Supplementary Conditions and Division 01 Specification Sections, apply to this Section.

1.03 SUMMARY

A. Section Include:

1. Balancing Air Systems:

a. Constant-volume air systems.

2. Testing, adjusting, and balancing existing systems and equipment.

1.04 DEFINITIONS

A. AABC: Associated Air Balance Council.

B. NEBB: National Environmental Balancing Bureau.

C. TAB: Testing, adjusting, and balancing.

D. TAB Specialist: An independent entity meeting qualifications to perform TAB work.

1.05 INFORMATION SUBMITTALS

A. Certified TAB reports.

B. Instrument

1. Instrument type and make.

2. Serial number.

3. Application.

4. Dates of use.

5. Dates of calibration.

1.06 QUALITY ASSURANCE

A. TAB Specialists Qualifications: Certified by AABC or NEBB.

1. TAB Field Supervisor: Employee of the TAB specialist and certified by AABC or NEBB.

2. TAB Technician: Employee of the TAB specialist and certified by AABC or NEBB

as a TAB technician.

B. Instrumentation Type, Quantity, Accuracy, and Calibration: Comply with requirements in ASHRAE 111, Section 4, “Instrumentation”.

1.07 FIELD CONDITIONS

A. Full Owner Occupancy: Owner will occupy the site and existing building during entire TAB period. Cooperate with Owner during TAB operations to minimize conflicts with Owner's operations.

PART 2 - PRODUCTS (NOT USED)

PART 3 - EXECUTION

3.01 EXAMINATION

A. Examine the Contract Documents to become familiar with Project requirements and to discover conditions in systems designs that may preclude proper TAB of systems and equipment.

B. Examine installed systems for balancing devices, such as test ports, gage cocks, thermometer wells, flow-control devices, balancing valves and fittings, and manual volume dampers. Verify that locations of these balancing devices are applicable for intended purpose and are accessible.

C. Examine the approved submittals for HVAC systems and equipment.

D. Examine equipment performance data including fan curves.

1. Relate performance data to Project conditions and requirements, including system effects that can create undesired or unpredicted conditions that cause reduced capacities in all or part of a system.

E. Examine HVAC equipment and verify that bearings are greased, belts are aligned and tight, filters are clean, and equipment with functioning controls is ready for operation.

F. Examine heat-transfer coils for clean and straight fins.

G. Report deficiencies discovered before and during performance of TAB procedures. Observe and record system reactions to changes in conditions. Record default set points if different from indicated values.

3.02 PREPARATION

A. Perform system-readiness checks of HVAC systems and equipment to verify system readiness for TAB work. Include, at a minimum, the following:

1. Airside:

a. Duct systems are complete with terminals installed.

b. Volume dampers are open and functional.

c. Clean filters are installed.

d. Fans are operating, free of vibration, and rotating in correct direction.

e. Automatic temperature-control systems are operational.

f. Ceilings are installed.

g. Windows and doors are installed.

h. Suitable access to balancing devices and equipment is provided.

3.03 GENERAL PROCEDURES FOR TESTING AND BALANCING

A. Perform testing and balancing procedures on each system according to the procedures contained in AABC's "National Standards for Total System Balance" or NEBB's "Procedural Standards for Testing, Adjusting, and Balancing of Environmental Systems" and in this Section.

B. Cut insulation, ducts, pipes, and equipment cabinets for installation of test probes to the minimum extent necessary for TAB procedures.

1. After testing and balancing, patch probe holes in ducts with same material and thickness as used to construct ducts.

2. After testing and balancing, install test ports and duct access doors.

C. Mark equipment and balancing devices, including damper-control positions and similar controls and devices, with paint or other suitable, permanent identification material to show final settings.

D. Take and report testing and balancing measurements in inch-pound (IP) units.

3.04 GENERAL PROCEDURES FOR BALANCING AIR SYSTEMS

A. Prepare test reports for both fans and outlets. Obtain manufacturer's outlet factors and recommended testing procedures. Cross-check the summation of required outlet volumes with required fan volumes.

B. Determine the best locations in main and branch ducts for accurate duct-airflow measurements.

C. Check airflow patterns from the outdoor-air louvers and dampers and the return- and exhaust-air dampers through the supply-fan discharge and mixing dampers.

D. Check dampers for proper position to achieve desired airflow path.

E. Check for airflow blockages.

F. Check condensate drains for proper connections and functioning.

G. Check for proper sealing of air-handling-unit components.

H. Verify that air duct system is sealed as specified in Section 233113 “Metal Ducts”.

3.05 PROCEDURES FOR CONSTANT-VOLUME AIR SYSTEMS

A. Adjust fans to deliver total indicated airflows within the maximum allowable fan speed listed by fan manufacturer.

1. Measure total airflow.
    a. Set outside-air dampers for proper position that simulates minimum outdoor-air conditions.
    b. Where duct conditions allow, measure airflow by main Pitot-tube traverse. If necessary, perform multiple Pitot-tube traverses, close to the fan and prior to any outlets, to obtain total airflow.
    c. Where duct conditions are not suitable for Pitot-tube traverse measurements, a coil traverse may be acceptable.
2. Measure fan static pressures as follows:
    a. Measure static pressure directly at the fan outlet or through the flexible connection.
    b. Measure static pressure directly at the fan inlet or through the flexible connection.
    c. Measure static pressure across each component that makes up the air-handling system.
    d. Report artificial loading of filters at the time static pressures are measured.
3. Do not make fan-speed adjustments that result in motor overload. Consult equipment manufacturers about fan-speed safety factors.

B. Adjust air inlets and outlets for each space to indicated airflows.
1. Set airflow patterns of adjustable outlets for proper distribution without drafts.
2. Measure inlets and outlets airflow.
3. Adjust each inlet and outlet for specified airflow.
4. Re-measure each inlet and outlet after they have been adjusted.

C. Verify final system conditions.
1. Re-measure and confirm that minimum outdoor airflows are within design. Readjust to design if necessary.
2. Re-measure and confirm that total airflow is within design.
3. Re-measure all final fan operating data, rpms, volts, amps, and static profile
4. Mark all final settings.
5. Measure and record all operating data.
6. Record final fan-performance data.

3.06 PROCEDURES FOR TESTING, ADJUSTING, AND BALANCING EXISTING SYSTEMS

A. Perform a preconstruction inspection of existing equipment that is to remain and be reused.

1. Measure and record the operating speed, airflow, and static pressure of each fan.
2. Measure motor voltage and amperage. Compare the values to motor nameplate information.
3. Check the refrigerant charge.
4. Check the condition of filters.
5. Check the condition of coils.
6. Check the operation of the drain pan and condensate-drain trap.
7. Check bearings and other lubricated parts for proper lubrication.
8. Report on the operating condition of the equipment and the results of the measurements taken. Report deficiencies.

B. Before

1. New filters are installed.
2. Coils are clean and fins combed.
3. Drain pans are clean.
4. Fans are clean.
5. Bearings and other parts are properly lubricated.
6. Deficiencies noted in the preconstruction report are corrected.

C. Perform testing and balancing of existing systems to the extent that existing systems are affected by the renovation work.

1. Compare the indicated airflow of the renovated work to the measured fan airflows, and determine the new fan speed and the face velocity of filters and coils.
2. Verify that the indicated airflows of the renovated work result in filter and coil face velocities and fan speeds that are within the acceptable limits defined by equipment manufacturer.
3. Balance each air outlet.

3.07 TOLERANCES

A. Set HVAC system's airflow rates and water flow rates within the following tolerances:

1. Supply, Return, and Exhaust Fans and Equipment with Fans: Plus or minus 10 percent.
2. Air Outlets and Inlets: Plus or minus 10 percent.

3.08 FINAL REPORT

A. General: Prepare a certified written report; tabulate and divide the report into separate sections for tested systems and balanced systems.

1. Include a certification sheet at the front of the report's binder, signed and sealed by

the certified testing and balancing engineer.

2. Include a list of instruments used for procedures, along with proof of calibration.
3. Certify validity and accuracy of field data.

B. General Report Data: In addition to form titles and entries, include the following data:

1. Title page.
2. Name and address of the TAB specialist.
3. Project name.
4. Project location.
5. Architect's name and address.
6. Engineer's name and address.
7. Contractor's name and address.
8. Report date.
9. Signature of TAB supervisor who certifies the report.
10. Table of Contents with the total number of pages defined for each section of the report. Number each page in the report.
11. Summary of contents including the following:
    a. Indicated versus final performance.
    b. Notable characteristics of systems.
    c. Description of system operation sequence if it varies from the Contract Documents.
12. Nomenclature sheets for each item of equipment.
13. Notes to explain why certain final data in the body of reports vary from indicated values.
14. Test conditions for fans and performance forms including the following:
    a. Conditions of filters.
    b. Cooling, coil, wet- and dry-bulb conditions.
    c. Other system operating conditions that affect performance.

C. Instrument Calibration Reports:

1. Report Data:
    a. Instrument type and make.
    b. Serial number.
    c. Application.

d. Dates of use.

e. Dates of calibration.

3.09 ADDITIONAL TESTS

A. Within 90 days of completing TAB, perform additional TAB to verify that balanced conditions are being maintained throughout and to correct unusual conditions.

END OF SECTION 23 05 93

SECTION 23 31 13
METAL DUCTS

PART 1 - GENERAL

1.01 RELATED DOCUMENTS

A. Drawings and general provisions of the Contract, including General and Supplementary Conditions and Division 01 Specification Sections, apply to this Section.

1.02 SUMMARY

A. Section Includes:

1. Single-wall round ducts and fittings.
2. Sheet metal materials.
3. Sealants and gaskets.
4. Hangers and supports.

1.03 DEFINITIONS

A. The following is a list of abbreviations which may be used in this section:

1. CFM: Cubic feet per minute
2. FPM: Feet per minute
3. MDFT: Mead dry film thickness
4. PCF: Pounds per cubic foot
5. ppm: Parts per million by volume
6. WC: Water column

B. Sealing Requirements:

1. For non-welded duct systems and components, the following definitions apply:
2. Joints, duct surface connections including:
3. Girth joints.
4. Branch and subbranch intersections.
5. Duct collar tap-ins.
6. Fitting subsections.
7. Louver and air terminal connections to ducts.
8. Access door, and access panel frames and jambs.
9. Duct, plenum, and casing abutments to building structures.
10. Seams: Joining of two longitudinally (in direction of airflow) oriented edges of duct

surface material occurring between two joints. All other duct surface connections made on perimeter are deemed to be joints.

1.04 ACTION SUBMITTALS

A. Ductwork Product Data:

1. Schedules of duct systems, materials, joints, sealing, gage and reinforcement, coatings.
2. SMACNA figure numbers for each shop fabricated item.
3. Reinforcing details and spacing.
4. Seam and joint construction details.
5. Hangers and supports, including methods for building attachment, vibration isolation, and duct attachment.

B. Ductwork Accessories Product Data:

1. Manufacturer's product data including catalog sheets, diagrams, standard schematic drawings, installation instructions and details, details of materials, construction, dimensions of individual components, and finishes, including the following items:
2. Fittings and volume control damper installation (both manual and automatic) details.
3. Gasket and sealing materials.
4. Test Ports for coated ducts.
5. Drains for ducts carrying mists or condensate.
6. Dampers: Include leakage, pressure drop, and maximum back pressure data.
7. Duct-mounted access panels and doors.
8. Flexible ducts.

C. Duct Fabrication Drawings:

1. Prepare after actual Job measurements are obtained.
2. Draw to a scale not smaller than 1/4 inch equals 1 foot, on drawing sheets same size as Contract Drawings.
3. Include the following features:
   a. Fabrication, assembly, and installation details including plans, elevations, sections, details of components, and attachments to other work.
   b. Ductwork layout, indicating pressure classifications, slopes, drain and test port locations, and sizes in plan view.
   c. For materials handling exhaust duct systems, indicate classification of materials handled.

d. Interface and relationship between coated ductwork and adjacent equipment.

e. Ductwork material and thickness.

f. Fittings and volume control damper installation (both manual and automatic) details.

g. Reinforcing details and spacing.

h. Seam and joint construction details.

i. Penetrations through fire-rated and other partitions.

j. Ductwork accessories and control devices such as automatic dampers, terminal units, smoke detectors, regulators, and air distribution devices.

k. Hangers and supports, including methods for building attachment, seismic bracing, vibration isolation, and ductwork attachment.

l. Coordination with ceiling suspension members.

m. Spatial coordination with other systems installed in same space with duct systems.

n. Coordination of ceiling-mounted and wall-mounted access doors and panels required for access to dampers and other operating devices.

o. Coordination with ceiling-mounted lighting fixtures, air outlets, and inlets.

p. Coordination of ductwork with sprinkler piping and other mechanical and electrical services, and equipment.

4. Hangers and support drawings and cut sheets, as required by Section 40 27 05, Process Piping Hangers & Supports and section 2.08 below.

5. Equipment anchorage and support drawings and cut sheets indicating size, material, spacing, embedment and edge distances of anchors and other relevant information. Provide drawings reflecting results of calculations specified below.

6. Provide duct, fitting, and coating performance data upon request.

1.05 INFORMATIONAL SUBMITTALS

A. Qualifications:

1. Manufacturer: List of references substantiating experience.

2. Installer: Manufacturer's certification that installer is qualified for installation work.

3. Nondestructive Testing Personnel: SNT-TC-1A, Level II certification and qualifications.

4. AWS QC1 Certified Welding Inspector: Submit evidence of current certification prior to commencement of welding activities.

5. Welders:

a. Continuity log for welders and welding operators.

b. Welder qualifications test records conducted by Contractor or manufacturer.

6. Welder certifications for sheet metal welders per AWS D9.1/D9.1M, Sheet Metal Welding Code.

7. Record Drawings: Include duct systems routing, fittings details, and installed accessories and devices.

1.06 QUALITY ASSURANCE

A. Industry Standards:

1. Unless otherwise indicated, provide supports and seismic restraint in compliance with SMACNA, Seismic Restraint Manual: Guidelines for Mechanical Systems. Use Seismic Hazard Level (SHL) C.

2. Unless otherwise indicated or specified, provide ductwork and supports constructed and installed in accordance with:

a. SMACNA HVAC Round Industrial Duct Construction Standards.

3. Comply with ASHRAE Fundamentals Handbook and ASHRAE HVAC Systems and Equipment Handbook recommendations, except as otherwise indicated.

4. Comply with NFPA 90A and NFPA 90B.

B. Manufacturers:

1. Factory Fabricated Ductwork: Firms regularly engaged in manufacture of ductwork products of types, materials, and sizes required, whose products have been satisfactorily used in service similar to that required for this Project for not less than 5 years.

C. Qualifications:

1. Installation Firm: 5 years' minimum experience of successful installation on ductwork systems similar to that required for this Project.

2. Changes or alterations to layout or configuration of duct system:

a. Specifically approved in writing by Engineer.

b. Provide designer's confirmation that proposed layout will provide original design results, without increasing system total pressure.

D. Delivery, Storage, and Handling:

1. Protect ductwork from dirt, water, and debris. During storage on Job Site, keep ends of ductwork covered to prevent foreign objects and water from entering ductwork.

2. Protect fabricated ductwork and fittings from damage during shipping, storage, and handling. Provide shrink-wrapped duct seal, applied to ends of ductwork and fittings to prevent end damage and prevent dirt and moisture from entering.

3. Separately package each piece of ductwork without internal nesting of ductwork or fitting pieces.

4. For non-flanged components, use either rigid plugs inside ends to prevent deflection or protect with wooden boxes.
5. Crate materials whenever practical prior to shipment.
6. Firmly fasten and pad components shipped to prevent shifting or flexing of components while in transit.
7. Inspect shipments upon delivery. Note damages and discrepancies on bill of lading and notify manufacturer within 24 hours.
8. Store coated ductwork on cardboard, Styrofoam, or similar material, out of traffic areas. Where possible, store ductwork indoors. Where necessary to store outdoors, store above grade and enclose with waterproof wrapping.
9. If ductwork coating is scratched, contact coating manufacturer for repair instructions. Repair or replace as determined by manufacturer.
10. Deliver sealant materials to Site in original unopened containers labeled with manufacturer, product name and designation, color, expiration period for use, pot life, curing time, and mixing instructions for multi-component materials.
11. Store and handle sealant materials in compliance with manufacturers' recommendations to prevent deterioration or damage as a result of moisture, high or low temperatures, contaminants, or other causes.
12. Deliver and store stainless steel sheets with mill-applied adhesive protective paper, maintained through fabrication and installation.

PART 2 - PRODUCTS

2.01 SCHEDULE

A. Ductwork Schedule: Refer to Duct Schedule herein.

2.02 GENERAL

1. Service Conditions:
    i. Materials suitable for outside environment containing foul air with H2S concentration exceeding 1 ppm.
    b. SMACNA Pressure Class: As indicated on the Drawings.
2. Provide components of this ductwork system, including facings, mastics, and adhesives, with a fire hazard rating not to exceed 25 for flame spread without evidence of continued progressive combustion, and 50 for smoke developed, tested in accordance with ASTM E84 and NFPA 255 methods.
3. Minimize number of joints in ductwork system.
4. Ductwork Interior Surfaces:
    a. Smooth. No sheet metal parts, tabs, angles, or other items may project into air ducts, unless otherwise specified.

b. Seams and Joints: External.

c. For ductwork that is required to be reinforced use only external reinforcing.

B. Supports, Anchorage, and Restraints:

1. When supports, anchorages, and seismic restraints for equipment and supports and seismic restraints for ductwork are not shown on Drawings, Contractor is responsible for their design.

2. Design seismic restraints to avoid introducing stresses in ductwork caused by thermal expansion or contraction.

3. Design connections to structural framing to avoid introducing twisting, torsion, or lateral bending in framing members. Provide supplementary steel as required.

4. Support Type: As indicated on Drawings.

5. Maximum Duct Deflection: ½ inch.

6. Support spacing as indicated on Drawings and the following maximum spacing: 15 feet, maximum.

2.03 PERFORMANCE REQUIREMENTS

A. Duct Dimensions: Unless otherwise indicated, all duct dimensions indicated on Drawings are inside clear dimensions and do not include insulation or duct wall thickness.

2.04 SINGLE-WALL ROUND DUCTS AND FITTINGS

A. General Fabrication Requirements: Comply with SMACNA's Round Industrial duct construction standards, based on indicated static-pressure class unless otherwise indicated.

1. Round Ducts: Spiral-lock, grooved, seam lock, or butt-welded seam construction.

2. Joints: Butt welded except provide Van Stone type connections to facility assembly and future maintenance. Designate proposed locations on Shop Drawings.

3. Elbows: Radius type, stamped, or multiple gore, minimum 1.5 radius to diameter ratio. Provide a minimum radius to diameter ratio of 2.0 or above for ducts with velocities above 2,000 feet per minute.

B. Transverse Joints: Select joint types and fabricate in accordance with SMACNA's “HVAC Duct Construction Standards - Metal and Flexible”, Figure 3-1, “Round Duct Transverse Joints”, for static-pressure class, applicable sealing requirements, materials involved, duct-support intervals, and other provisions in SMACNA's “HVAC Duct Construction Standards - Metal and Flexible”.

C. Longitudinal Seams: Select seam types and fabricate in accordance with SMACNA's “HVAC Duct Construction Standards - Metal and Flexible”, Figure 3-2, “Round Duct Longitudinal Seams”, for static-pressure class, applicable sealing requirements, materials involved, duct-support intervals, and other provisions in SMACNA's “HVAC Duct Construction Standards - Metal and Flexible”.

2.05 SHEET METAL MATERIALS

A. General Material Requirements: Comply with SMACNA's "Round Industrial Duct Construction" for acceptable materials, material thicknesses, and duct construction methods unless otherwise indicated. Sheet metal materials shall be free of pitting, seam marks, roller marks, stains, discolorations, and other imperfections.

B. Stainless Steel Ductwork:

1. Comply with ASTM A167, ASTM A176, ASTM A240/A240M, and ASTM A480/A480M.
2. Stainless Steel Sheet: Type 304 SST, 12-gauge.
3. Finish: No. 2 B (cold-rolled, bright) finish.
4. Exposed Ductwork: Where ductwork is indicated to be exposed, provide materials that are free from visual imperfections including pitting, seam marks, roller marks, oil canning, stain, discoloration, and other imperfections, including those that would impair painting.
5. Provide reinforcements of same material as ductwork.

2.06 FABRICATED DUCTWORK

A. Ductwork, Fittings, and Accessories: Construct and install in accordance with SMACNA Round Industrial or Rectangular Industrial duct construction standards, as applies, for pressure and system classification indicated.

B. Round Ducts:

1. Spiral-lock, grooved seam lock, or butt-welded seam construction.
2. Joints: Butt welded except provide Van Stone type connections to facilitate assembly and future maintenance. Designate proposed locations on Shop Drawings.
3. Elbows: Radius type, stamped or multiple gore, minimum 1.5 radius to diameter ratio. Mitered elbows not permitted.
4. Provide a minimum radius to diameter ratio of 2.0 or above for ducts with velocities above 2,000 feet per minute.
5. Provide gradual transitions and branches. Design ducts with velocities above 2,000 feet per minute for constant velocity.

C. Field-welded Ductwork Seams, Joints, and Stiffeners:

1. Welded by AWS certified welders.
2. Welds: Full penetration welds in accordance with SMACNA Managers Guide to Welding, and per AWS D9.1.

D. Reinforcement Shapes and Plates: Unless otherwise indicated, provide reinforcements of same material as ductwork.

2.07 SEALANT AND GASKETS

A. General: The term sealant used here is not limited to materials of adhesive or mastic nature, but also includes tapes and combinations of open weave fabric strips and mastics.

B. Adhesives, Cements, Sealants, and Installation Accessories as recommended by duct manufacturer for application.

C. Water-Based Joint and Seam Sealant:

1. Application Method: Brush on.
2. Solids Content: Minimum 65 percent.
3. Shore A Hardness: Minimum 20.
4. Water resistant.
5. Mold and mildew resistant.
6. VOC: Maximum 75 g/L (less water).
7. Maximum Static-Pressure Class: 10 inch wg, positive and negative.
8. Service: Indoor or outdoor.
9. Substrate: Compatible with stainless sheet steel.

2.08 HANGERS AND SUPPORTS

A. Supporting devices including, but not limited to, angles used for support and bracing, baseplates, rods, hangers, straps, screws, bolts shall be:

1. 304 Stainless Steel: complying with ASTM A240/A240M

B. Steel Cables for Galvanized-Steel Ducts: Galvanized steel complying with ASTM A603.

C. Steel Cable End Connections: Galvanized-steel assemblies with brackets, swivel, and bolts designed for duct hanger service; with an automatic-locking and clamping device.

D. Duct Attachments: Sheet metal screws, blind rivets, or self-tapping metal screws; compatible with duct materials.

E. Class 5 Duct Supports: Design to support accumulation of water in duct.

F. Construction Materials:

1. Supporting devices including, but not limited to, angles used for support and bracing, baseplates, rods, hangers, straps, screws, bolts shall be as follows:
2. Carbon steel, with an approved factory coating system applied after fabrication.
3. Type: 304 stainless steel.

G. Vibration Isolation:

1. Provide at each support location and where contact with ductwork is made.
2. Configure supports to allow for vibration isolation material thickness.
3. Material: Minimum 3/16 inch thickness EPDM-bonded to support structure. Do not bond material to ductwork.

2.09 EXPANSION JOINTS / FLEXIBLE CONNECTIONS

A. Provide where indicated on Drawings or as required for proper ductwork installation or thermal expansion.

B. Configuration:

1. Type: W design configuration with integral flanges suitable for service with duct.
2. Material: Hypalon.
3. Backing Rings: 3/8 inch thick, 2 inches wide, AISI Type 316 stainless steel.
4. Drilling Pattern: Match adjacent ductwork or equipment connection.
5. Length: 6 inches, flange-to-flange.
6. Extension: 2 inches.
7. Compression: 1/2 inch.
8. Lateral Offset: 1 inch.
9. Thickness: 1/4 inch, minimum.

C. Manufacturer and Product: Holz Rubber Company, Inc.; Style 945.

2.10 MANUAL DAMPERS

A. See Section 40 05 64 – Dampers for Corrosive Gas Service.

2.11 MISCELLANEOUS ACCESSORIES

A. General: Provide miscellaneous materials and products of types and sizes indicated and, where not otherwise indicated, provide type and size required to comply with ductwork system requirements, including proper connection of ductwork and equipment.

B. Nuts, Bolts, and Washers: AISI Type 316 stainless steel.

C. Structural Members: Matching type conforming to ASTM A666.

D. Provide nonmetallic pad between lower attachment and ductwork to achieve dielectric separation.

E. Gaskets:

1. Use on all flanged joints.
2. Gore-Tex Joint Sealant; W.L. Gore and Associates, Inc., Elkton, MD.
3. Description: Form in-place, fully expanded 100 percent PTFE gasket material, size as recommended by manufacturer.
4. Full-face, thickness as recommended by ductwork manufacturer.

F. Drains:

1. Provide at low points on SMACNA System Class 5 duct systems.
2. On factory-coated systems, attach drains prior to coating.

3. Weld couplings to bottom of main and branch ducts that are trapped and/or where shown on Drawings, to allow removal of condensed liquids.
4. Predetermine locations of ductwork drains prior to manufacturer's fabrication.

G. Sample and Test Ports:

1. Predetermine locations of pitot ports prior to manufacturer's fabrication. At minimum, provide pitot ports in each branch duct to equipment, in each major main duct, at each fan and scrubber inlet and outlet, and where shown on Drawings.
2. Materials of Construction: PVC, fluoropolymer or fluoropolymer coated stainless steel.
3. Bulkhead fittings with threaded cap configured to allow free passage of a Dwyer 160 series pitot tube.
4. Where possible locate ports in side of ductwork. Port location in bottom 90 degree arc of horizontal ductwork is prohibited.

H. Painted Identification Materials:

1. Stencils: Standard metal stencils, prepared for required applications with letter sizes generally comply with recommendations of ASME A13.1 for piping and similar applications, but not less than 1 1/4 inch-high letters for ductwork and not less than 3/4 inch-high letters for access door signs and similar operational instructions.
2. Stencil Paint: Standard exterior type stenciling enamel; black, except as otherwise indicated; either brushing grade or pressurized spray can form and grade.
3. Identification Paint: Standard identification enamel of colors indicated or in accordance with ASME A13.1 for colors for systems not identified herein.

PART 3 - EXECUTION

3.01 PREPARATION

A. Verify dimensions and conditions in field, coordinate support locations with layout and joints, and notify engineer of any changes required to the duct layout.

3.02 DUCT INSTALLATION

A. Drawing plans, schematics, and diagrams indicate general location and arrangement of duct system. Indicated duct locations, configurations, and arrangements were used to size ducts and calculate friction loss for air-handling equipment sizing and for other design considerations. Install duct systems as indicated unless deviations to layout are approved in writing.

B. Install ducts in accordance with SMACNA's "HVAC Duct Construction Standards - Metal and Flexible" unless otherwise indicated.

C. Install ducts in maximum practical lengths with fewest possible joints.

D. Install factory or shop-fabricated fittings for changes in direction, size, and shape and for

branch connections.

E. Unless otherwise indicated, install ducts vertically and horizontally, and parallel and perpendicular to building lines.

F. Install ducts close to walls, overhead construction, columns, and other structural and permanent enclosure elements of building.

G. Install ducts with a clearance of 1 inch, plus allowance for insulation thickness.

H. Install duct so that no load or movement in excess of that stipulated by equipment manufacturer will be imposed upon equipment connection; install to allow for contraction and expansion without stressing pipe, joints, or connected equipment.

I. Route ducts to avoid passing through transformer vaults and electrical equipment rooms and enclosures.

J. Where ducts pass through non-fire-rated interior partitions and exterior walls and are exposed to view, cover the opening between the partition and duct or duct insulation with sheet metal flanges of same metal thickness as the duct. Overlap openings on four sides by at least 1-1/2 inches.

K. Install dampers and all other duct-mounted accessories in air ducts where indicated on Drawings.

L. Protect duct interiors from moisture, construction debris and dust, and other foreign materials both before and after installation. Comply with SMACNA's “IAQ Guidelines for Occupied Buildings Under Construction”, Appendix G, “Duct Cleanliness for New Construction Guidelines”, Intermediate Cleanliness Level.

M. Provide drains with corrosion resistant drain plug on SMACNA System Class 5 duct systems and other where water or other liquids could accumulate.

N. Provide test ports at all branches suitable for system balancing.

O. Flanged Joints:

1. Provide flanges at each ducting connection to equipment to facilitate installation and removal.

2. Install perpendicular to duct centerline.

3. Bolt Holes: Straddle vertical centerlines aligned with connecting equipment flanges or as shown.

4. Use torque-limiting wrenches to ensure uniform bearing and proper bolt tightness.

5. Raised-Face Flanges: Use flat-face flange when joining with flat-faced ductile or cast-iron flange.

6. Verify compatibility of mating flange to adapter flange gasket prior to selecting adapter flanging.

7. Flange fillers are to be avoided, but if necessary, may be used to make up for small angles up to 6 degrees and for filling gaps up to 2 inches between flanges. Stacked

flange fillers shall not be used.

8. Threaded flanged joints shall be shop-fabricated and delivered to Site with flanges in-place and properly faced.
9. Manufacturer: Same as duct manufacturer for factory fabricated duct.

3.03 INSTALLATION OF EXPOSED DUCTWORK

A. Protect ducts exposed in finished spaces from being dented, scratched, or damaged.

B. Trim duct sealants flush with metal. Create a smooth and uniform exposed bead. Do not use two-part tape sealing system.

C. Maintain consistency, symmetry, and uniformity in arrangement and fabrication of fittings, hangers and supports, duct accessories, and air outlets.

D. Repair or replace damaged sections and finished work that does not comply with these requirements.

3.04 PROTECTION OF INSTALLED WORK

A. Cover open ends of installed ductwork systems to prevent dust, foreign objects, and water from entering ductwork.

B. Do not use ductwork systems for air conveyance until adequate air filtration devices are installed and prevent ingress of construction dirt.

3.05 DUCT SEALING

A. Seal ducts for duct static-pressure, seal classes, and leakage classes specified in “Duct Schedule” Article in accordance with SMACNA's “HVAC Duct Construction Standards - Metal and Flexible”.

B. Seal ducts at a minimum to the following seal classes in accordance with SMACNA's “HVAC Duct Construction Standards - Metal and Flexible”:

C. Seal all audible leaks.

3.06 HANGERS AND SUPPORT INSTALLATION

A. Comply with SMACNA's “HVAC Duct Construction Standards - Metal and Flexible”, Chapter 5, “Hangers and Supports”.

B. Building Attachments: Concrete inserts, powder-actuated fasteners, or structural-steel fasteners appropriate for construction materials to which hangers are being attached.

1. Install powder-actuated concrete fasteners after concrete is placed and completely cured.
2. Use powder-actuated concrete fasteners for standard-weight aggregate concretes or for slabs more than 4 inches thick.
3. Do not use powder-actuated concrete fasteners for lightweight-aggregate concretes or for slabs less than 4 inches thick.

C. Hanger Spacing: Comply with SMACNA's “HVAC Duct Construction Standards - Metal

and Flexible", Table 5-1, "Rectangular Duct Hangers Minimum Size", and Table 5-2, "Minimum Hanger Sizes for Round Duct", for maximum hanger spacing; install hangers and supports within 24 inchesof each elbow and within 48 inches of each branch intersection.

D. Hangers Exposed to View: Steel cables and end connections.

E. Install upper attachments to structures. Select and size upper attachments with pull-out, tension, and shear capacities appropriate for supported loads and building materials where used.

3.07 FIELD WELDING

A. Perform in accordance with SMACNA Industrial Standards. Provide full penetration welds on all seams and joints.

B. Weld Identification: Keep paper record of which welder welded each joint.

C. All welds shall conform to these standards:

1. SMACNA Managers Guide to Welding, 2nd Edition.
2. SMACNA RIDCS for pressure and system classification indicated.
3. AWS D9.1.

D. Surfaces:

1. Clean and free of paint, oil, rust, scale, slag, or other material detrimental to welding.
2. Clean stainless steel joints with stainless steel wire brushes or stainless steel wool prior to welding.
3. Do not use carbon steel cleaning tools on stainless or aluminum welds.
4. Thoroughly clean each layer of deposited weld metal, including final pass, prior to deposition of each additional layer of weld metal with a power-driven wire brush.

E. Alignment and Spacing:

1. Align ends to be joined within existing commercial tolerances on diameters, wall thicknesses, and out-of-roundness.
2. Root Opening of Joint: As stated in qualified welding procedure.
3. Minimum Spacing of Circumferential Butt Welds: 1 inch.

F. Climatic Conditions:

1. Do not perform welding if there is impingement of any rain, snow, sleet, or wind exceeding 5 mph on weld area, or if ambient temperature is below 32 degrees F.
2. Stainless Steel and Alloy Piping: If ambient is less than 32 degrees F, local preheating to a temperature warm to hand is required.

G. Tack Welds: Performed by qualified welder using same procedure as for completed weld, made with electrode similar or equivalent to electrode to be used for first weld pass, and

not defective. Remove those not meeting requirements prior to commencing welding procedures.

H. Surface Defects: Chip or grind out those affecting soundness of weld.

I. Weld Quality: Meet requirements of governing welding codes.

3.08 EXPANSION JOINTS / FLEXIBLE CONNECTIONS

A. Flexible Collars and Connections:

1. Provide at inlet and outlet of each fan.

2. Provide at each end of a road crossing.

3. Provide as necessary to accommodate thermal expansion.

4. Provide as indicated on Drawings.

B. Install such that flexible molded boot is not concave or otherwise twisted or deformed during normal operating conditions.

3.09 STARTUP

A. Air Balance: Comply with requirements in Section 23 05 93 “Testing, Adjusting, and Balancing for HVAC”.

3.10 MANUFACTURER’S SERVICES

A. Manufacturer’s Representative:

1. Present at Site or location designated by Owner, for minimum person-days listed below, travel time excluded:

a. 1 person-day for installation assistance, including pre-installation training of Contractor personnel in joint assembly and inspection.

b. 1 person-day for field testing and completion of Manufacturer’s Certificate of Proper Installation.

2. See Section 01 43 33, Manufacturers’ Field Services.

3.11 CLEANING

A. Clean ductwork of rust, dust, and debris, both internally and externally, before placing in operations.

B. Confirm that dampers are smooth, clean, and free of dirt when installed.

3.12 DUCT SCHEDULE

A. Fabricate above-ground foul air ducting with 304 stainless sheet steel of 12 gauge thickness except as otherwise indicated and as follows:

1. Fabricate all ducts to achieve SMACNA pressure class, seal class, and leakage class as indicated below.

2. Seal Class A

3. Leakage Class:

a. Quantity of Test Percent: 100%

b. Test Pressure: +10/-10 Inch of W.G.

c. Leakage Factor: 1% CFM/ 100SF

END OF SECTION 23 31 13

DIVISION 26

ELECTRICAL

SECTION 26 03 00
DEMOLITION/REMODEL

PART 1 - GENERAL

1.01 DESCRIPTION

A. This section describes general requirements and methods of execution relating to the demolition, reuse and restoration of portions of the electrical system for the Project. *This work is primarily related to removal of one 40hp blower and VFD from the existing Transitional Facility and reusing in the new curing facility.*

1.02 DEMOLITION/REMODEL WORK

A. The Contractor shall carefully examine the Drawings and Specifications, visit the project site, and make note of all existing conditions, dimensions, and limitations prior to Bid and make allowances thereto.

B. No Change Orders shall be issued due to the Contractor's lack of knowledge of the existing conditions of the Project and of the amount and difficulty of the remodel and/or demolition work necessary for a complete installation of the systems shown.

C. If existing active or nonactive services (which may not be shown on Plans) are encountered that require relocation or disconnecting, the Electrical Contractor shall make written request for decision on proper handling of the services. The Electrical Contractor shall not proceed with the Work until so authorized by the OWNER or Engineer.

D. When areas of the existing buildings are adjacent to the area of construction in which work is going on and are occupied, then this Contractor shall arrange the Work so as to reduce to a minimum the periods of interruption or outages in the various services.

E. Not less than one week before any system is to be put out of service, the Contractor shall notify and coordinate with other trades and the Owner of such necessity including the extent of the Work to be done during the outage, possible length of time required for that phase of the Work, and the desired time at which the outage is to begin.

F. Balance additional loads to existing circuitry between phases. Furnish a revised, typed panel directory on existing panelboards where circuitry is changed.

G. Carefully lay out all work in advance to minimize cutting, channeling, or drilling. Where necessary, all cutting and patching shall be done in a manner approved by the OWNER or Engineer. Do not endanger the stability of the structure. Restore any damaged surfaces to original conditions. Contractor at fault to assume all costs.

H. Remove or relocate existing conduits, wires, equipment, devices, or fixtures indicated on Drawings and as required by remodel operations. Where the reuse of existing conduits, wires, devices, or fixture is permitted, verify that wiring is continuous. Existing outlets or junction boxes shall not be rendered inaccessible by structural changes made to the building. Where existing walls are being furred out or refinished, extend existing outlets and devices to new surface as required.

I. Existing equipment which is indicated as being removed and not indicated for re-use shall be disposed of unless stated otherwise. Remove and dispose of any material, except fluorescent lamps and ballasts. Contractor shall be responsible for disposal of all removed lamps and ballasts. Ballasts may contain PCB's and shall be disposed of according to environmental regulations.

PART 2 - PRODUCTS & EXECUTION

2.01 EXISTING TRANSITIONAL FACILITY 40HP BLOWER

A. The south blower (40hp Twin City Fan Model 917-RBA) at the existing Transitional Facility shall be removed along with local disconnect and wiring, and re-utilized for the new curing facility;

B. The electrical feed wires between the Transitional Facility blower control shed and the south blower shall be removed and re-utilized if in re-usable condition in the opinion of the Engineer;

C. All remaining conduit left or appurtenant electrical devices left in the field shall be sealed.

2.02 EXISTING TRANSITIONAL FACILITY VARIABLE FREQUENCY DRIVE

A. The VFD controlling the south blower (Allen-Bradley PowerFlex 753) within the existing Transitional Facility blower control shed shall be de-energized, removed and re-utilized for the new curing facility;

B. All wiring, raceways, boxes, switches and disconnects for the south blower VFD shall be removed from the existing blower shed and any remaining conduit or appurtenant electrical devices left in the shed shall be sealed.

END OF SECTION 26 03 00

SECTION 26 05 00
COMMON WORK RESULTS FOR ELECTRICAL

PART 1 - GENERAL

1.01 RELATED DOCUMENTS

A. Drawings and general provisions of the Contract, including General Conditions and Division 01 Specification Sections, apply to this Section and all Division 26.

1.02 SUMMARY

A. Section Includes:

1. Electrical equipment coordination and installation.
2. Common electrical installation requirements.

1.03 QUALITY ASSURANCE

A. Comply with latest adopted IBC Codes, NFPA Codes, ANSI, UL, and applicable Local and State Codes. Also comply with Utility Company regulations, industry standards and Construction Documents.

B. Work shall be done by only trained, licensed and experienced workmen familiar with the requirements.

1.04 EXTENT OF DRAWINGS / SPECIFICATION

A. Drawings indicate intent and general layout of electrical systems for the Project. Drawings are partly diagrammatic and do not indicate all fittings and accessories which may be required. Provide such fittings and accessories as required to form a complete and operating system in general conformance with Specifications and Drawings.

1.05 PRIOR APPROVALS

A. All products submitted for prior approval shall be received by the Engineer 10 business days prior to Bid. Supply technical data, photometrics and dimensional Drawings showing that substitutes are equal to product specified. Faxed prior approvals will not be accepted.

1.06 DISCREPANCIES

A. Prior to submitting Bid, Contractor shall refer any apparent discrepancies or omissions to Engineer for clarification. The more stringent provisions shall take precedence where codes, Specifications and Drawings differ with one another. The Contractor shall Bid the more expensive requirement, unless discrepancy is addressed by Addendum prior to Bid.

1.07 SHOP DRAWING SUBMITTALS

A. Provide pdf copy of all product data.

1.08 SEQUENCING AND SCHEDULING

A. Coordinate connecting electrical systems with exterior underground and overhead utilities and services. Comply with requirements of governing regulations, franchised service companies, and controlling agencies.

1.09 RECORD DOCUMENTS

A. Prepare Record Documents in accordance with the requirements in Division 1 Section "PROJECT CLOSEOUT." In addition to the requirements specified in Division 1, indicate the following installed conditions:

1. Actual location of all electrical service gear/feeders, all major underground or underslab conduits, all conduit stubs for future use, any change in branch circuitry from Drawings.

2. Addendum items, Change Order items and all changes made to Drawings from Bidding phase through to Project completion.

3. Actual equipment and materials installed. Where manufacturer and catalog number are indicated on Drawings, generally or in fixture or equipment schedules, change to reflect actual products installed.

4. Change service panel and branch panel breaker locations and schedules to reflect actual installed conditions.

1.10 MAINTENANCE MANUALS

A. Prepare maintenance manuals as follows:

1. Compile Operating and Maintenance Manuals for the electrical systems and equipment. The manuals shall be provided to the Architect for approval complete and at one time, prior to requesting final payment. Partial or separate data will be returned for completion.

2. Manuals shall be in pdf format

3. Tabs shall be labeled and arranged as follows:

a. Index: Furnish under the first tab an index of Sections listing name of Section and Specification numbers.

b. Equipment Manufacturers: Furnish under the second tab a complete typed list of equipment suppliers and manufacturers representative including type of equipment, name, address and phone number. The company listed here should be the one which could furnish replacement parts and offer technical information about the equipment.

c. Product Literature: Each tab, starting with the third shall contain the name of a Specification Section. Behind each tab shall be the previously submitted and approved Shop Drawing, factory published operation and maintenance instructions and parts lists. Also include description of function, normal operating characteristics and limitations, engineering data and tests, and complete nomenclature and commercial numbers of replacement parts. Manufacturer's printed operating procedures to include start-up, break-in, and

routine and normal operating instructions; regulation, control, stopping, shutdown, and emergency instructions; and summer and winter operating instructions. Maintenance procedures for routine preventative maintenance and troubleshooting; disassembly, repair, and reassembly; aligning and adjusting instructions. Servicing instructions and lubrication charts and schedules.

PART 2 - PRODUCTS (Not Applicable)

PART 3 - EXECUTION (Not Applicable)

END OF SECTION 26 05 00

SECTION 26 05 19
LOW-VOLTAGE ELECTRICAL POWER CONDUCTORS AND CABLES

PART 1 - GENERAL

1.01 RELATED DOCUMENTS

A. Drawings and general provisions of the Contract, including General and Supplementary Conditions and Division 01 Specification Sections, apply to this Section.

1.02 SUMMARY

A. This Section includes the following:

1. Wires and cables rated 600 V and less.

2. Connectors, splices, and terminations rated 600 V and less.

1.03 DEFINITIONS

A. EPDM: Ethylene-propylene-diene terpolymer rubber.

B. NBR: Acrylonitrile-butadiene rubber.

1.04 SUBMITTALS

A. Product Data: For each type of product indicated.

B. Field quality-control test reports.

1.05 QUALITY ASSURANCE

A. Electrical Components, Devices, and Accessories: Listed and labeled as defined in NFPA 70, Article 100, by a testing agency acceptable to authorities having jurisdiction, and marked for intended use.

B. Comply with NFPA 70.

PART 2 - PRODUCTS

2.01 CONDUCTORS AND CABLES

A. Feeders: Copper THHN-THWN. Solid for No. 10 AWG and smaller; stranded for No. 8 AWG and larger.

B. Branch Circuits: Copper THHN-THWN. Solid for No. 10 AWG and smaller; stranded for No. 8 AWG and larger.

C. VFD Motor Cable: Shieled multiconductor w/ground, XHHW-2, XLPE 600V

D. Instrumentation Cable: See cable schedule on plans.

E. Fiber Optic and Cat6 Cable: See Division 27.

2.02 CONNECTORS AND SPLICES

A. Description: Factory-fabricated connectors and splices of size, ampacity rating, material, type, and class for application and service indicated.

PART 3 - EXECUTION

3.01 INSTALLATION OF CONDUCTORS AND CABLES

A. Use manufacturer-approved pulling compound or lubricant where necessary; compound used must not deteriorate conductor or insulation. Do not exceed manufacturer's recommended maximum pulling tensions and sidewall pressure values.

B. Use pulling means, including fish tape, cable, rope, and basket-weave wire/cable grips, that will not damage cables or raceway.

C. Install exposed cables parallel and perpendicular to surfaces of exposed structural members, and follow surface contours where possible.

D. Install all wire in raceway; minimum size shall be #12 AWG.

E. Shared neutral conductors are not allowed.

3.02 CONNECTIONS

A. Tighten electrical connectors and terminals according to manufacturer's published torque-tightening values. If manufacturer's torque values are not indicated, use those specified in UL 486A and UL 486B.

B. Make splices and taps that are compatible with conductor material and that possess equivalent or better mechanical strength and insulation ratings than unspliced conductors.

1. Use oxide inhibitor in each splice and tap conductor for aluminum conductors.

3.03 COLOR CODING FOR PHASE IDENTIFICATION

A. Color code secondary feeder and branch circuit conductors with factory applied color as follows:

120/240 Volts	Phase
Black	A
Red	B

White	N
Green	G
277/480 Volts	Phase
Brown	A
Orange	B
Yellow	C
Gray	N
Green	G

3.04 FIELD QUALITY CONTROL

A. Prior to energizing, test wires and cables for electrical continuity and for short-circuits.

END OF SECTION 26 05 19

SECTION 26 05 26
GROUNDING AND BONDING FOR ELECTRICAL SYSTEMS

PART 1 - GENERAL

1.01 REALTED DOCUMENTS

A. Drawings and general provisions of the Contract, including General Conditions and Division 01 Specification Sections, apply to this Section.

1.02 SUMMARY

A. This Section includes methods and materials for grounding systems and equipment.

1.03 QUALITY ASSURANCE

A. Electrical Components, Devices, and Accessories: Listed and labeled as defined in NFPA 70, Article 100, by a testing agency acceptable to authorities having jurisdiction, and marked for intended use.

B. Comply with UL 467 for grounding and bonding materials and equipment.

PART 2 - PRODUCTS

2.01 CONDUCTORS

A. Insulated Conductors: Copper wire or cable insulated for 600 V unless otherwise required by applicable Code or authorities having jurisdiction.

2.02 CONNECTORS

A. Listed and labeled by a nationally recognized testing laboratory acceptable to authorities having jurisdiction for applications in which used, and for specific types, sizes, and combinations of conductors and other items connected.

2.03 GROUNDING ELECTRODES

A. Ground Rods: Copper-clad steel, sectional type; 3/4 inch in diameter by 8 feet long.

PART 3 - EXECUTION

3.01 EQUIPMENT GROUNDING

A. Install insulated equipment grounding conductors with all feeders and branch circuits.

B. Provide electrical control room/container grounding (NEC structure ground) consisting of (2) driven rods with #4 CU interconnecting cable and a UFER ground consisting of

20ft of #4 bare CU cable in concrete footing. Do not bond N/G inside the MDP. Service ground with N/G bond occurs at the existing service switchboard.

C. Bond all motor frames with equipment grounding conductor.

END OF SECTION 26 05 26

SECTION 26 05 33
RACEWAY AND BOXES FOR ELECTRICAL SYSTEMS

PART 1 - GENERAL

1.01 RELATED DOCUMENTS

A. Drawings and general provisions of the Contract, including General Conditions and Division 01 Specification Sections, apply to this Section.

1.02 SUMMARY

A. This Section includes raceways, fittings, boxes, enclosures, and cabinets for electrical wiring.

1.03 DEFINITIONS

A. EMT: Electrical metallic tubing.

B. ENT: Electrical nonmetallic tubing.

C. EPDM: Ethylene-propylene-diene terpolymer rubber.

D. FMC: Flexible metal conduit.

E. IMC: Intermediate metal conduit.

F. LFMC: Liquidtight flexible metal conduit.

G. LFNC: Liquidtight flexible nonmetallic conduit.

H. RNC: Rigid nonmetallic conduit.

1.04 SUBMITTALS

A. Product Data: For raceways, fittings, hinged-cover enclosures, and cabinets.

1.05 QUALITY ASSURANCE

A. Electrical Components, Devices, and Accessories: Listed and labeled as defined in NFPA 70, Article 100, by a testing agency acceptable to authorities having jurisdiction, and marked for intended use.

B. Comply with NFPA 70.

PART 2 - PRODUCTS

2.01 METAL CONDUIT AND TUBING

A. Rigid Steel Conduit: ANSI C80.1.

B. EMT: ANSI C80.3.

C. Fittings for Conduit and Cable: NEMA FB 1; listed for type and size raceway with which used, and for application and environment in which installed.

1. Fittings for EMT: Steel, set-screw type.

D. Joint Compound for Rigid Steel Conduit: Listed for use in cable connector assemblies, and compounded for use to lubricate and protect threaded raceway joints from corrosion and enhance their conductivity.

2.02 NONMETALLIC CONDUIT AND TUBING

A. ENT: Not allowed.

B. RNC: NEMA TC 2, Type EPC-80-PVC, with EPC-80 fittings, unless otherwise indicated.

C. LFMC: Not allowed.

D. Fittings for RNC: NEMA TC 3; match to conduit or tubing type and material.

E. LFNC: Not allowed.

2.03 BOXES, ENCLOSURES, AND CABINETS

A. Sheet Metal Outlet and Device Boxes: NEMA OS 1.

B. Cast-Metal Outlet and Device Boxes: NEMA FB 1, ferrous alloy, Type FD, with gasketed cover.

C. Hinged-Cover Enclosures: NEMA 3R, with continuous-hinge cover with flush latch, unless otherwise indicated.

1. Metal Enclosures: Steel, finished inside and out with manufacturer's standard enamel.

2. Nonmetallic Enclosures: Plastic.

PART 3 - EXECUTION

3.01 RACEWAY APPLICATION

A. Outdoors: Apply raceway products as specified below, unless otherwise indicated:

1. Exposed Conduit: Rigid steel conduit.

2. Underground Conduit: RNC, Type EPC-80 PVC, direct buried with EPC-80 fittings.

B. Indoors: EMT

C. Motor Connections: Liquid tight flexible metal raceway.

D. Comply with the following indoor applications, unless otherwise indicated:

1. Exposed, Not Subject to Physical Damage: EMT.

E. Minimum Raceway Size: 3/4-inch trade size.

F. Raceway Fittings: Compatible with raceways and suitable for use and location.

1. Rigid Conduit: Use threaded rigid steel conduit fittings, unless otherwise indicated.

3.02 INSTALLATION

A. Comply with NECA 1 for installation requirements applicable to products specified in Part 2 except where requirements on Drawings or in this Article are stricter.

B. Complete raceway installation before starting conductor installation.

C. Install no more than the equivalent of three 90-degree bends in any conduit run except for communications conduits, for which fewer bends are allowed.

D. Threaded Conduit Joints, Exposed to Wet, Damp, Corrosive, or Outdoor Conditions: Apply listed compound to threads of raceway and fittings before making up joints. Follow compound manufacturer's written instructions.

E. Install pull wires in empty raceways. Use polypropylene or monofilament plastic line with not less than 200-lb tensile strength. Leave at least 12 inches of slack at each end of pull wire.

3.03 INSTALLATION OF UNDERGROUND CONDUIT

A. Direct-Buried Conduit:

1. Excavate trench bottom to provide firm and uniform support for conduit. Prepare trench bottom with fine grade bedding material.

2. After installing conduit, backfill and compact. Native backfill material is allowed if rocks larger than 6” diameter are removed. Start at tie-in point, and work toward end of conduit run, leaving conduit at end of run free to move with expansion and contraction as temperature changes during this process. Firmly tamp backfill around conduit to provide maximum supporting strength. After placing backfill to within 12 inches of finished grade, make final conduit connection at end of run and complete backfilling with normal compaction.

END OF SECTION 26 05 33

SECTION 26 05 53
IDENTIFICATION FOR ELECTRICAL SYSTEMS

PART 1 - GENERAL

1.01 RELATED DOCUMENTS

A. Drawings and general provisions of the Contract, including General and Supplementary Conditions and Division 01 Specification Sections, apply to this Section.

1.02 SUMMARY

A. Section Includes:

1. Identification for raceways.
2. Identification of power and control cables.
3. Identification for conductors.
4. Underground-line warning tape.
5. Warning labels and signs.
6. Instruction signs.
7. Equipment identification labels.
8. Miscellaneous identification products.
9. Receptacle labels.

1.03 QUALITY ASSURANCE

A. Comply with ANSI A13.1.

B. Comply with NFPA 70.

C. Comply with 29 CFR 1910.144 and 29 CFR 1910.145.

D. Comply with ANSI Z535.4 for safety signs and labels.

E. Adhesive-attached labeling materials, including label stocks, laminating adhesives, and inks used by label printers, shall comply with UL 969.

1.04 COORDINATION

A. Coordinate identification names, abbreviations, colors, and other features with requirements in other Sections requiring identification applications, Drawings, Shop

Drawings, manufacturer's wiring diagrams, and the Operation and Maintenance Manual; and with those required by codes, standards, and 29 CFR 1910.145. Use consistent designations throughout Project.

B. Coordinate installation of identifying devices with completion of covering and painting of surfaces where devices are to be applied.

C. Coordinate installation of identifying devices with location of access panels and doors.

D. Install identifying devices before installing acoustical ceilings and similar concealment.

PART 2 - PRODUCTS

2.01 POWER RACEWAY IDENTIFICATION MATERIALS

A. Comply with ANSI A13.1 for minimum size of letters for legend and for minimum length of color field for each raceway size.

B. Colors for Raceways Carrying Circuits at 600 V or Less:

1. Black letters on an orange field.

C. Self-Adhesive Vinyl Labels for Raceways Carrying Circuits at 600 V or Less: Preprinted, flexible label laminated with a clear, weather- and chemical-resistant coating and matching wraparound adhesive tape for securing ends of legend label.

D. Tape and Stencil for Raceways Carrying Circuits More Than 600 V: 4 inches wide black stripes on 10 inches centers diagonally over orange background that extends full length of raceway or duct and is 12 inches wide. Stop stripes at legends.

2.02 POWER AND CONTROL CABLE IDENTIFICATION MATERIALS

A. Comply with ANSI A13.1 for minimum size of letters for legend and for minimum length of color field for each raceway and cable size. Utilize same label mediums as identified in Part 2.1 above.

2.03 CONDUCTOR IDENTIFICATION MATERIALS

A. Color-Coding Conductor Tape: Colored, self-adhesive vinyl tape not less than 3 mils thick by 1 to 2 inches wide.

B. Self-Adhesive Vinyl Labels: Preprinted, flexible label laminated with a clear, weather- and chemical-resistant coating and matching wraparound adhesive tape for securing ends of legend label.

C. Snap-Around, Color-Coding Bands: Slit, pretensioned, flexible, solid-colored acrylic sleeve, 2 inches long, with diameter sized to suit diameter of raceway or cable it identifies and to stay in place by gripping action.

D. Marker Tapes: Vinyl or vinyl-cloth, self-adhesive wraparound type, with circuit identification legend machine printed by thermal transfer or equivalent process.

2.04 FLOOR MARKING TAPE

A. 2-inch-wide, 5-mil pressure-sensitive vinyl tape, with black and white stripes and clear vinyl overlay.

2.05 UNDERGROUND-LINE WARNING TAPE

A. Tape:

1. Recommended by manufacturer for the method of installation and suitable to identify and locate underground electrical and communications utility lines.

2. Printing on tape shall be permanent and shall not be damaged by burial operations.

3. Tape material and ink shall be chemically inert, and not subject to degrading when exposed to acids, alkalis, and other destructive substances commonly found in soils.

B. Color and Printing:

1. Comply with ANSI Z535.1 through ANSI Z535.5.

2. Inscriptions for Red-Colored Tapes: ELECTRIC LINE, HIGH VOLTAGE.

3. Inscriptions for Orange-Colored Tapes: TELEPHONE CABLE, CATV CABLE, COMMUNICATIONS CABLE, OPTICAL FIBER CABLE.

2.06 WARNING LABELS AND SIGNS

A. Comply with NFPA 70 and 29 CFR 1910.145.

B. Self-Adhesive Warning Labels: Factory-printed, multicolor, pressure-sensitive adhesive labels, configured for display on front cover, door, or other access to equipment unless otherwise indicated.

C. Metal-Backed, Butyrate Warning Signs:

1. Weather-resistant, nonfading, preprinted, cellulose-acetate butyrate signs with 0.0396-inch galvanized-steel backing; and with colors, legend, and size required for application.

2. 1/4-inch grommets in corners for mounting.

3. Nominal size, 10 by 14 inches.

2.07 EQUIPMENT IDENTIFICATION LABELS

A. Engraved, Laminated Acrylic or Melamine Label: Punched or drilled for screw mounting. White letters on a dark-gray background. Minimum letter height shall be 3/8 inch.

2.08 MISCELLANEOUS IDENTIFICATION PRODUCTS

A. Paint: Comply with requirements in Division 09 painting sections for paint materials and application requirements. Select paint system applicable for surface material and location (exterior or interior).

B. Fasteners for Labels and Signs: Self-tapping, stainless-steel screws or stainless-steel machine screws with nuts and flat and lock washers.

PART 3 - EXECUTION

3.01 INSTALLATION

A. Verify identity of each item before installing identification products.

B. Location: Install identification materials and devices at locations for most convenient viewing without interference with operation and maintenance of equipment.

C. Apply identification devices to surfaces that require finish after completing finish work.

D. Self-Adhesive Identification Products: Clean surfaces before application, using materials and methods recommended by manufacturer of identification device.

E. Attach signs and plastic labels that are not self-adhesive type with mechanical fasteners appropriate to the location and substrate.

F. Underground-Line Warning Tape: During backfilling of trenches install continuous underground-line warning tape directly above line at 6 to 8 inches below finished grade. Use multiple tapes where width of multiple lines installed in a common trench or concrete envelope exceeds 16 inches overall.

G. Painted Identification: Comply with requirements in Division 09 painting Sections for surface preparation and paint application.

3.02 IDENTIFICATION SCHEDULE

A. Power-Circuit Conductor Identification, 600 V or Less: For conductors in vaults, pull and junction boxes, manholes, and handholes, use color-coding conductor tape to identify the phase.

1. Color-Coding for Phase and Voltage Level Identification, 600 V or Less:

a. Field-Applied, Color-Coding Conductor Tape: Apply in half-lapped turns for a minimum distance of 6 inches from terminal points and in boxes where splices or taps are made. Apply last two turns of tape with no tension to prevent possible unwinding. Locate bands to avoid obscuring factory cable markings.

b. Apply Colors as Follows:

208Y / 120 Volts	Phase	480 / 277 Volts
Black	A	Brown
Red	B	Orange
Blue	C	Yellow
White		NeutralGrey
Green		Ground Green

B. Conductors to Be Extended in the Future: Attach marker tape to conductors and list source.

C. Auxiliary Electrical Systems Conductor Identification: Identify field-installed alarm, control, and signal connections.

1. Identify conductors, cables, and terminals in enclosures and at junctions, terminals, and pull points. Identify by system and circuit designation.

2. Use system of marker tape designations that is uniform and consistent with system used by manufacturer for factory-installed connections.

3. Coordinate identification with Project Drawings, manufacturer's wiring diagrams, and the Operation and Maintenance Manual.

D. Locations of Underground Lines: Identify with underground-line warning tape for power, lighting, communication, and control wiring and optical fiber cable.

1. Limit use of underground-line warning tape to direct-buried cables.

2. Install underground-line warning tape for both direct-buried cables and cables in raceway.

E. Warning Labels for Indoor Cabinets, Boxes, and Enclosures for Power and Lighting:

1. Comply with 29 CFR 1910.145.

2. Identify system voltage with black letters on an orange background.

3. Apply to exterior of door, cover, or other access.

4. For equipment with multiple power or control sources, apply to door or cover of equipment including, but not limited to, the following:

   a. Power transfer switches.

   b. Controls with external control power connections.

F. Operating Instruction Signs: Install instruction signs to facilitate proper operation and maintenance of electrical systems and items to which they connect. Install instruction signs with approved legend where instructions are needed for system or equipment operation.

G. Emergency Operating Instruction Signs: Install instruction signs with white legend on a red background with minimum 3/8-inch high letters for emergency instructions at equipment used for power transfer.

H. Equipment Identification Labels: On each unit of equipment, install unique designation label that is consistent with wiring diagrams, schedules, and the Operation and Maintenance Manual. Apply labels to disconnect switches and protection equipment, central or master units, control panels, control stations, terminal cabinets, and racks of each system. Systems include power, lighting, control, communication, signal, monitoring, and alarm systems unless equipment is provided with its own identification.

1. Labeling Instructions:

   a. Indoor Equipment: Unless otherwise indicated, provide a single line of text with 1/2-inch high letters on 1-1/2-inch high label; where two lines of text are required, use labels 2 inches high.

   b. Outdoor Equipment: Stenciled legend 4 inches high.

   c. Elevated Components: Increase sizes of labels and letters to those appropriate for viewing from the floor.

   d. Unless provided with self-adhesive means of attachment, fasten labels with appropriate mechanical fasteners that do not change the NEMA or NRTL rating of the enclosure.

2. Equipment to Be Labeled:

   a. Panelboards: Typewritten directory of circuits in the location provided by panelboard manufacturer. Panelboard identification shall be engraved, laminated acrylic or melamine label.

   b. Enclosures and electrical cabinets.

c. Access doors and panels for concealed electrical items.

d. Switchgear.

e. Switchboards.

f. Transformers: Label that includes tag designation shown on Drawings for the transformer, feeder, and panelboards or equipment supplied by the secondary.

g. Emergency system boxes and enclosures.

h. Enclosed switches.

i. Enclosed circuit breakers.

j. Enclosed controllers.

k. Variable-speed controllers.

l. Push-button stations.

m. Power transfer equipment.

n. Contactors.

o. Remote-controlled switches, dimmer modules, and control devices.

p. Power-generating units.

q. Monitoring and control equipment.

I. Receptacle Circuit Labels: Identify all 120 VAC and 208 VAC power receptacle cover plates with serving panel and circuit number designation. Utilize clear self-adhesive label with black letters. Example: "L3 - 25."

END OF SECTION 26 05 53

SECTION 26 24 16
PANELBOARDS

PART 1 - GENERAL

1.01 RELATED DOCUMENTS

A. Drawings and general provisions of the Contract, including General and Supplementary Conditions and Division 01 Specification Sections, apply to this Section.

1.02 SUMMARY

A. This Section includes the following:

1. Distribution panelboards.
2. General lighting and appliance branch-circuit panelboards.
3. Lighting control panelboards.

1.03 DEFINITIONS

A. EMI: Electromagnetic interference.

B. GFCI: Ground-fault circuit interrupter.

C. RFI: Radio-frequency interference.

D. RMS: Root mean square.

E. SPDT: Single pole, double throw.

1.04 SUBMITTALS

A. Product Data: For each type of panelboard, overcurrent protective device, transient voltage suppression device, accessory, and component indicated. Include dimensions and manufacturers' technical data on features, performance, electrical characteristics, ratings, and finishes.

B. Shop Drawings: For each panelboard and related equipment.

1. Dimensioned plans, elevations, sections, and details. Show tabulations of installed devices, equipment features, and ratings. Include the following:

a. Enclosure types and details for types other than NEMA 250, Type 1.

b. Bus configuration, current, and voltage ratings.

c. Short-circuit current rating of panelboards and overcurrent protective devices.

d. UL listing for series rating of installed devices.

e. Features, characteristics, ratings, and factory settings of individual overcurrent protective devices and auxiliary components.

2. Wiring Diagrams: Power, signal, and control wiring.

C. Panelboard Schedules: For installation in panelboards. Submit final versions after load balancing.

D. Operation and Maintenance Data: For panelboards and components to include in emergency, operation, and maintenance manuals. In addition to items specified in Division 01 Section "Operation and Maintenance Data," include the following:

1. Manufacturer's written instructions for testing and adjusting overcurrent protective devices.

2. Time-current curves, including selectable ranges for each type of overcurrent protective device.

1.05 COORDINATION

A. Coordinate layout and installation of panelboards and components with other construction that penetrates walls or is supported by them, including electrical and other types of equipment, raceways, piping, and encumbrances to workspace clearance requirements.

B. Coordinate size and location of concrete bases. Cast anchor-bolt inserts into bases. Concrete, reinforcement, and formwork requirements are specified in Division 03.

1.06 EXTRA MATERIALS

A. Furnish extra materials described below that match products installed and that are packaged with protective covering for storage and identified with labels describing contents.

1. Keys: Six spares for each type of panelboard cabinet lock.

PART 2 - PRODUCTS

2.01 MANUFACTURERS

A. Manufacturers: Subject to compliance with requirements, provide products by one of the following:

1. Panelboards, Overcurrent Protective Devices, Controllers, Contactors, and Accessories:

a. Eaton Corporation; Cutler-Hammer Products.

b. General Electric Co.; Electrical Distribution & Protection Div.

c. Siemens Energy & Automation, Inc.

d. Square D.

2.02 MANUFACTURED UNITS

A. Fabricate and test panelboards according to IEEE 344 to withstand seismic forces

B. Enclosures: Flush- and surface-mounted cabinets as indicated on the Construction Documents.

1. NEMA rating as indicated on Construction Documents Panel Schedules and Risers.
2. Front: Secured to box with concealed trim clamps. For surface-mounted fronts, match box dimensions; for flush-mounted fronts, overlap box.
3. Standard Hinged Front Cover: Entire front trim hinged to box and with standard door within hinged trim cover.
4. Finish: Manufacturer's standard enamel finish over corrosion-resistant treatment or primer coat.
5. Directory Card: With transparent protective cover, mounted in metal frame, inside panelboard door.

C. Phase and Ground Buses:

1. Material: Hard-drawn copper, 98 percent conductivity.
2. Equipment Ground Bus: Adequate for feeder and branch-circuit equipment ground conductors; bonded to box.
3. Neutral Bus: Neutral bus rated minimum 100 percent of phase bus and UL listed as suitable for nonlinear loads.
4. Split Bus: Vertical buses divided into individual vertical sections.

D. Conductor Connectors: Suitable for use with conductor material.

1. Main and Neutral Lugs: Mechanical type.
2. Ground Lugs and Bus Configured Terminators: Mechanical type.

E. Future Devices: Mounting brackets, bus connections, and necessary appurtenances required for future installation of devices.

2.03 PANELBOARD SHORT-CIRCUIT RATING

A. Fully rated to interrupt symmetrical short-circuit current available at terminals.

2.04 DISTRIBUTION PANELBOARDS

A. Doors: Secured with vault-type latch with tumbler lock; keyed alike. Omit for fused-switch panelboards.

B. Main Overcurrent Protective Devices: Circuit breaker with electronic (static) trip.

C. Branch Overcurrent Protective Devices:

1. For Circuit-Breaker Frame Sizes 125 A and Smaller: Bolt-on circuit breakers.
2. For Circuit-Breaker Frame Sizes Larger Than 125 A: Bolt-on circuit breakers; plug-in circuit breakers where individual positive-locking device requires mechanical release for removal.
3. Circuit breaker sizes 50 A to 100 A shall have a minimum of an adjustable long time and instantaneous feature.
4. Circuit breaker sizes larger than 100 A shall be electronic (static) trip.

2.05 GENERAL LIGHTING AND APPLIANCE BRANCH-CIRCUIT PANELBOARDS

A. Main Overcurrent and Sub-feed Protective Devices. Sizes 50 A to 100 A shall have minimum of an adjustable long time and instantaneous feature. Sizes larger than 100 A shall be electronic (static) type.

B. Branch Overcurrent Protective Devices: Thermal Magnetic type, bolt-on circuit breakers, replaceable without disturbing adjacent units. Coordinate paragraph below with Drawings.

C. Doors: Concealed hinges; secured with flush latch with tumbler lock; keyed alike.

2.06 LOAD CENTERS

A. Not allowed, unless specifically specified elsewhere in the Specifications or Construction Documents.

2.07 OVERCURRENT PROTECTIVE DEVICES

A. Molded-Case Circuit Breaker: UL 489, with interrupting capacity to meet available fault currents.

1. Thermal-Magnetic Circuit Breakers: Inverse time-current element for low-level overloads, and instantaneous magnetic trip element for short circuits.

2. Adjustable Instantaneous-Trip Circuit Breakers: Magnetic trip element with front-mounted, field-adjustable trip setting.

3. Molded-Case Circuit-Breaker Standard Features and Accessories: Standard frame sizes, trip ratings, and number of poles.

a. Lugs: Mechanical style, suitable for number, size, trip ratings, and conductor materials.

b. Application Listing: Appropriate for application; Type SWD for switching fluorescent lighting loads; Type HACR for heating, air-conditioning, and refrigerating equipment.

4. Molded-Case Circuit Breaker Special Features and Accessories: (Only where indicated in Construction Documents Schedules or notes.)

a. GFCI Circuit Breakers: Single- and two-pole configurations with 30-mA trip sensitivity, 5-mA trip for breakers serving GFCI receptacle circuits.

b. Shunt Trip: 120-V trip coil energized from separate circuit, set to trip at 75 percent of rated voltage.

2.08 ACCESSORY COMPONENTS AND FEATURES

A. Furnish accessory set including tools and miscellaneous items required for overcurrent protective device test, inspection, maintenance, and operation.

B. Furnish portable test set to test functions of solid-state trip devices without removal from panelboard.

PART 3 - EXECUTION

3.01 INSTALLATION

A. Install panelboards and accessories according to NEMA PB 1.1.

B. Mount top of trim 74 inches (1880 mm) above finished floor, unless otherwise indicated.

C. Mount plumb and rigid without distortion of box. Mount recessed panelboards with fronts uniformly flush with wall finish.

D. Install overcurrent protective devices and controllers.

1. Set field-adjustable switches and circuit-breaker trip ranges.

E. Install filler plates in unused spaces.

F. Arrange conductors in gutters into groups and bundle and wrap with wire ties after completing load balancing.

3.02 IDENTIFICATION

A. Identify field-installed conductors, interconnecting wiring, and components; provide warning signs as specified in Division 26 Section "Identification for Electrical Systems."

B. Create a directory to indicate installed circuit loads after balancing panelboard loads. Obtain approval before installing. Use a computer or typewriter to create directory; handwritten directories are not acceptable.

C. Panelboard Nameplates: Label each panelboard with engraved metal or laminated-plastic nameplate mounted with corrosion-resistant screws.

3.03 CONNECTIONS

A. Ground equipment according to Division 26 Section "Grounding and Bonding for Electrical Systems."

B. Connect wiring according to Division 26 Section "Low-Voltage Electrical Power Conductors and Cables."

3.04 CLEANING

A. On completion of installation, inspect interior and exterior of panelboards. Remove paint splatters and other spots. Vacuum dirt and debris; do not use compressed air to assist in cleaning. Repair exposed surfaces to match original finish.

END OF SECTION 26 24 16

SECTION 26 27 26
WIRING DEVICES

PART 1 - GENERAL

1.01 RELATED DOCUMENTS

A. Drawings and general provisions of the Contract, including General and Supplementary Conditions and Division 01 Specification Sections, apply to this Section.

1.02 SUMMARY

A. Section Includes:

1. General use receptacles, 125 V, 20 A.

2. GFCI receptacles, 125 V, 20 A.

3. Wall plates.

1.03 DEFINITIONS

A. AFCI: Arc-fault circuit interrupter.

B. BAS: Building automation system.

C. EMI: Electromagnetic interference.

D. GFCI: Ground-fault circuit interrupter.

E. Pigtail: Short lead used to connect a device to a branch-circuit conductor.

F. RFI: Radio-frequency interference.

G. SPD: Surge protective device.

1.04 ACTION SUBMITTALS

A. Product Data: For each type of product.

1.05 INFORMATIONAL SUBMITTALS

A. Field quality-control reports.

1.06 CLOSEOUT SUBMITTALS

A. Operation and Maintenance Data: For wiring devices to include in all manufacturers' packing-label warnings and instruction manuals that include labeling conditions.

PART 2 - PRODUCTS

2.01 GENERAL WIRING-DEVICE REQUIREMENTS

A. Wiring Devices, Components, and Accessories: Listed and labeled as defined in NFPA 70, by a qualified testing agency, and marked for intended location and use.

B. Comply with NFPA 70.

C. RoHS compliant.

D. Comply with NEMA WD 1.

E. Devices that are manufactured for use with modular plug-in connectors may be substituted under the following conditions:

1. Connectors shall comply with UL 2459 and shall be made with stranding building wire.

2. Devices shall comply with requirements in this Section.

F. Device Color:

1. Wiring Devices Connected to Normal Power System: White unless otherwise indicated or required by NFPA 70 or device listing.

G. Wall Plate Color: For plastic covers, match device color.

H. Source Limitations: Obtain each type of wiring device and associated wall plate from single source from single manufacturer.

2.02 GENERAL USE RECEPTACLES, 125 V, 20 A

A. Industrial Grade

B. Duplex Receptacles, 125 V, 20 A:

1. Description: Two pole, three wire, and self-grounding.

2. Configuration: NEMA WD 6, Configuration 5-20R.

3. Standards: Comply with UL 498 and FS W-C-596.

C. Weather-Resistant Duplex Receptacle, 125 V, 20 A:

1. Description: Two pole, three wire, and self-grounding. Integral shutters that operate only when a plug is inserted in the receptacle. Square face.

2. Configuration: NEMA WD 6, Configuration 5-20R.

3. Standards: Comply with UL 498.

4. Marking: Listed and labeled as complying with NFPA 70, "Receptacles in Damp or Wet Locations" Article.

2.03 GFCI RECEPTACLES, 125 V, 20 A

A. Industrial Grade

B. Duplex GFCI Receptacles, 125 V, 20 A:

1. Description: Integral GFCI with "Test" and "Reset" buttons and LED indicator light. Two pole, three wire, and self-grounding.

2. Configuration: NEMA WD 6, Configuration 5-20R.

3. Type: Non-feed through.

4. Standards: Comply with UL 498, UL 943 Class A, and FS W-C-596.

2.04 TOGGLE SWITCHES, 120/277 V, 20 A

A. Industrial Grade

B. Single-Pole Switches, 120/277 V, 20 A:

1. Standards: Comply with UL 20 and FS W-S-896.

C. Two-Pole Switches, 120/277 V, 20 A:

1. Comply with UL 20 and FS W-S-896.

D. Three-Way Switches, 120/277 V, 20 A:

1. Comply with UL 20 and FS W-S-896.

E. Four-Way Switches, 120/277 V, 20 A:

1. Standards: Comply with UL 20 and FS W-S-896.

2.05 WALL PLATES

A. Single Source: Obtain wall plates from same manufacturer of wiring devices.

B. Single and combination types shall match corresponding wiring devices.

1. Plate-Securing Screws: Metal with head color to match plate finish.

2. Material for Finished Spaces: Smooth, high-impact thermoplastic.

3. Material for Unfinished Spaces: Galvanized steel.

4. Material for Damp Locations: Thermoplastic with spring-loaded lift cover, and listed and labeled for use in wet and damp locations.

C. Wet-Location, Weatherproof Cover Plates: NEMA 250, complying with Type 3R, weather-resistant, die-cast aluminum with lockable cover.

PART 3 - EXECUTION

3.01 INSTALLATION

A. Comply with NECA 1, including mounting heights listed in that standard, unless otherwise indicated.

B. Coordination with Other Trades:

1. Protect installed devices and their boxes. Do not place wall finish materials over device boxes, and do not cut holes for boxes with routers that are guided by riding against outside of boxes.

2. Keep outlet boxes free of plaster, drywall joint compound, mortar, cement, concrete, dust, paint, and other material that may contaminate the raceway system, conductors, and cables.

3. Install device boxes in brick or block walls so that the cover plate does not cross a joint unless the joint is troweled flush with the face of the wall.

4. Install wiring devices after all wall preparation, including painting, is complete.

C. Conductors:

1. Do not strip insulation from conductors until right before they are spliced or terminated on devices.

2. Strip insulation evenly around the conductor using tools designed for the purpose. Avoid scoring or nicking of solid wire or cutting strands from stranded wire.

3. The length of free conductors at outlets for devices shall comply with NFPA 70, Article 300, without pigtails.

4. Existing Conductors:

a. Cut back and pigtail or replace all damaged conductors.

b. Straighten conductors that remain and remove corrosion and foreign matter.

c. Pigtailing existing conductors is permitted, provided the outlet box is large enough.

D. Device Installation:

1. Replace devices that have been in temporary use during construction and that were installed before building finishing operations were complete.

2. Keep each wiring device in its package or otherwise protected until it is time to connect conductors.

3. Do not remove surface protection, such as plastic film and smudge covers, until the last possible moment.

4. Connect devices to branch circuits using pigtails that are not less than 6 inches in length.

5. When there is a choice, use side wiring with binding-head screw terminals. Wrap solid conductor tightly clockwise, two-thirds to three-fourths of the way around terminal screw.

6. Use a torque screwdriver when a torque is recommended or required by manufacturer.

7. When conductors larger than No. 12 AWG are installed on 15- or 20-A circuits, splice No. 12 AWG pigtails for device connections.

8. Tighten unused terminal screws on the device.

9. When mounting into metal boxes, remove the fiber or plastic washers used to hold device-mounting screws in yokes, allowing metal-to-metal contact.

E. Receptacle Orientation:

1. Install ground pin of vertically mounted receptacles down, and on horizontally mounted receptacles to the right.

F. Device Plates: Do not use oversized or extra-deep plates. Repair wall finishes and remount outlet boxes when standard device plates do not fit flush or do not cover rough wall opening.

G. Arrangement of Devices: Unless otherwise indicated, mount flush, with long dimension vertical and with grounding terminal of receptacles on top. Group adjacent switches under single, multigang wall plates.

H. Adjust locations of floor service outlets and service poles to suit arrangement of partitions and furnishings.

3.02 GFCI RECEPTACLES

A. Feed-through GFCI receptacles for protection of downstream receptacles is not allowed.

3.03 IDENTIFICATION

A. Comply with Section 260553 "Identification for Electrical Systems."

B. Identify each receptacle with panelboard identification and circuit number. Use clear label with black lettering on the face of the plate, and durable wire markers or tags inside the outlet box.

END OF SECTION 26 27 26

SECTION 26 28 16
ENCLOSED SWITCHES AND CIRCUIT BREAKERS

PART 1 - GENERAL

1.01 RELATED DOCUMENTS

A. Drawings and general provisions of the Contract, including General and Supplementary Conditions and other Division 01 Specification Sections, apply to this Section.

1.02 SUMMARY

A. This Section includes the following individually mounted, enclosed switches and circuit breakers:

1. Fusible switches.

2. Nonfusible switches.

1.03 DEFINITIONS

A. GD: General duty.

B. GFCI: Ground-fault circuit interrupter.

C. HD: Heavy duty.

D. RMS: Root mean square.

E. SPDT: Single pole, double throw.

1.04 SUBMITTALS

A. Product Data: For each type of enclosed switch, circuit breaker, accessory, and component indicated. Include dimensioned elevations, sections, weights, and manufacturers' technical data on features, performance, electrical characteristics, ratings, and finishes.

1. Enclosure types and details for types other than NEMA 250, Type 1.

2. Current and voltage ratings.

3. Short-circuit current rating.

4. UL listing for series rating of installed devices.

5. Features, characteristics, ratings, and factory settings of individual overcurrent protective devices and auxiliary components.

B. Shop Drawings: Diagram power, signal, and control wiring.

C. Manufacturer's field service report.

D. Operation and Maintenance Data: For enclosed switches and circuit breakers to include in emergency, operation, and maintenance manuals. In addition to items specified in Division 01 Section "Operation and Maintenance Data," include the following:

1. Manufacturer's written instructions for testing and adjusting enclosed switches and circuit breakers.

2. Time-current curves, including selectable ranges for each type of circuit breaker.

1.05 QUALITY ASSURANCE

A. Electrical Components, Devices, and Accessories: Listed and labeled as defined in NFPA 70, Article 100, by a testing agency acceptable to authorities having jurisdiction, and marked for intended use.

B. Comply with NFPA 70.

C. Product Selection for Restricted Space: Drawings indicate maximum dimensions for enclosed switches and circuit breakers, including clearances between enclosures, and adjacent surfaces and other items. Comply with indicated maximum dimensions.

D. Source Limitations: Obtain disconnect switches and enclosed circuit breakers from one manufacturer.

1.06 PROJECT CONDITIONS

A. Environmental Limitations: Rate equipment for continuous operation under the following conditions, unless otherwise indicated:

1. Ambient Temperature: Not less than minus 22 deg F and not exceeding 104 deg F.

2. Altitude: Not exceeding 6600 feet.

1.07 COORDINATION

A. Coordinate layout and installation of switches, circuit breakers, and components with other construction, including conduit, piping, equipment, and adjacent surfaces. Maintain required workspace clearances and required clearances for equipment access doors and panels.

1.08 EXTRA MATERIALS

A. Furnish extra materials described below that match products installed and that are packaged with protective covering for storage and identified with labels describing contents.

1. Spares: For the following:

    a. Fuses for Fusible Switches: 10 percent.

PART 2 - PRODUCTS

2.01 MANUFACTURERS

A. Manufacturers: Subject to compliance with requirements, provide products by one of the manufacturers specified.

1. Eaton Corporation; Cutler-Hammer.

2. General Electric Company.

3. Siemens.

4. Square D.

2.02 FUSIBLE AND NONFUSIBLE SWITCHES

A. Fusible Switch, 800 A and Smaller: NEMA KS 1, Type HD, with clips or bolt pads to accommodate specified fuses, lockable handle with capability to accept two padlocks, and interlocked with cover in closed position.

B. Nonfusible Switch, 800 A and Smaller: NEMA KS 1, Type GD, lockable handle with capability to accept two padlocks, and interlocked with cover in closed position.

C. Accessories:

1. Equipment Ground Kit: Internally mounted and labeled for copper and aluminum ground conductors.

2. Neutral Kit: Internally mounted; insulated, capable of being grounded, and bonded; and labeled for copper and aluminum neutral conductors.

3. Auxiliary Contact Kit: Auxiliary set of contacts arranged to open before switch blades open.

    a. Ground-fault pickup level, time delay, and I^2t response.

2.03 ENCLOSURES

A. Surface mounted and NEMA rating as indicated on Construction Documents.

PART 3 - EXECUTION

3.01 EXAMINATION

A. Examine elements and surfaces to receive enclosed switches and circuit breakers for compliance with installation tolerances and other conditions affecting performance.

B. Proceed with installation only after unsatisfactory conditions have been corrected.

3.02 INSTALLATION

A. Comply with applicable portions of NECA 1, NEMA PB 1.1, and NEMA PB 2.1 for installation of enclosed switches and circuit breakers.

B. Mount individual wall-mounting switches and circuit breakers with tops at uniform height, unless otherwise indicated. Anchor floor-mounting switches to concrete base.

C. Temporary Lifting Provisions: Remove temporary lifting eyes, channels, and brackets and temporary blocking of moving parts from enclosures and components.

3.03 IDENTIFICATION

A. Identify field-installed conductors, interconnecting wiring, and components; provide warning signs as specified in Division 26 Section "Identification for Electrical Systems."

B. Enclosure Nameplates: Label each enclosure with engraved metal or laminated-plastic nameplate as specified in Division 26 Section "Identification for Electrical Systems."

3.04 FIELD QUALITY CONTROL

A. Perform the following field tests and inspections and prepare test reports:

1. Test mounting and anchorage devices according to requirements in Division 26 Section "Vibration and Seismic Controls for Electrical Systems."

2. Perform each electrical test and visual and mechanical inspection stated in NETA ATS, Section 7.5 for switches and Section 7.6 for molded-case circuit breakers. Certify compliance with test parameters.

3. Correct malfunctioning units on-site, where possible, and retest to demonstrate compliance; otherwise, replace with new units and retest.

3.05 ADJUSTING

A. Set field-adjustable switches and circuit-breaker trip ranges.

3.06 CLEANING

A. On completion of installation, vacuum dirt and debris from interiors; do not use compressed air to assist in cleaning.

B. Inspect exposed surfaces and repair damaged finishes.

END OF SECTION 26 28 16

SECTION 26 32 13
ENGINE GENERATORS

PART 1 - GENERAL

1.01 RELATED DOCUMENTS

A. Drawings and general provisions of the Contract, including General and Supplementary Conditions and Division 01 Specification Sections, apply to this Section.

1.02 SUMMARY

A. This Section includes packaged engine-generator sets for emergency power supply with the following features:

1. Diesel engine.
2. Unit-mounted cooling system.
3. Unit-mounted control and monitoring.
4. Performance requirements for sensitive loads.
5. Outdoor enclosure.

B. Related Sections include the following:

1. Division 26 36 23 Section "Transfer Switches" for transfer switches including sensors and relays to initiate automatic-starting and -stopping signals for engine-generator sets.

1.03 DEFINITIONS

A. Operational Bandwidth: The total variation from the lowest to highest value of a parameter over the range of conditions indicated, expressed as a percentage of the nominal value of the parameter.

1.04 SUBMITTALS

A. Product Data: For each type of packaged engine generator indicated. Include rated capacities, operating characteristics, and furnished specialties and accessories. In addition, include the following:

1. Thermal damage curve for generator.
2. Time-current characteristic curves for generator protective device.

B. Shop Drawings: Detail equipment assemblies and indicate dimensions, weights, loads, required clearances, method of field assembly, components, and location and size of each field connection.

1. Dimensioned outline plan and elevation drawings of engine-generator set and other components specified.
2. Wiring Diagrams: Power, signal, and control wiring.

C. Source quality-control test reports.

1. Report of sound generation.
2. Report of exhaust emissions showing compliance with applicable regulations.

D. Field quality-control test reports.

E. Operation and Maintenance Data: For packaged engine generators to include in emergency, operation, and maintenance manuals. In addition to items specified in Division 01 Section "Operation and Maintenance Data," include the following:

1. List of tools and replacement items recommended to be stored at Project for ready access. Include part and drawing numbers, current unit prices, and source of supply.

F. Warranty: Special warranty specified in this Section.

1.05 QUALITY ASSURANCE

A. Installer Qualifications: Manufacturer's authorized representative who is trained and approved for installation of units required for this Project.

1. Maintenance Proximity: Not more than three hours normal travel time from Installer's place of business to Project site.
2. Engineering Responsibility: Preparation of data for vibration isolators and seismic restraints of engine skid mounts, including Shop Drawings, based on testing and engineering analysis of manufacturer's standard units in assemblies similar to those indicated for this Project.

B. Manufacturer Qualifications: A qualified manufacturer. Maintain, within three hours of Project site, a service center capable of providing training, parts, and emergency maintenance repairs.

C. Testing Agency Qualifications: An agency, with the experience and capability to conduct the testing indicated, that is a member company of the InterNational Electrical Testing Association or is a nationally recognized testing laboratory (NRTL), and that is acceptable to authorities having jurisdiction (or demonstrated equal experience).

1. Testing Agency's Field Supervisor: Person currently certified by the InterNational Electrical Testing Association or the National Institute for Certification in Engineering Technologies to supervise on-site testing specified in Part 3.

D. Source Limitations: Obtain packaged generator sets and auxiliary components through one source from a single manufacturer.

E. Electrical Components, Devices, and Accessories: Listed and labeled as defined in NFPA 70, Article 100, by a testing agency acceptable to authorities having jurisdiction, and marked for intended use.

F. Comply with ASME B15.1.

G. Comply with NFPA 37.

H. Comply with NFPA 70.

I. Comply with NFPA 110 requirements for Level 1 emergency power supply system.

J. Comply with UL 3800.

K. Engine Exhaust Emissions: Comply with applicable state and local government requirements.

1.06 PROJECT CONDITIONS

A. Environmental Conditions: Engine-generator system shall withstand the following environmental conditions without mechanical or electrical damage or degradation of performance capability:

1. Ambient Temperature: minus 50 deg F to plus 120 deg F.
2. Altitude: Sea level to 3200 feet.

1.07 COORDINATION

A. Coordinate size and location of concrete bases for package engine generators. Cast anchor-bolt inserts into bases. Concrete, reinforcement, and formwork requirements are specified in Division 03.

1.08 WARRANTY

A. Special Warranty: Manufacturer's standard form in which manufacturer agrees to repair or replace components of packaged engine generators and associated auxiliary components that fail in materials or workmanship within specified warranty period.

1. Warranty Period: Five years from date of Substantial Completion.

1.09 MAINTENANCE SERVICE

A. Initial Maintenance Service: Beginning at Substantial Completion, provide 12 months' full maintenance by skilled employees of manufacturer's designated service organization. Include quarterly exercising to check for proper starting, load transfer, and running under load. Include routine preventive maintenance as recommended by

manufacturer and adjusting as required for proper operation. Provide parts and supplies same as those used in the manufacture and installation of original equipment.

PART 2 - PRODUCTS

2.01 MANUFACTURERS

A. Manufacturers: Subject to compliance with requirements, provide products by one of the following or approved equal:

1. Caterpillar; Engine Div.
2. Generac Power Systems, Inc.
3. Onan/Cummins Power Generation; Industrial Business Group.

2.02 ENGINE-GENERATOR SET

A. Factory-assembled and -tested, engine-generator set.

B. Mounting Frame: Maintain alignment of mounted components without depending on concrete foundation; and have lifting attachments.

1. Rigging Diagram: Inscribed on metal plate permanently attached to mounting frame to indicate location and lifting capacity of each lifting attachment and generator-set center of gravity.

C. Capacities and Characteristics:

1. Power Output Ratings: Nominal ratings as indicated**,** with capacity as required to operate as a unit as evidenced by records of prototype testing.
2. Output Connections: Three-phase, four wire.
3. Nameplates: For each major system component to identify manufacturer's name and address, and model and serial number of component.

D. Generator-Set Performance for Sensitive Loads:

1. Oversizing generator compared with the rated power output of the engine is permissible to meet specified performance.
   a. Nameplate Data for Oversized Generator: Show ratings required by the Contract Documents rather than ratings that would normally be applied to generator size installed.
2. Steady-State Voltage Operational Bandwidth: 1 percent of rated output voltage from no load to full load.
3. Transient Voltage Performance: Not more than 10 percent variation for 50 percent step-load increase or decrease. Voltage shall recover and remain within the steady-state operating band within 0.5 second.

4. Steady-State Frequency Operational Bandwidth: Plus or minus 0.25 percent of rated frequency from no load to full load.

5. Steady-State Frequency Stability: When system is operating at any constant load within the rated load, there shall be no random speed variations outside the steady-state operational band and no hunting or surging of speed.

6. Transient Frequency Performance: Less than 2-Hz variation for 50 percent step-load increase or decrease. Frequency shall recover and remain within the steady-state operating band within three seconds.

7. Output Waveform: At no load, harmonic content measured line to neutral shall not exceed 2 percent total with no slot ripple. Telephone influence factor, determined according to NEMA MG 1, shall not exceed 50 percent.

8. Sustained Short-Circuit Current: For a 3-phase, bolted short circuit at system output terminals, system shall supply a minimum of 300 percent of rated full-load current for not less than 10 seconds and then clear the fault automatically, without damage to winding insulation or other generator system components.

9. Excitation System: Performance shall be unaffected by voltage distortion caused by nonlinear load.

    a. Provide permanent magnet excitation for power source to voltage regulator.

10. Start Time: Comply with NFPA 110, Type 10, system requirements.

2.03 ENGINE

A. Fuel: Fuel oil, Grade DF-2.

B. Rated Engine Speed: 1800 rpm.

C. Maximum Piston Speed for Four-Cycle Engines: 2250 fpm.

D. Lubrication System: The following items are mounted on engine or skid:

1. Filter and Strainer: Rated to remove 90 percent of particles 5 micrometers and smaller while passing full flow.

2. Thermostatic Control Valve: Control flow in system to maintain optimum oil temperature. Unit shall be capable of full flow and is designed to be fail-safe.

3. Crankcase Drain: Arranged for complete gravity drainage to an easily removable container with no disassembly and without use of pumps, siphons, special tools, or appliances.

E. Engine Fuel System:

1. Main Fuel Pump: Mounted on engine. Pump ensures adequate primary fuel flow under starting and load conditions.

2. Relief-Bypass Valve: Automatically regulates pressure in fuel line and returns excess fuel to source.

F. Coolant Jacket Heater: Electric-immersion type, factory installed in coolant jacket system. Comply with NFPA 110 requirements for Level 1 equipment for heater capacity.

G. Governor: Adjustable isochronous, with speed sensing.

H. Cooling System: Closed loop, liquid cooled, with radiator factory mounted on engine-generator-set mounting frame and integral engine-driven coolant pump.

1. Coolant: Solution of 50 percent ethylene-glycol-based antifreeze and 50 percent water, with anticorrosion additives as recommended by engine manufacturer.

2. Size of Radiator: Adequate to contain expansion of total system coolant from cold start to 110 percent load condition.

3. Expansion Tank: Constructed of welded steel plate and rated to withstand maximum closed-loop coolant system pressure for engine used. Equip with gage glass and petcock.

4. Temperature Control: Self-contained, thermostatic-control valve modulates coolant flow automatically to maintain optimum constant coolant temperature as recommended by engine manufacturer.

5. Coolant Hose: Flexible assembly with inside surface of nonporous rubber and outer covering of aging-, ultraviolet-, and abrasion-resistant fabric.

a. Rating: 50-psig maximum working pressure with coolant at 180 deg F, and noncollapsible under vacuum.

b. End Fittings: Flanges or steel pipe nipples with clamps to suit piping and equipment connections.

I. Cooling System: Closed loop, liquid cooled, with remote radiator and integral engine-driven coolant pump.

1. Configuration: Horizontal air discharge.

2. Radiator Core Tubes: Aluminum or nonferrous-metal**.**

3. Size of Radiator: Adequate to contain expansion of total system coolant from cold start to 110 percent load condition.

4. Fan: Driven by multiple belts from engine shaft.

5. Coolant: Solution of 50 percent ethylene-glycol-based antifreeze and 50 percent water, with anticorrosion additives as recommended by engine manufacturer.

6. Temperature Control: Self-contained, thermostatic-control valve modulates coolant flow automatically to maintain optimum constant coolant temperature as recommended by engine manufacturer.

J. Muffler/Silencer: Critical type, sized as recommended by engine manufacturer and selected with exhaust piping system to not exceed engine manufacturer's engine backpressure requirements.

1. Minimum sound attenuation of 25 dB at 500 Hz.
2. Sound level measured at a distance of 10 feet from exhaust discharge after installation is complete shall be 85 dBA or less.

K. Air-Intake Filter: Heavy-duty, engine-mounted air cleaner with replaceable dry-filter element and "blocked filter" indicator.

L. Starting System: 12 or 24-V electric, with negative ground.

1. Components: Sized so they will not be damaged during a full engine-cranking cycle with ambient temperature at maximum specified in Part 1 "Project Conditions" Article.
2. Cranking Motor: Heavy-duty unit that automatically engages and releases from engine flywheel without binding.
3. Cranking Cycle: As required by NFPA 110 for system level specified.
4. Battery: Adequate capacity within ambient temperature range specified in Part 1 "Project Conditions" Article to provide specified cranking cycle at least three times without recharging.
5. Battery Cable: Size as recommended by engine manufacturer for cable length indicated. Include required interconnecting conductors and connection accessories.
6. Battery Compartment: Factory fabricated of metal with acid-resistant finish and thermal insulation. Thermostatically controlled heater shall be arranged to maintain battery above 10 deg C regardless of external ambient temperature within range specified in Part 1 "Project Conditions" Article. Include accessories required to support and fasten batteries in place.
7. Battery-Charging Alternator: Factory mounted on engine with solid-state voltage regulation and 35-A minimum continuous rating.
8. Battery Charger: Current-limiting, automatic-equalizing and float-charging type. Unit shall comply with UL 1236 and include the following features:
   a. Operation: Equalizing-charging rate of 10 A shall be initiated automatically after battery has lost charge until an adjustable equalizing voltage is achieved at battery terminals. Unit shall then be automatically switched to a lower float-charging mode and shall continue to operate in that mode until battery is discharged again.
   b. Automatic Temperature Compensation: Adjust float and equalize voltages for variations in ambient temperature from minus 40 deg C to plus 60 deg C to prevent overcharging at high temperatures and undercharging at low temperatures.
   c. Automatic Voltage Regulation: Maintain constant output voltage regardless of input voltage variations up to plus or minus 10 percent.

d. Ammeter and Voltmeter: Flush mounted in door. Meters shall indicate charging rates.

e. Safety Functions: Sense abnormally low battery voltage and close contacts providing low battery voltage indication on control and monitoring panel. Sense high battery voltage and loss of ac input or dc output of battery charger. Either condition shall close contacts that provide a battery-charger malfunction indication at system control and monitoring panel.

f. Enclosure and Mounting: NEMA 250, Type 1, wall-mounted cabinet.

2.04 FUEL OIL STORAGE

A. Comply with NFPA 30.

B. Base-Mounted Fuel Oil Tank: Factory installed and piped, complying with UL 142 fuel oil tank. Features include the following:

1. Tank level indicator.

2. Capacity: Fuel for 36 hours' continuous operation at 100 percent rated power output.

3. Vandal-resistant fill cap.

4. Containment Provisions: 110% of tank capacity with leak detection.

5. Low-Level Alarm Sensor: Liquid-level device operates alarm contacts at 25 percent of normal fuel level.

6. Fuel in rupture basin alarm.

2.05 CONTROL AND MONITORING

A. Automatic Starting System Sequence of Operation: When mode-selector switch on the control and monitoring panel is in the automatic position, remote-control contacts in one or more separate automatic transfer switches initiate starting and stopping of generator set. When mode-selector switch is switched to the on position, generator set starts. The off position of same switch initiates generator-set shutdown. When generator set is running, specified system or equipment failures or derangements automatically shut down generator set and initiate alarms. Operation of a remote emergency-stop switch also shuts down generator set.

B. Manual Starting System Sequence of Operation: Switching on-off switch on the generator control panel to the on position starts generator set. The off position of same switch initiates generator-set shutdown. When generator set is running, specified system or equipment failures or derangements automatically shut down generator set and initiate alarms. Operation of a remote emergency-stop switch also shuts down generator set.

C. Indicating and Protective Devices and Controls: As required by NFPA 110 for Level 1 system, and the following:

1. AC voltmeter.
2. AC ammeter.
3. AC frequency meter.
4. DC voltmeter (alternator battery charging).
5. Engine-coolant temperature gage.
6. Engine lubricating-oil pressure gage.
7. Running-time meter.
8. Ammeter-voltmeter, phase-selector switch(es).
9. Generator-voltage adjusting rheostat.
10. Fuel tank derangement alarm.
11. Fuel tank low-level alarm.
12. Generator overload.

D. Supporting Items: Include sensors, transducers, terminals, relays, and other devices and include wiring required to support specified items. Locate sensors and other supporting items on engine or generator, unless otherwise indicated.

E. Connection to Data Link: A separate terminal block, factory wired to Form C dry contacts, for each alarm and status indication to be monitored by the building automation system.

F. Common Remote Audible Alarm: Comply with NFPA 110 requirements for Level 1 systems. Include necessary contacts and terminals in control and monitoring panel.

1. Overcrank shutdown.
2. Coolant low-temperature alarm.
3. Control switch not in auto position.
4. Battery-charger malfunction alarm.
5. Battery low-voltage alarm.
6. Engine high-temperature shutdown.
7. Lube-oil, low-pressure shutdown.
8. Overspeed shutdown.
9. Engine high-temperature prealarm.
10. Lube-oil, low-pressure prealarm.
11. Fuel tank, low-fuel level.
12. Low coolant level.

2.06 GENERATOR OVERCURRENT AND FAULT PROTECTION

A. Generator Circuit Breaker: Molded-case, thermal magnetic breaker.

B. Generator Protector: Microprocessor-based unit shall continuously monitor current level in each phase of generator output, integrate generator heating effect over time, and predict when thermal damage of alternator will occur. When signaled by generator protector or other generator-set protective devices, a shunt-trip device in the generator disconnect switch shall open the switch to disconnect the generator from load circuits. Protector shall perform the following functions:

1. Initiates a generator overload alarm when generator has operated at an overload equivalent to 110 percent of full-rated load for 60 seconds. Indication for this alarm is integrated with other generator-set malfunction alarms.
2. Under single or three-phase fault conditions, regulates generator to 300 percent of rated full-load current for up to 10 seconds.
3. As overcurrent heating effect on the generator approaches the thermal damage point of the unit, protector switches the excitation system off, opens the generator disconnect device, and shuts down the generator set.
4. Senses clearing of a fault by other overcurrent devices and controls recovery of rated voltage to avoid overshoot.

2.07 GENERATOR, EXCITER, AND VOLTAGE REGULATOR

A. Comply with NEMA MG 1.

B. Drive: Generator shaft shall be directly connected to engine shaft. Exciter shall be rotated integrally with generator rotor.

C. Electrical Insulation: Class H or Class F.

D. Stator-Winding Leads: Brought out to terminal box to permit future reconnection for other voltages if required.

E. Construction shall prevent mechanical, electrical, and thermal damage due to vibration, overspeed up to 125 percent of rating, and heat during operation at 110 percent of rated capacity.

F. Enclosure: Dripproof.

G. Voltage Regulator: Solid-state type, separate from exciter, providing performance as specified.

1. Adjusting rheostat on control and monitoring panel shall provide plus or minus 5 percent adjustment of output-voltage operating band.

H. Windings: Two-thirds pitch stator winding and fully linked amortisseur winding.

I. Subtransient Reactance: 12 percent, maximum.

2.08 OUTDOOR GENERATOR-SET ENCLOSURE

A. Description: Vandal-resistant, insulated, sound attenuated, weatherproof steel housing, wind resistant up to 100 mph. Multiple panels shall be lockable and provide adequate access to components requiring maintenance. Panels shall be removable by one person without tools. Instruments and control shall be mounted within enclosure. Sound level shall not exceed 78dB measured 23 ft. from any side.

2.09 VIBRATION ISOLATION DEVICES

A. Vibration isolation shall be provided between engine and frame and between generator and frame.

2.10 FINISHES

A. Indoor and Outdoor Enclosures and Components: Manufacturer's standard beige color finish over corrosion-resistant pretreatment and compatible primer.

2.11 SOURCE QUALITY CONTROL

A. Prototype Testing: Factory test engine-generator set using same engine model, constructed of identical or equivalent components and equipped with identical or equivalent accessories.

1. Tests: Comply with NFPA 110, Level 1 Energy Converters and with IEEE 115.

B. Project-Specific Equipment Tests: Before shipment, factory test engine-generator set and other system components and accessories manufactured specifically for this Project. Perform tests at rated load and power factor. Include the following tests:

1. Test components and accessories furnished with installed unit that are not identical to those on tested prototype to demonstrate compatibility and reliability.
2. Full load run.
3. Maximum power.
4. Voltage regulation.
5. Transient and steady-state governing.
6. Single-step load pickup.
7. Safety shutdown.
8. Provide 14 days' advance notice of tests and opportunity for observation of tests by Owner's representative.
9. Report factory test results within 10 days of completion of test.

PART 3 - EXECUTION

3.01 EXAMINATION

A. Examine areas, equipment bases, and conditions, with Installer present, for compliance with requirements for installation and other conditions affecting packaged engine-generator performance.

B. Examine roughing-in of piping systems and electrical connections. Verify actual locations of connections before packaged engine-generator installation.

C. Proceed with installation only after unsatisfactory conditions have been corrected.

3.02 INSTALLATION

A. Comply with packaged engine-generator manufacturers' written installation and alignment instructions and with NFPA 110.

B. Install packaged engine generator to provide access, without removing connections or accessories, for periodic maintenance.

C. Anchor packaged engine generator to concentrate pad with 5/8” diameter anchor bolts.

D. Electrical Wiring: Install electrical devices furnished by equipment manufacturers but not specified to be factory mounted.

3.03 CONNECTIONS

A. Connect fuel, cooling-system, and exhaust-system piping adjacent to packaged engine generator to allow service and maintenance.

B. Connect engine exhaust pipe to engine with flexible connector.

C. Ground equipment according to Division 26 Section "Grounding and Bonding for Electrical Systems."

D. Connect wiring according to Division 26 Section "Low-Voltage Electrical Power Conductors and Cables."

3.04 IDENTIFICATION

A. Identify system components according to Division 26 Section "Identification for Electrical Systems."

3.05 FIELD QUALITY CONTROL

A. Manufacturer's Field Service: Engage a factory-authorized service representative to inspect, test, and adjust components, assemblies, and equipment installations, including connections. Report results in writing.

B. Tests and Inspections:

1. Perform tests recommended by manufacturer and each electrical test and visual and mechanical inspection (except those indicated to be optional)] for "AC Generators and for Emergency Systems" specified in NETA Acceptance Testing Specification. Certify compliance with test parameters.

2. NFPA 110 Acceptance Tests: Perform tests required by NFPA 110 that are additional to those specified here including, but not limited to, single-step full-load pickup test. Perform on-site load bank tests per NFPA 110. Fuel will be supplied by Owner.

3. Battery Tests: Equalize charging of battery cells according to manufacturer's written instructions. Record individual cell voltages.

   a. Measure charging voltage and voltages between available battery terminals for full-charging and float-charging conditions. Check electrolyte level and specific gravity under both conditions.

   b. Test for contact integrity of all connectors. Perform an integrity load test and a capacity load test for the battery.

   c. Verify acceptance of charge for each element of the battery after discharge.

   d. Verify that measurements are within manufacturer's specifications.

4. Battery-Charger Tests: Verify specified rates of charge for both equalizing and float-charging conditions.

5. System Integrity Tests: Methodically verify proper installation, connection, and integrity of each element of engine-generator system before and during system operation. Check for air, exhaust, and fluid leaks.

6. Voltage and Frequency Transient Stability Tests: Use recording oscilloscope to measure voltage and frequency transients for 50 and 100 percent step-load increases and decreases, and verify that performance is as specified.

C. Coordinate tests with tests for transfer switches and run them concurrently.

D. Test instruments shall have been calibrated within the last 12 months, traceable to standards of NIST, and adequate for making positive observation of test results. Make calibration records available for examination on request.

E. Leak Test: After installation, charge system and test for leaks. Repair leaks and retest until no leaks exist.

F. Operational Test: After electrical circuitry has been energized, start units to confirm proper motor rotation and unit operation.

G. Test and adjust controls and safeties. Replace damaged and malfunctioning controls and equipment.

H. Remove and replace malfunctioning units and retest as specified above.

I. Retest: Correct deficiencies identified by tests and observations and retest until specified requirements are met.

J. Report results of tests and inspections in writing. Record adjustable relay settings and measured insulation resistances, time delays, and other values and observations. Attach a label or tag to each tested component indicating satisfactory completion of tests.

K. Simulated Power Outage: After substantial completion, simulate a utility power outage and verify operation.

3.06 DEMONSTRATION

A. Engage a factory-authorized service representative to train Owner's maintenance personnel to adjust, operate, and maintain packaged engine generators. Refer to Division 01 Section "Demonstration and Training." Provide a minimum of 2 hours training.

END OF SECTION 26 32 13

SECTION 26 36 23
AUTOMATIC TRANSFER SWITCH

PART 1 - GENERAL

1.01 SCOPE

A. Furnish and install the low voltage automatic transfer switches having the ratings, features/accessories and enclosures as specified herein and as shown on the contract drawings.

1.02 RELATED SECTIONS

A. All Division 26 sections.

1.03 REFERENCES

A. The automatic transfer switches and all components shall be designed, manufactured and tested in accordance with the latest applicable standards of UL and NEMA as follows:

1. UL 1008 – Transfer Switches
2. UL 991 - Tests for Safety-Related Controls Employing Solid-State Devices
3. NFPA 70 – National Electrical Code
4. NFPA 99 – Essential Electrical Systems of Health Care Facilities
5. NFPA 110 – Emergency and Standby Power Systems
6. NEMA ICS 10 – AC Transfer Switch Equipment
7. IEEE 446 – Recommended Practice for Emergency and Standby Power Systems

1.04 SUBMITTALS – FOR REVIEW/APPROVAL

A. The following information shall be submitted to the Engineer:

1. Front view and plan view of the assembly
2. Schematic diagram
3. Conduit space locations within the assembly.
4. Assembly ratings including:
   a. Withstand and Closing rating
   b. Voltage
   c. Continuous current rating
   d. Short-Time rating if applicable
   e. Short-circuit rating if ordered with integral protection
5. Cable terminal sizes
6. Product Data Sheets.

B. Where applicable, the following additional information shall be submitted to the Engineer:

1. Busway connection
2. Connection details between close-coupled assemblies
3. Composite front view and plan view of close-coupled assemblies

1.05 SUBMITTALS – FOR CONSTRUCTION

A. The following information shall be submitted for record purposes:

1. Final as-built drawings and information for items listed in section 1.04
2. Wiring diagrams
3. Certified production test reports
4. Installation information
5. Seismic certification as specified

B. The final (as-built) drawings shall include the same drawings as the construction drawings and shall incorporate all changes made during the manufacturing process.

1.06 QUALIFICATIONS

A. The manufacturer of the assembly shall be the manufacturer of the major components within the assembly.

B. For the equipment specified herein, the manufacturer shall be ISO 9001 or 9002 certified.

C. The manufacturer of this equipment shall have produced similar electrical equipment for a minimum period of five (5) years. When requested by the Engineer, an acceptable list of installations with similar equipment shall be provided demonstrating compliance with this requirement.

D. Seismic Performance: Transfer switches shall withstand the effects of earthquake motions determined according to SEI/ASCE 7.

1. The term "withstand" means "the unit will remain in place without separation of any parts from the device when subjected to the seismic forces specified and the unit will be fully operational after the seismic event."

1.07 REGULATORY REQUIREMENTS

A. Provide a certificate of compliance with UL 1008 for the transfer switches furnished under this section.

1.08 DELIVERY, STORAGE AND HANDLING

A. Equipment shall be handled and stored in accordance with manufacturer’s instructions. One (1) copy of these instructions shall be included with the equipment at time of shipment.

1.09 FIELD MEASUREMENTS

1.10 OPERATION AND MAINTENANCE MANUALS

A. Equipment operation and maintenance manuals shall be provided with each assembly shipped, and shall include instruction leaflets and instruction bulletins for the complete assembly and each major component.

PART 2 - PRODUCTS

2.01 MANUFACTURERS

A. Eaton

B. ASCO

C. General Electric

D. Siemens

E. The listing of specific manufacturers above does not imply acceptance of their products that do not meet the specified ratings, features and functions. Manufacturers listed above are not relieved from meeting these specifications in their entirety. Products in compliance with the specification and manufactured by others not named will be considered only if pre-approved by the engineer ten (10) days prior to bid date.

2.02 CONSTRUCTION

A. Power Switching Device

1. Switching devices for transfer switches shall be Contactor type mechanisms. All Contactors shall be UL listed for application in their intended enclosures for 100% of their continuous ampere rating.

2. Each transfer switch shall be positively interlocked both mechanically and electrically to prevent simultaneous closing of both sources under either automatic or manual operation. Main contacts shall be mechanically held in position in both normal and emergency positions.

B. The transfer switch withstand and closing rating SHALL exceed the available fault current indicated on the Drawings, minimum of 14kA at 480 volts.

C. Transfer switches shall be open delayed transition and operate with a time delay in the neutral position, adjustable from 0 to 120 seconds.

D. The automatic transfer switch shall be of double throw construction operated by a reliable electrical mechanism momentarily energized. There shall be a direct mechanical coupling to facilitate transfer in 6 cycles or less.

E. Contactors or components thereof not specifically designed, as an automatic transfer switch will not be acceptable.

F. The switching panel shall consist of a separate control or transformer panel. Control power for all transfer operations shall be derived from the line side of the source to which the load is being transferred. The transformer shall be multi-tap for ease of voltage adjustment in the field.

G. Transfer switches will be supplied with a manual-operating handle. Manual operation shall only be performed with the switch de-energized.

H. On transfer switches requiring a fourth pole for switching the neutral, the neutral shall be identical to the other power poles. Switched neutral poles which are add-on or overlap, or that are not capable of breaking full rated load current are not acceptable.

I. On transfer switches requiring a solid neutral, the neutral shall be fully rated.

J. Seismic Requirements: Fabricate and test transfer switches according to IEEE 344 to withstand seismic forces defined in Division 26 Section "Vibration and Seismic Controls for Electrical Systems."

2.03 MICROPROCESSOR LOGIC

A. The microprocessor-based transfer switch controller shall be hardened against potential problems from transients and surges. Operation of the transfer switch and monitoring of both sources shall be managed by the controller.

B. The automatic transfer switch controllers shall meet or exceed the following standards in addition to the basic switch standards:

1. IEC 61000-4-2 - EMC Testing and Measurement Techniques - Electrostatic Discharge Immunity Test
2. IEC 61000-4-3 - EMC Testing and Measurement Techniques - Radio-frequency, Electromagnetic Field Immunity Test
3. IEC 61000-4-4 - EMC Testing and Measurement Techniques - Electrical Fast Transient/Burst Immunity Test
4. IEC 61000-4-5 - EMC Testing and Measurement Techniques - Surge Immunity Test
5. IEC 61000-4-6 - EMC Testing and Measurement Techniques - Immunity to Conducted Disturbances, Induced by Radio-frequency Fields
6. IEC 61000-4-11 - EMC Testing and Measurement Techniques - Voltage Dips, Short Interrupts and Voltage Variations Immunity Tests
7. CISPR11, Class B - Industrial, Scientific and Medical Radio-frequency Equipment - Electromagnetic Disturbance Characteristics - Limits and Methods of Measurement
8. FCC Part 15, Subpart B, Class B

2.04 ENCLOSURE

A. Each transfer switch shall be provided in a NEMA 12 enclosure suitable for use in environments indicated in the drawings.

B. Enclosure shall be painted with the manufacturer’s standard light gray ANSI 61paint.

2.05 CONTROLLER DISPLAY AND KEYPAD

A. The microprocessor-based controller display shall be UV resistant and include a 2-line, 16 character, backlit LCD display. The controller shall be capable of displaying transfer

switch status, parameters, and diagnostic data. All set point parameters shall be password protected and programmable using the controller keypad or remotely using serial port access.

B. The microprocessor-based controller shall include a mimic bus display consisting of four (4) individual LED's (3mm) for indicating the following:

1. Availability status of NORMAL source
2. Availability status of EMERGENCY source
3. Connection status of NORMAL source
4. Connection status of EMERGENCY source

2.06 VOLTAGE AND FREQUENCY SENSING

A. The controller shall have a voltage range of 0-790 volts (50/60 Hz) and an accuracy of +/- 1% of nominal input voltage and a frequency range of 40-70 Hz and an accuracy of +/- .3 Hz.

B. Voltage and frequency dropout and pickup parameters are set as a percentage of the nominal voltage as indicated in the table below.

Setpoint	Sources	Dropout	Pickup
Undervoltage	Source1 and 2	78 – 97%	(DO + 2%) - 99%
Overvoltage	Source 1 and 2	105 – 110%	103% - (DO – 2%)
Underfrequency	Source 1 and 2	90 – 97%	(DO + 1Hz) – 99%
Overfrequency	Source 1 and 2	103 – 105%	101% - (DO – 1Hz)
Voltage Unbalance	Source 1 and 2	5 – 20%	(UNBAL DO% - 2) – 3%

C. The normal and emergency sources shall include phase reversal protection. The preferred rotation is programmable as ABC or CBA.

2.07 TIME DELAYS

A. A time delay shall be provided on transfer to EMERGENCY source, adjustable from 0 to 1800 seconds.

B. A time delay shall be provided to override a momentary power outage or voltage fluctuation, adjustable from 0 to 120 seconds.

C. A time delay shall be provided on retransfer from EMERGENCY source to NORMAL source, adjustable from 0 to 1800 seconds.

D. A time delay shall be provided after retransfer that allows the generator to run unloaded prior to shutdown, adjustable form 0 to 1800 seconds.

E. A time delay shall be provided for engine failure to start, fixed setting of 6 seconds.

F. A pre-transfer time delay output adjustable from 0-120 seconds. The contact shall be a form-c contact rated for 10-Amp at 250-Vac and 10-Amp at 30-Vdc.

G. All delays shall be field adjustable from the microprocessor-based controller without the use of special tools.

2.08 ADDITIONAL FEATURES

A. One Form A contact for closure of the Generator start circuit. The contacts shall be of silver alloy with gold flashing. The contacts shall be rated for 5-Amp at 250-Vac and 5-Amp at 30-Vdc.

B. Programmable Engine Exerciser, selectable as disabled, 7, 14, or 28 day interval, adjustable 0-600 minutes, load or no load with Failsafe

C. The controller shall include a keypad pushbutton to initiate a system test.

D. The controller shall include a keypad pushbutton to bypass the time delay on transfer to emergency and the time delay on retransfer to normal.

E. The controller shall include a terminal input to accept a remote contact which closes to initiate a transfer to source 2. This feature shall be failsafe and an automatic retransfer shall occur in the event that source 2 power is lost.

F. The controller shall include a terminal input to accept a remote contact which opens to inhibit transfer to source 2.

G. One Form C auxiliary contact to indicate Source 1 position and one Form C contact to indicate source 2 position. The contacts shall be rated for 10-Amp, 1/3-Horsepower at 250-Vac and 10-Amp at 30-Vdc.

H. One Form C contact for NORMAL Source Available. The contacts shall be rated for 10-Amp, 1/3-Horsepower at 250-Vac and 10-Amp at 30-Vdc.

I. One Form C contact for EMERGENCY Source Available. The contacts shall be rated for 10-Amp, 1/3-Horsepower at 250-Vac and 10-Amp at 30-Vdc.

J. Historical Data Storage to include:

1. Engine Run Time
2. NORMAL source Available time
3. EMERGENCY source Available time
4. NORMAL source Connected time
5. EMERGENCY source Connected time
6. LOAD Energized Time
7. Number of Transfers
8. Date, Time and Reason for Last Sixteen (16) transfers
9. Monitor Mode Event
10. Fail Safe Event
11. Aborted Test

2.09 OPTIONAL ACCESSORIES

A. Non-Automatic Control: Provide a 2-Position Selector Switch, maintained contact, marked: “Automatic” and “Non-Automatic”. The transfer switch shall be transferred by actuating a two position maintained selector switch labeled “Source 1”and “Source 2”. A 30mm pilot light shall be provided labeled “Not in Automatic”.

B. Manual Retransfer Control: The ATS shall remain connected to the emergency source after the normal source becomes available until a momentary pushbutton contact closure signal is received to initiate the retransfer. Should a failure of the emergency source occur while waiting for the manual return, the re-transfer proceeds automatically.

1. Control Functions

a. Control functions shall be password protected and shall include:

i. Initiate engine test.

ii. Initiate a failsafe transfer to source 2.

iii. Initiate manual retransfer.

iv. Alarm silence

2. Alarms

a. Remote Annunciator shall provide audible and visual alarm when on source 2.

b. Visual alarm upon failure of communication link.

3. Mounting: Flush, modular, unless otherwise indicated.

4. Communications capability to be compatible with ATS controller.

PART 3 - EXAMINATION

3.01 FACTORY TESTING

A. The following standard factory tests shall be performed on the equipment provided under this section. All tests shall be in accordance with the latest version of UL and NEMA standards.

1. Insulation check to ensure the integrity of insulation and continuity of the entire system

2. Visual inspection to ensure that the switch matches the specification requirements and to verify that the fit and finish meet quality standards

3. Mechanical tests to verify that the switch's power sections are free of mechanical hindrances

4. Electrical tests to verify the complete electrical operation of the switch and to set up time delays and voltage sensing settings of the logic

B. The manufacturer shall provide a certified copy of factory test reports.

C. Transfer switch shall include a label indicating order number, catalog number and date

3.02 INSTALLATION

A. The Contractors shall install all equipment per the manufacturer's recommendations and the contract drawings

B. All necessary hardware to secure the assembly in place shall be provided by the contractor

3.03 FIELD QUALITY CONTROL

A. Provide the services of a qualified factory-trained manufacturer's representative to assist the contractor in installation and start-up of the equipment specified under this section for a period of one (1) working days. The manufacturer's representative shall provide technical direction and assistance to the contractor in general assembly of the equipment, connections and adjustments, and testing of the assembly and components contained therein.

3.04 MANUFACTURER'S CERTIFICATION

A. A qualified factory-trained manufacturer's representative shall certify in writing that the equipment has been installed, adjusted and tested in accordance with the manufacturer's recommendations.

B. The Contractor shall provide a copy of the manufacturer's representative's certification.

3.05 TRAINING

A. The Manufacturer's qualified representative shall conduct a training session for up to five (5) owner's representatives for one (1) normal workday at a jobsite location determined by the owner. The training program shall consist of the instruction on the operation of the transfer switch and the major components within the assembly.

3.06 FIELD SERVICE ORGANIZATION

A. The manufacturer of the ATS shall also have a national service organization that is available throughout the contiguous United States and is available on call 24 hours a day, 365 days a year.

END OF SECTION 26 36 23

SECTION 26 51 19
LED INTERIOR LIGHTING

PART 1 - GENERAL

1.01 RELATED DOCUMENTS

A. Drawings and general provisions of the Contract, including General and Supplementary Conditions and Division 01 Specification Sections, apply to this Section.

1.02 SUMMARY

A. Section Includes:

1. Interior solid-state luminaires that use LED technology.

2. Lighting fixture supports.

1.03 DEFINITIONS

A. CCT: Correlated color temperature.

B. CRI: Color Rendering Index.

C. Fixture: See "Luminaire."

D. IP: International Protection or Ingress Protection Rating.

E. LED: Light-emitting diode.

F. Lumen: Measured output of lamp and luminaire, or both.

G. Luminaire: Complete lighting unit, including lamp, reflector, and housing.

1.04 ACTION SUBMITTALS

A. Product Data: For each type of product.

1. Arrange in order of luminaire designation.

2. Include data on features, accessories, and finishes.

3. Include physical description and dimensions of luminaires.

4. Include emergency lighting units, including batteries and chargers.

5. Include life, output (lumens, CCT, and CRI), and energy efficiency data.

6. Include compliance of LED Luminaries with IES LM-79 and IES LM-80.

B. Shop Drawings: For nonstandard or custom luminaires.

1. Include plans, elevations, sections, and mounting and attachment details.

2. Include details of luminaire assemblies. Indicate dimensions, weights, loads, required clearances, method of field assembly, components, and location and size of each field connection.

3. Include diagrams for power, signal, and control wiring.

1.05 INFORMATIONAL SUBMITTALS

A. Qualification Data: For testing laboratory providing photometric data for luminaires.

1.06 CLOSEOUT SUBMITTALS

A. Operation and Maintenance Data: For luminaires and lighting systems to include in operation and maintenance manuals.

1. Provide a list of all lamp types used on Project; use ANSI and manufacturers' codes.

1.07 QUALITY ASSURANCE

A. Electrical Components, Devices, and Accessories: Listed and labeled as defined in NFPA 70, Article 100, by a testing agency acceptable to authorities having jurisdiction, and marked for intended use.

B. Comply with NFPA 70.

C. Luminaire Photometric Data Testing Laboratory Qualifications: Luminaire manufacturer's laboratory that is accredited under the NVLAP for Energy Efficient Lighting Products.

1.08 DELIVERY, STORAGE, AND HANDLING

A. Protect finishes of exposed surfaces by applying a strippable, temporary protective covering before shipping.

1.09 WARRANTY

A. Warranty: Manufacturer and Installer agree to repair or replace components of luminaires that fail in materials or workmanship within specified warranty period.

B. Warranty Period: 3 year(s) from date of Substantial Completion.

PART 2 - PRODUCTS

2.01 LUMINAIRE REQUIREMENTS

A. Electrical Components, Devices, and Accessories: Listed and labeled as defined in NFPA 70, by a qualified testing agency, and marked for intended location and application.

B. NRTL Compliance: Luminaires for hazardous locations shall be listed and labeled for indicated class and division of hazard by an NRTL.

C. FM Global Compliance: Luminaires for hazardous locations shall be listed and labeled for indicated class and division of hazard by FM Global.

D. Recessed Fixtures: Comply with NEMA LE 4.

E. Bulb shape complying with ANSI C79.1.

F. Lamp base complying with ANSI C81.61.

G. Compliance with ANSI C78.377 "Specifications for the Chromaticity of Solid State Lighting Products".

H. Compliance with UL 8750 "Safety Standard for Light Emitting Diode (LED) Equipment for Use in Lighting Products".

I. Compliance with LM-79 "Electrical and Photometric Measurements of Solid-State Lighting Products" and LM-80 "Measuring Lumen Maintenance of LED Light Sources".

J. CRI of minimum 80 or as specified on the construction documents.

K. Minimum allowable efficacy of 60 lumens per watt for downlights, 90 lumens per watt minimum for other LED fixtures or as specified on the construction documents schedules.

L. Rated lamp life of 50,000 minimum hours or as specified on the construction documents schedules, whichever is more stringent.

M. Dimmable from 100 percent to 10 percent.

N. RoHS or equivalent compliance.

O. Fully serviceable and upgradeable LED light engine.

P. LED Driver/Power Supply:

1. Integral high efficiency driver with power supply of 120V-277V input at 60HZ.

2. Power factor greater than 0.9 at full load.

3. THD at < 20 percent.

4. Drive current at 1000ma maximum.

5. Class 2 power supply.

6. Capable of being serviced from above or through the aperture.

7. Protected from overload and short circuit conditions.

2.02 MATERIALS

A. Metal Parts:

1. Free of burrs and sharp corners and edges.

2. Sheet metal components shall be steel unless otherwise indicated.

3. Form and support to prevent warping and sagging.

B. Doors, Frames, and Other Internal Access: Smooth operating, free of light leakage under operating conditions, and designed to permit relamping without use of tools. Designed to prevent doors, frames, lenses, diffusers, and other components from falling accidentally during relamping and when secured in operating position.

C. Diffusers and Globes:

1. Acrylic Diffusers: One hundred percent virgin acrylic plastic, with high resistance to yellowing and other changes due to aging, exposure to heat, and UV radiation.

2. Glass: Annealed crystal glass unless otherwise indicated.

3. Lens Thickness: At least 0.125 inch minimum unless otherwise indicated.

2.03 METAL FINISHES

A. Variations in finishes are unacceptable in the same piece. Variations in finishes of adjoining components are acceptable if they are within the range of approved Samples and if they can be and are assembled or installed to minimize contrast.

2.04 LUMINAIRE FIXTURE SUPPORT COMPONENTS

A. Comply with requirements in Section 260529 "Hangers and Supports for Electrical Systems" for channel and angle iron supports and nonmetallic channel and angle supports.

B. Single-Stem Hangers: 1/2-inch steel tubing with swivel ball fittings and ceiling canopy. Finish same as luminaire.

C. Wires: ASTM A 641/A 641 M, Class 3, soft temper, zinc-coated steel, 12 gage.

D. Wires for Humid Spaces: ASTM A 580/A 580M, Composition 302 or 304, annealed stainless steel, 12 gage.

E. Rod Hangers: 3/16-inch minimum diameter, cadmium-plated, threaded steel rod.

F. Hook Hangers: Integrated assembly matched to luminaire, line voltage, and equipment with threaded attachment, cord, and locking-type plug.

G. Aircraft Cable Support: Use cable, anchorages, and intermediate support recommended by fixture manufacturer.

PART 3 - EXECUTION

3.01 EXAMINATION

A. Examine substrates, areas, and conditions, with Installer present, for compliance with requirements for installation tolerances and other conditions affecting performance of the Work.

B. Examine roughing-in for luminaire to verify actual locations of luminaire and electrical connections before fixture installation. Proceed with installation only after unsatisfactory conditions have been corrected.

3.02 INSTALLATION

A. Comply with NECA 1.

B. Install luminaires level, plumb, and square with ceilings and walls unless otherwise indicated.

C. Surface mounted lighting fixtures shall be attached to the ceiling system with positive clamping devices that completely surround the supporting members. Safety wires shall be attached between the clamping device and the adjacent ceiling hanger or to the structure above. In no case shall the fixture exceed the design carrying capacity of the supporting members.

1. directly from the structure above by approved hangers.

D. Comply with requirements in Section 260519 "Low-Voltage Electrical Power Conductors and Cables" for wiring connections.

3.03 IDENTIFICATION

A. Identify system components, wiring, cabling, and terminals. Comply with requirements for identification specified in Section 260553 "Identification for Electrical Systems."

3.04 FIELD QUALITY CONTROL

A. Perform the following tests and inspections:

1. Operational Test: After installing luminaires, switches, and accessories, and after electrical circuitry has been energized, test units to confirm proper operation.

2. Test for Emergency Lighting: Interrupt power supply to demonstrate proper operation. Verify transfer from normal power to battery power and retransfer to normal.

B. Luminaire will be considered defective if it does not pass operation tests and inspections.

END OF SECTION 26 51 19

SECTION 26 52 19
EMERGENCY AND EXIT LIGHTING

PART 1 - GENERAL

1.01 RELATED DOCUMENTS

A. Drawings and general provisions of the Contract, including General and Supplementary Conditions and Division 01 Specification Sections, apply to this Section.

1.02 SUMMARY

A. Section Includes:

1. Emergency lighting units.
2. Exit signs.
3. Luminaire supports.

1.03 DEFINITIONS

A. CCT: Correlated color temperature.

B. CRI: Color Rendering Index.

C. Emergency Lighting Unit: A lighting unit with internal or external emergency battery powered supply and the means for controlling and charging the battery and unit operation.

D. Fixture: See "Luminaire" Paragraph.

E. Lumen: Measured output of lamp and luminaire, or both.

F. Luminaire: Complete lighting unit, including lamp, reflector, and housing.

1.04 ACTION SUBMITTALS

A. Product Data: For each type of emergency lighting unit, exit sign, and emergency lighting support.

1. Include data on features, accessories, and finishes.
2. Include physical description of the unit and dimensions.
3. Battery and charger for light units.
4. Include life, output of luminaire (lumens, CCT, and CRI), and energy-efficiency data.
5. Include photometric data and adjustment factors based on laboratory tests, complying with IES LM-45, for each luminaire type.

a. Manufacturers' Certified Data: Photometric data certified by manufacturer's laboratory with a current accreditation under the National Voluntary Laboratory Accreditation Program for Energy Efficient Lighting Products.

B. Shop Drawings: For nonstandard or custom luminaires.

1. Include plans, elevations, sections, and mounting and attachment details.

2. Include details of equipment assemblies. Indicate dimensions, weights, loads, required clearances, method of field assembly, components, and location and size of each field connection.

3. Include diagrams for power, signal, and control wiring.

1.05 INFORMATIONAL SUBMITTALS

A. Qualification Data: For testing laboratory providing photometric data for luminaires.

B. Product Certificates: For each type of luminaire.

C. Manufacturer.

1. Basis for Certification: Indicate whether withstand certification is based on actual test of assembled components or on calculation.

2. Dimensioned Outline Drawings of Equipment Unit: Identify center of gravity and locate and describe mounting and anchorage provisions.

3. Detailed description of equipment anchorage devices on which the certification is based and their installation requirements.

D. Sample Warranty: For manufacturer's warranty.

1.06 CLOSEOUT SUBMITTALS

A. Operation and Maintenance Data: For luminaires and lighting systems to include in emergency, operation, and maintenance manuals.

1. Provide a list of all lamp types used on Project; use ANSI and manufacturers' codes.

1.07 MAINTENANCE MATERIAL SUBMITTALS

A. Furnish extra materials that match products installed and that are packaged with protective covering for storage and identified with labels describing contents.

1. Lamps, LED Modules and Drivers: 1 percent of each type and rating installed. Furnish at least one of each type.

2. Diffusers and Lenses: 2 percent of each type and rating installed. Furnish at least one of each type.

3. Globes and Guards: 2 percent of each type and rating installed. Furnish at least one of each type.

1.08 QUALITY ASSURANCE

A. Luminaire Photometric Data Testing Laboratory Qualifications: Luminaire manufacturer's laboratory that is accredited under the National Volunteer Laboratory Accreditation Program for Energy Efficient Lighting Products.

B. FM Global Compliance: Luminaires for hazardous locations shall be listed and labeled for indicated class and division of hazard by FM Global.

1.09 DELIVERY, STORAGE, AND HANDLING

A. Protect finishes of exposed surfaces by applying a strippable, temporary protective covering before shipping.

1.10 WARRANTY

A. Warranty: Manufacturer and Installer agree to repair or replace components of luminaires that fail in materials or workmanship within specified warranty period.

1. Failures include, but are not limited to, the following:

a. Structural failures, including luminaire support components.

b. Faulty operation of luminaires and accessories.

c. Deterioration of metals, metal finishes and color retention, and other materials beyond normal weathering.

d. Led Modules or Driver failure.

2. Warranty Period: minimum 2 years from date of Substantial Completion.

PART 2 - PRODUCTS

2.01 PERFORMANCE REQUIREMENTS

1. Flame-retardant, high-impact housing with snap-fit design components with LED lamps;

2. Universal J-box pattern;

3. Track & swivel arrangement for full range of lamp direction adjustment;

2.02 GENERAL REQUIREMENTS FOR EMERGENCY LIGHTING

A. Electrical Components, Devices, and Accessories: Listed and labeled as defined in NFPA 70, by a qualified testing agency, and marked for intended location and application.

B. NRTL Compliance: Fabricate and label emergency lighting units, exit signs, and batteries to comply with UL 924.

C. Comply with NFPA 70 and NFPA 101.

D. Comply with NEMA LE 4 for recessed luminaires.

E. Comply with UL 1598 for fluorescent luminaires.

F. Lamp Base: Comply with ANSI C81.61.

G. Bulb Shape: Complying with ANSI C79.1.

H. Internal Type Emergency Power Unit: Self-contained, modular, battery-inverter unit, factory mounted within luminaire body and compatible with ballast.

1. Emergency Connection: Operate fluorescent two lamp(s) or LED module(s) continuously upon loss of normal power (see Construction Document schedules for lumen output). Connect unswitched circuit to battery-inverter unit and switched circuit to luminaire ballast.
2. Operation: Relay automatically turns lamp on when power-supply circuit voltage drops to 80 percent of nominal voltage or below. Lamp automatically disconnects from battery when voltage approaches deep-discharge level. When normal voltage is restored, relay disconnects lamps from battery, and battery is automatically recharged and floated on charger.
3. Nightlight Connection: Operate lamp continuously.
4. Test Push-Button and Indicator Light: Visible and accessible without opening luminaire or entering ceiling space.
    a. Push Button: Push-to-test type, in unit housing, simulates loss of normal power and demonstrates unit operability.
    b. Indicator Light: LED indicates normal power on. Normal glow indicates trickle charge; bright glow indicates charging at end of discharge cycle.
5. Battery: Sealed, maintenance-free, nickel-cadmium type.
6. Charger: Fully automatic, solid-state, constant-current type with sealed power transfer relay.
7. Remote Test: Switch in handheld remote device aimed in direction of tested unit initiates coded infrared signal. Signal reception by factory-installed infrared receiver in tested unit triggers simulation of loss of its normal power supply, providing visual confirmation of either proper or failed emergency response.
8. Integral Self-Test: Factory-installed electronic device automatically initiates code-required test of unit emergency operation at required intervals. Test failure is annunciated by an integral audible alarm and a flashing red LED.

I. External Type: Self-contained, modular, battery-inverter unit, suitable for powering one or more lamps, remote mounted from luminaire.
1. Emergency Connection: Emergency Connection: Operate fluorescent two lamp(s) or LED module(s) continuously upon loss of normal power (see Construction Document Schedules for lumen output). Connect unswitched circuit to battery-inverter unit and switched circuit to luminaire ballast/driver.
2. Operation: Relay automatically turns lamp on when power-supply circuit voltage drops to 80 percent of nominal voltage or below. Lamp automatically disconnects from battery when voltage approaches deep-discharge level. When normal voltage is restored, relay disconnects lamps from battery, and battery is automatically recharged and floated on charger.
3. Nightlight Connection: Operate lamp in a remote luminaire continuously.

4. Battery: Sealed, maintenance-free, nickel-cadmium type.
5. Charger: Fully automatic, solid-state, constant-current type.
6. Housing: NEMA 250, Type 1 enclosure listed for installation inside, on top of, or remote from luminaire. Remote assembly shall be located no less than half the distance recommended by the emergency power unit manufacturer, whichever is less.
7. Test Push Button: Push-to-test type, in unit housing, simulates loss of normal power and demonstrates unit operability.
8. LED Indicator Light: Indicates normal power on. Normal glow indicates trickle charge; bright glow indicates charging at end of discharge cycle.
9. Integral Self-Test: Factory-installed electronic device automatically initiates code-required test of unit emergency operation at required intervals. Test failure is annunciated by an integral audible alarm and a flashing red LED.

2.03 MATERIALS

A. Metal Parts:
   1. Free of burrs and sharp corners and edges.
   2. Sheet metal components shall be steel unless otherwise indicated.
   3. Form and support to prevent warping and sagging.

B. Doors, Frames, and Other Internal Access:
   1. Smooth operating, free of light leakage under operating conditions.
   2. Designed to permit relamping without use of tools.
   3. Designed to prevent doors, frames, lenses, diffusers, and other components from falling accidentally during relamping and when secured in operating position.

2.04 METAL FINISHES

A. Appearance of Finished Work: Noticeable variations in same piece are not acceptable. Variations in appearance of adjoining components are acceptable if they are within the range of approved Samples and are assembled or installed to minimize contrast.

2.05 LUMINAIRE SUPPORT COMPONENTS

A. Support Wires: ASTM A 641/A 641M, Class 3, soft temper, zinc-coated steel, 12 gage (2.68 mm).

2.06 MANUFACTURER

A. Emergency lighting unit shall be a Lithonia® Model EU2C-M6

PART 3 - EXECUTION

3.01 EXAMINATION

A. Examine substrates, areas, and conditions, with Installer present, for compliance with requirements for conditions affecting performance of luminaires.

B. Examine roughing-in for luminaire to verify actual locations of luminaire and electrical connections before luminaire installation.

C. Examine walls, floors, roofs, and ceilings for suitable conditions where emergency lighting luminaires will be installed.

D. Proceed with installation only after unsatisfactory conditions have been corrected.

3.02 INSTALLATION

A. Comply with NECA 1.

B. Install luminaires level, plumb, and square with ceilings and walls unless otherwise indicated.

C. Install lamps in each luminaire.

D. Supports:

1. Sized and rated for luminaire weight.
2. Able to maintain luminaire position after cleaning and relamping.
3. Provide support for luminaire without causing deflection of ceiling or wall.
4. Luminaire mounting devices shall be capable of supporting a horizontal force of 100 percent of luminaire weight and vertical force of 400 percent of luminaire weight.

E. Flush-Mounted Luminaire Support:

1. Secured to outlet box.
2. Attached to ceiling structural members at four points equally spaced around circumference of luminaire.
3. Trim ring flush with finished surface.

F. Wall-Mounted Luminaire Support:

1. Attached to structural members in walls or attached to a minimum 20 gauge backing plate attached to wall structural members.
2. Do not attach luminaires directly to gypsum board.

G. Surface mounted lighting fixtures shall be attached to the ceiling system with positive clamping devices that completely surround the supporting members. Safety wires shall be attached between the clamping device and the adjacent ceiling hanger or to the structure above. In no case shall the fixture exceed the design carrying capacity of the supporting members.

H. Suspended Luminaire Support:

1. Pendants and Rods: Where longer than 48 inches (1200 mm), brace to limit swinging.

2. Stem-Mounted, Single-Unit Luminaires: Suspend with twin-stem hangers. Support with approved outlet box and accessories that hold stem and provide damping of luminaire oscillations. Support outlet box vertically to building structure using approved devices.
3. Continuous Rows of Luminaires: Use tubing or stem for wiring at one point and tubing or rod for suspension for each unit length of luminaire chassis, including one at each end.
4. Do not use ceiling grid as support for pendant luminaires. Connect support wires or rods to building structure.

I. Comply with requirements in Section 26 05 19 "Low-Voltage Electrical Power Conductors and Cables" for wiring connections.

3.03 IDENTIFICATION

A. Identify system components, wiring, cabling, and terminals. Comply with requirements for identification specified in Section 26 05 53 "Identification for Electrical Systems."

3.04 FIELD QUALITY CONTROL

A. Perform the following tests and inspections:
1. Test for Emergency Lighting: Interrupt power supply to demonstrate proper operation. Verify transfer from normal power to battery power and retransfer to normal.
2. Luminaire will be considered defective if it does not pass operation tests and inspections.
3. Prepare test and inspection reports.

3.05 STARTUP SERVICE

A. Perform startup service:
1. Charge emergency power units and batteries minimum of one hour and depress switch to conduct short-duration test.
2. Charge emergency power units and batteries minimum of 24 hours and conduct one-hour discharge test.

END OF SECTION 26 52 19

SECTION 26 56 19
LED EXTERIOR LIGHTING

PART 1 - GENERAL

1.01 RELATED DOCUMENTS

A. Drawings and general provisions of the Contract, including General and Supplementary Conditions and Division 01 Specification Sections, apply to this Section.

1.02 SUMMARY

A. Section Includes:

1. Exterior solid-state luminaires (including wall mounted) that are designed for and exclusively use LED lamp technology.
2. Luminaire supports.
3. Luminaire-mounted photoelectric relays or sensors.

B. Related Requirements:

1. Section 26 05 00 – Common Work Results for Electrical
2. Section 26 05 33 – Raceway and Boxes for Electrical Systems

1.03 DEFINITIONS

A. CCT: Correlated color temperature.

B. CRI: Color rendering index.

C. Fixture: See "Luminaire."

D. IP: International Protection or Ingress Protection Rating.

E. Lumen: Measured output of lamp and luminaire, or both.

F. Luminaire: Complete lighting unit, including lamp, reflector, and housing.

1.04 ACTION SUBMITTALS

A. Product Data: For each type of luminaire.

1. Arrange in order of luminaire designation.
2. Include data on features, accessories, and finishes.
3. Include physical description and dimensions of luminaire.
4. Lamps, include life, output (lumens, CCT, and CRI), and energy-efficiency data.
5. Include compliance of LED Luminaries with IES LM-79 and IES LM-80.
6. Wiring diagrams for power, control, and signal wiring.
7. Photoelectric relays.

8. Means of attaching luminaires to supports and indication that the attachment is suitable for components involved.
9. Include plans, elevations, sections, and mounting and attachment details.
10. Include details of luminaire assemblies. Indicate dimensions, weights, loads, required clearances, method of field assembly, components, and location and size of each field connection.
11. Include diagrams for power, signal, and control wiring.

B. Delegated-Design Submittal: For luminaire supports.

1. Include design calculations for luminaire supports and seismic restraints.

1.05 INFORMATIONAL SUBMITTALS

A. Qualification Data: For testing laboratory providing photometric data for luminaires.

B. Seismic Qualification Certificates: For luminaires, accessories, and components, from manufacturer.

1. Basis for Certification: Indicate whether withstand certification is based on actual test of assembled components or on calculation.
2. Dimensioned Outline Drawings of Equipment Unit: Identify center of gravity and locate and describe mounting and anchorage provisions.
3. Detailed description of equipment anchorage devices on which the certification is based and their installation requirements.

C. Product Certificates: For each type of the following:

1. Luminaire.
2. Photoelectric relay or sensors.

D. Sample warranty.

1.06 CLOSEOUT SUBMITTALS

A. Operation and Maintenance Data: For luminaires, photoelectric relays and related controls to include in operation and maintenance manuals.

1. Provide a list of all lamp types used on Project. Use ANSI and manufacturers' codes.
2. Provide a list of all photoelectric relay types and related controls used on Project; use manufacturers' codes.

1.07 MAINTENANCE MATERIAL SUBMITTALS

A. Furnish extra materials that match products installed and that are packaged with protective covering for storage and identified with labels describing contents.

1. LED Modules: For each type, provide 1 percent of the total quantity installed. Furnish at least one of each type.

2. LED Drivers: For each type, provide 1 percent of the total quantity installed. Furnish at least one of each type.
3. Glass, Acrylic, and Plastic Lenses, Covers, and Other Optical Parts: One for every 100 of each type and rating installed. Furnish at least one of each type.
4. Diffusers and Lenses: One for every 100 of each type and rating installed. Furnish at least one of each type.
5. Globes and Guards: One for every 20 of each type and rating installed. Furnish at least one of each type.

1.08 QUALITY ASSURANCE

A. Luminaire Photometric Data Testing Laboratory Qualifications: Provided by an independent agency, with the experience and capability to conduct the testing indicated, that is an NRTL as defined by OSHA in 29 CFR 1910.7, accredited under the NVLAP for Energy Efficient Lighting Products and complying with applicable IES testing standards.

B. Provide luminaires from a single manufacturer for each luminaire type.

C. Each luminaire type shall be binned within a three-step MacAdam Ellipse to ensure color consistency among luminaires.

1.09 DELIVERY, STORAGE, AND HANDLING

A. Protect finishes of exposed surfaces by applying a strippable, temporary protective covering prior to shipping.

1.10 FIELD CONDITIONS

A. Verify existing and proposed utility structures prior to the start of work associated with luminaire installation.

1.11 WARRANTY

A. Warranty: Manufacturer and Installer agree to repair or replace components of luminaires that fail in materials or workmanship within specified warranty period.

1. Failures include, but are not limited to, the following:
   a. Structural failures, including luminaire support components.
   b. Faulty operation of luminaires and accessories.
   c. Deterioration of metals, metal finishes and color retention, and other materials beyond normal weathering.
   d. LED Modules or Driver failure.
2. Warranty Period: 5 years from date of Substantial Completion.

PART 2 - PRODUCTS

2.01 PERFORMANCE REQUIREMENTS

1. Adjustable Lumen output of 2,150 lumen on “low” setting and 2,600 lumen on “high” setting, with a CRI of 80;
2. Switchable color temperature of:
    a. 3000K Warm White
    b. 4000K Cool White
    c. 5000K Daylight
3. Dusk to dawn photocell equipped;
4. Motion-sensing equipped with a 200° field of view;
5. Cast aluminum housing with polyester power coating specifically manufactured to operate outdoors;
6. LED lamp heads thermally isolated from the driver – promoting long service life;
7. Sealed lenses;
8. LED’s maintain 70% minimum output at 50,000 hours of service life

2.02 MANUFACTURER

A. Exterior floodlights shall be Lithonia® Model HGX LED 2RH ALO SWW2 120 PIR DDB or approved equal.

PART 3 - EXECUTION

3.01 EXAMINATION

A. Examine substrates, areas, and conditions, with Installer present, for compliance with requirements for installation tolerances and other conditions affecting performance of the Work.

B. Examine roughing-in for luminaire electrical conduit to verify actual locations of conduit connections before luminaire installation.

C. Examine walls, roofs, canopy ceilings and overhang ceilings for suitable conditions where luminaires will be installed.

D. Proceed with installation only after unsatisfactory conditions have been corrected.

3.02 GENERAL INSTALLATION REQUIREMENTS

A. Comply with NECA 1.

B. Use fastening methods and materials selected to resist seismic forces defined for the application and approved by manufacturer.

C. Fasten luminaire to structural support.

D. Supports:
    1. Sized and rated for luminaire weight.
    2. Able to maintain luminaire position after cleaning and relamping.

3. Support luminaires without causing deflection of finished surface.
4. Luminaire-mounting devices shall be capable of supporting a horizontal force of 100 percent of luminaire weight and a vertical force of 400 percent of luminaire weight.

E. Wall-Mounted Luminaire Support:
1. Attached to structural members in walls, attached to a minimum 1/8 inch (3 mm) backing plate attached to wall structural members.

F. Wiring Method: Install cables in raceways. Conceal raceways and cables.

G. Install luminaires level, plumb, and square with finished grade unless otherwise indicated. Install luminaires at height and aiming angle as indicated on Drawings.

H. Coordinate layout and installation of luminaires with other construction.

I. Adjust luminaires that require field adjustment or aiming. Include adjustment of photoelectric device to prevent false operation of relay by artificial light sources, favoring a north orientation.

J. Comply with requirements in Section 260519 "Low-Voltage Electrical Power Conductors and Cables" and 260533 "Raceways and Boxes for Electrical Systems" for wiring connections and wiring methods.

3.03 CORROSION PREVENTION

A. Aluminum: Do not use in contact with earth or concrete. When in direct contact with a dissimilar metal, protect aluminum by insulating fittings or treatment.

B. Steel Conduits: Comply with Section 260533 "Raceways and Boxes for Electrical Systems." In concrete foundations, wrap conduit with 0.010-inch (0.254-mm) thick, pipe-wrapping plastic tape applied with a 50 percent overlap.

3.04 FIELD QUALITY CONTROL

A. Inspect each installed luminaire for damage. Replace damaged luminaires and components.

B. Perform the following tests and inspections:
1. Operational Test: After installing luminaires, switches, and accessories, and after electrical circuitry has been energized, test units to confirm proper operation.
2. Verify operation of photoelectric controls.

C. Luminaire will be considered defective if it does not pass tests and inspections.

END OF SECTION 26 56 19

DIVISION 27

COMMUNICATIONS

SECTION 27 11 16
COMMUNICATIONS RACKS, FRAMES, AND ENCLOSURES

PART 1 - GENERAL

1.01 RELATED DOCUMENTS

A. Drawings and general provisions of the Contract, including General and Supplementary Conditions and Division 01 Specification Sections, apply to this Section.

1.02 SUMMARY

A. Section Includes:

1. 19-inch wall-mounted equipment cabinets.
2. Power strips.
3. Grounding.
4. Labeling.

B. Related Requirements:

1. Section 26 05 26 "Grounding and Bonding for Electrical Systems."
2. Section 26 05 33 "Raceways and Boxes for Electrical Systems."
3. Section 27 15 13 "Communications Copper Horizontal Cabling" for copper data cabling associated with system panels and devices.
4. Section 27 15 23 "Communications Optical Fiber Backbone Cabling" for optical-fiber data cabling associated with system panels and devices.

1.03 DEFINITIONS

A. Access Provider: An operator that provides a circuit path or facility between the service provider and user. An access provider can also be a service provider.

B. BICSI: Building Industry Consulting Service International.

C. LAN: Local area network.

D. RCDD: Registered communications distribution designer.

E. Service Provider: The operator of a telecommunications transmission service delivered through access provider facilities.

F. TGB: Telecommunications grounding bus bar.

G. TMGB: Telecommunications main grounding bus bar.

1.04 ACTION SUBMITTALS

A. Product Data: For each type of product.

1. Include construction details, material descriptions, dimensions of individual components and profiles, and finishes for equipment racks and cabinets.
2. Include rated capacities, operating characteristics, electrical characteristics, certifications, standards compliance, and furnished specialties and accessories.

B. Shop Drawings: For communications racks, frames, and enclosures. Include plans, elevations, sections, details, and attachments to other work.

1. Detail equipment assemblies and indicate dimensions, weights, loads, required clearances, method of field assembly, components, and location and size of each field connection.
2. Equipment Racks and Cabinets: Include workspace requirements and access for cable connections.
3. Grounding: Indicate location of TGB and its mounting detail showing standoff insulators and wall-mounting brackets.

1.05 INFORMATIONAL SUBMITTALS

A. Qualification Data: For Installer.

B. Seismic Qualification Data: Certificates, from manufacturer.

1. Basis for Certification: Indicate whether withstand certification is based on actual test of assembled components or on calculation.
2. Dimensioned Outline Drawings of Equipment Unit: Identify center of gravity and locate and describe mounting and anchorage provisions. Base certification on the maximum number of components capable of being mounted in each rack type. Identify components on which certification is based.
3. Detailed description of equipment anchorage devices on which the certification is based and their installation requirements.

1.06 QUALITY ASSURANCE

A. Installer Qualifications:

1. Experienced installers, certified by the manufacturer, with at least five years experience installing Category 6 cabling systems and fiber optic systems in accordance with TIA-568 standards.

PART 2 - PRODUCTS

2.01 PERFORMANCE REQUIREMENTS

A. Seismic Performance: Equipment shall withstand the effects of earthquake motions determined according to ASCE/SEI 7.

1. The term "withstand" means "the unit will remain in place without separation of any parts when subjected to the seismic forces specified and the unit will be fully operational after the seismic event."

B. UL listed.

C. RoHS compliant.

D. Compliant with requirements of the Payment Card Industry Data Security Standard.

2.02 19-INCH EQUIPMENT RACKS

A. Description: Wall mounted rack with threaded rails designed for mounting telecommunications equipment. Width is compatible with EIA/ECIA 310-E, 19-inch equipment mounting with an opening of 17.72-inches between rails.

B. Manufacturers: Subject to compliance with requirements, available manufacturers offering products that may be incorporated into the Work include, but are not limited to the following:

1. Chatsworth.
2. Middle Atlantic Products, Inc.
3. Hoffman.
4. Or approved equal.

C. General Requirements:

1. Frames: Modular units designed for telecommunications terminal support and coordinated with dimensions of units to be supported.
2. Material: Extruded steel.
3. Finish: Manufacturer's standard, baked-polyester powder coat.
4. Color: Black.

D. Wall-Mounted Racks:

1. Height: As indicated on Drawings.
2. Load Rating: 150 lb.
3. Wall Attachment: Four mounting holes.
4. Equipment Access: Integral swing.

E. Cable Management:

1. Metal, with integral wire retaining fingers.
2. Baked-polyester powder coat finish.
3. Vertical cable management panels shall have front and rear channels, with covers.

4. Provide horizontal crossover cable manager at the top of each relay rack, with a minimum height of two rack units each.
5. Provide horizontal managers equal to Middle Atlantic Products, Inc. HCM series (2 RMS for each 48 port patch panel, 1 RMS for each 24 port patch panel, 1 RMS minimum for each 24 port switch, 2 RMS for each 48 port switch).
6. Rack-mounted Shelf: Include heavy-duty, double-side, 26 inch deep, 200 lb capacity shelf for each piece of equipment in the rack that does not have rack mounting capability.

2.03 GROUNDING

A. Comply with requirements in Section 26 05 26 "Grounding and Bonding for Communications Systems" for grounding conductors and connectors.

B. Rack and Cabinet TGBs: Rectangular bars of hard-drawn solid copper, accepting conductors ranging from No. 14 to No. 2/0 AWG, NRTL listed as complying with UL 467, and complying with TIA-606-B. Predrilling shall be with holes for use with lugs specified in this Section.

1. Cabinet-Mounted TGB: Terminal block, with stainless-steel or copper-plated hardware for attachment to cabinet.
2. Rack-Mounted Horizontal TGB: Designed for mounting in 19-inch equipment racks. Include a copper splice bar for transitioning to an adjoining rack, and stainless-steel or copper-plated hardware for attachment to the rack.
3. Rack-Mounted Vertical TGB: 36 inches long, with stainless-steel or copper-plated hardware for attachment to rack.

2.04 LABELING

A. Comply with TIA-606-B and UL 969 for a system of labeling materials, including label stocks, laminating adhesives, and inks used by label printers.

PART 3 - EXECUTION

3.01 INSTALLATION

A. Comply with NECA 1.

B. Comply with BICSI TDMM for layout of communications equipment spaces.

C. Comply with BICSI ITSIMM for installation of communications equipment spaces.

D. Bundle, lace, and train conductors and cables to terminal points without exceeding manufacturer's limitations on bending radii. Install lacing bars and distribution spools.

E. Coordinate layout and installation of communications equipment in racks and room. Coordinate service entrance configuration with service provider.

1. Meet jointly with system providers, equipment suppliers, and Owner to exchange information and agree on details of equipment configurations and installation interfaces.
2. Record agreements reached in meetings and distribute them to other participants.
3. Adjust configurations and locations of distribution frames, cross-connects, and patch panels in equipment spaces to accommodate and optimize configuration and space requirements of telecommunications equipment.
4. Adjust configurations and locations of equipment with distribution frames, cross-connects, and patch panels of cabling systems of other communications, electronic safety and security, and related systems that share space in equipment room.

F. Coordinate location of power raceways and receptacles with locations of communications equipment requiring electrical power to operate.

3.02 GROUNDING

A. Comply with NECA/BICSI 607.

B. Install grounding according to BICSI ITSIMM, "Bonding, Grounding (Earthing) and Electrical Protection."

C. Locate TGB to minimize length of bonding conductors. Fasten to wall, allowing at least 2-inches of clearance behind TGB. Connect TGB with a minimum No. 4 AWG grounding electrode conductor from TGB to suitable electrical building ground. Connect rack TGB to near TGB or the TMGB.

1. Bond the shield of shielded cable to patch panel, and bond patch panel to TGB or TMGB.

3.03 IDENTIFICATION

A. Coordinate system components, wiring, and cabling complying with TIA-606-B.

B. Label colors for equipment identification shall comply with TIA-606-B.

END OF SECTION 27 11 16

SECTION 27 15 13
COMMUNICATIONS COPPER HORIZONTAL CABLING

PART 1 - GENERAL

1.01 RELATED DOCUMENTS

A. Drawings and general provisions of the Contract, including General and Supplementary Conditions and Division 01 Specification Sections, apply to this Section.

1.02 SUMMARY

A. Section Includes:

1. Category 6 twisted pair cable.
2. Twisted pair cable hardware, including plugs and jacks.
3. Cable management system.
4. Cabling identification products.
5. Grounding provisions for twisted pair cable.
6. Source quality control requirements for twisted pair cable.

1.03 DEFINITIONS

A. Cross-Connect: A facility enabling the termination of cable elements and their interconnection or cross-connection.

B. EMI: Electromagnetic interference.

C. FTP: Shielded twisted pair.

D. F/FTP: Overall foil screened cable with foil screened twisted pair.

E. F/UTP: Overall foil screened cable with unscreened twisted pair.

F. IDC: Insulation displacement connector.

G. LAN: Local area network.

H. Jack: Also commonly called an "outlet," it is the fixed, female connector.

I. Plug: Also commonly called a "connector," it is the removable, male telecommunications connector.

J. RCDD: Registered Communications Distribution Designer.

K. Screen: A metallic layer, either a foil or braid, placed around a pair or group of conductors.

L. Shield: A metallic layer, either a foil or braid, placed around a pair or group of conductors.

M. S/FTP: Overall braid screened cable with foil screened twisted pair.

N. S/UTP: Overall braid screened cable with unscreened twisted pairs.

O. UTP: Unscreened (unshielded) twisted pair.

1.04 COPPER HORIZONTAL CABLING DESCRIPTION

A. Horizontal cable cabling system shall provide interconnections between Distributor A, Distributor B, or Distributor C, and the equipment outlet, otherwise known as "Cabling Subsystem 1," in the telecommunications cabling system structure. Cabling system consists of horizontal cables, intermediate and main cross-connects, mechanical terminations, and patch cords or jumpers used for horizontal-to-horizontal cross-connection.

1. Horizontal cabling shall contain no more than one transition point or consolidation point between the horizontal cross-connect and the telecommunications equipment outlet.

2. Bridged taps and splices shall not be installed in the horizontal cabling.

B. The maximum allowable horizontal cable length is 295 feet. This maximum allowable length does not include an allowance for the length of 16 feet to the workstation equipment or in the horizontal cross-connect.

1.05 ACTION SUBMITTALS

A. Product Data: For each type of product.

B. Shop Drawings:

1. System Labeling Schedules: Electronic copy of labeling schedules, in software and format selected by Owner.

2. System Labeling Schedules: Electronic copy of labeling schedules that are part of the cabling and asset identification system of the software.

3. Cabling administration Drawings and printouts.

4. Wiring diagrams and installation details of telecommunications equipment, to show location and layout of telecommunications equipment, including the following:

a. Telecommunications rooms plans and elevations.

b. Telecommunications pathways.

c. Telecommunications system access points.

d. Telecommunications grounding system.

e. Telecommunications conductor drop locations.

f. Typical telecommunications details.

g. Mechanical, electrical, and plumbing systems.

C. Twisted pair cable testing plan.

1.06 INFORMATIONAL SUBMITTALS

A. Qualification Data: For Installer.

B. Product Certificates: For each type of product.

C. Source quality-control reports.

D. Field quality-control reports.

1.07 CLOSEOUT SUBMITTALS

A. Maintenance Data: For splices and connectors to include in maintenance manuals.

B. Software and Firmware Operational Documentation:

1. Software operating and upgrade manuals.

2. Program Software Backup: On USB media or compact disk, complete with data files.

3. Device address list.

4. Printout of software application and graphic screens.

1.08 QUALITY ASSURANCE

A. Installer Qualifications: Cabling Installer must have personnel certified by BICSI on staff.

1. Five years experience installing Category 6 cabling systems in accordance with TIA-568 standards.

1.09 DELIVERY, STORAGE, AND HANDLING

A. Test cables upon receipt at Project site.

1. Test each pair of twisted pair cable for open and short circuits.

1.10 PROJECT CONDITIONS

A. Environmental Limitations: Do not deliver or install cables and connecting materials until wet work in spaces is complete and dry, and temporary HVAC system is operating and maintaining ambient temperature and humidity conditions at occupancy levels during the remainder of the construction period.

1.11 COORDINATION

A. Coordinate layout and installation of telecommunications pathways and cabling with Owner's telecommunications and LAN equipment and service suppliers.

PART 2 - PRODUCTS

2.01 MANUFACTURERS

A. Cables: Provide products by one of the following manufacturers or approved equal.

1. Commscope.
2. General Cable.
3. Hitachi.
4. Hubbell.
5. Mohawk.
6. OCC.
7. Panduit.
8. Systimax.
9. Siemon.

B. Hardware: Provide products by one of the following manufacturers or approved equal.

1. Commscope.
2. Hubbell.
3. ICC.
4. OCC.
5. Ortronics.
6. Panduit.
7. Systimax.
8. Siemon.

2.02 PERFORMANCE REQUIREMENTS

A. General Performance: Horizontal cabling system shall comply with transmission standards in TIA-568-C.1, when tested according to test procedures of this standard.

B. Telecommunications Pathways and Spaces: Comply with TIA-569-D.

C. Grounding: Comply with TIA-607-C.

2.03 GENERAL CABLE CHARACTERISTICS

A. Listed and labeled by an NRTL acceptable to authorities having jurisdiction as complying with the applicable standard and NFPA 70 for the following types:

1. Communications, Plenum Rated: Type CMP complying with UL 1685 (use in return air plenum spaces).
2. Communications, Non-plenum: Type CMR complying with UL 1666 (use in non-plenum spaces).

B. Surface-Burning Characteristics: Comply with ASTM E84; testing by a qualified testing agency. Identify products with appropriate markings of applicable testing agency.

1. Flame-Spread Index: 25 or less.

2. Smoke-Developed Index: 450 or less.

C. RoHS compliant.

2.04 CATEGORY 6 TWISTED PAIR CABLE

A. Description: Four-pair, balanced-twisted pair cable, with internal spline, certified to meet transmission characteristics of Category 6 cable at frequencies up to 250MHz.

B. Standard: Comply with NEMA WC 66/ICEA S-116-732 and TIA-568-C.2 for Category 6 cables.

C. Conductors: 100-ohm, 23 AWG solid copper.

D. Shielding/Screening: Unshielded twisted pairs (UTP).

E. Cable Rating: Riser or plenum. Use plenum rate in return air plenum spaces.

F. Jacket: Blue thermoplastic.

2.05 TWISTED PAIR CABLE HARDWARE

A. Description: Hardware designed to connect, splice, and terminate twisted pair copper communications cable.

B. General Requirements for Twisted Pair Cable Hardware:

1. Comply with the performance requirements of Category 6.

2. Comply with TIA-568-C.2, IDC type, with modules designed for punch-down caps or tools.

3. Cables shall be terminated with connecting hardware of same category or higher.

C. Source Limitations: Obtain twisted pair cable hardware from single source from single manufacturer.

D. Connecting Blocks:

1. 110-style IDC for Category 6.

2. 110-style IDC for Category 6a.

3. Provide blocks for the number of cables terminated on the block, plus 25 percent spare, integral with connector bodies, including plugs and jacks where indicated.

E. Cross-Connect: Modular array of connecting blocks arranged to terminate building cables and permit interconnection between cables.

1. Number of Terminals per Field: One for each conductor in assigned cables.

F. Patch Panel: Modular panels housing numbered jack units with IDC-type connectors at each jack location for permanent termination of pair groups of installed cables.

1. Features:

a. Universal T568A and T568B wiring labels.

b. Labeling areas adjacent to conductors.

c. Replaceable connectors.

d. 24 or 48 ports.

2. Construction: 16-gauge steel and mountable on 19-inch equipment racks.

3. Number of Jacks per Field: One for each four-pair cable indicated.

G. Patch Cords: Factory-made, four-pair cables in appropriate heights and lengths; terminated with an eight-position modular plug at each end. Provide for each patch panel port (used or unused).

1. Patch cords shall have bend-relief-compliant boots and color-coded icons to ensure performance. Patch cords shall have latch guards to protect against snagging.

2. Patch cords shall have color-coded boots for circuit identification.

H. Plugs and Plug Assemblies:

1. Male; eight position; color-coded modular telecommunications connector designed for termination of a single four-pair, 100-ohm, unshielded or shielded twisted pair cable.

2. Standard: Comply with TIA-568-C.2.

3. Marked to indicate transmission performance.

I. Jacks and Jack Assemblies:

1. Female; eight position; modular; fixed telecommunications connector designed for termination of a single four-pair, 100-ohm, unshielded or shielded twisted pair cable.

2. Designed to snap-in to a patch panel or faceplate.

3. Standard: Comply with TIA-568-C.2.

4. Marked to indicate transmission performance.

J. Faceplate:

1. Four port, vertical single gang faceplates designed to mount to single gang wall boxes.

2. Plastic Faceplate: High-impact plastic. Coordinate color with Section 26 27 26 "Wiring Devices."

3. Metal Faceplate: Steel, complying with requirements (only in unfinished areas) in Section 26 27 26 "Wiring Devices."
4. For use with snap-in jacks accommodating any combination of twisted pair, optical fiber, and coaxial work area cords.
    a. Flush mounting jacks, positioning the cord at a 45-degree angle.

K. Legend:
1. Machine printed, in the field, using adhesive-tape label.
2. Snap-in, clear-label covers and machine-printed paper inserts.

2.06 IDENTIFICATION PRODUCTS

A. Comply with TIA-606-B and UL 969 for a system of labeling materials, including label stocks, laminating adhesives, and inks used by label printers.

2.07 GROUNDING

A. Comply with requirements in Section 26 05 26 "Grounding and Bonding for Electrical Systems" for grounding conductors and connectors.

B. Comply with TIA-607-B.

2.08 SOURCE QUALITY CONTROL

A. Testing Agency: Engage a qualified testing agency to evaluate cables.

B. Factory test cables on reels according to TIA-568-C.1.

C. Factory test twisted pair cables according to TIA-568-C.2.

D. Cable will be considered defective if it does not pass tests and inspections.

E. Prepare test and inspection reports.

PART 3 - EXECUTION

3.01 WIRING METHODS

A. Wiring Method: Install cables in raceways and cable trays, except within consoles, cabinets, desks, and counters and except in accessible ceiling spaces, attics, and gypsum board partitions where unenclosed wiring method may be used. Conceal raceway and cables, except in unfinished spaces.
1. Install plenum cable in environmental air spaces, including plenum ceilings.
2. Comply with requirements for raceways and boxes specified in Section 26 05 33 "Raceways and Boxes for Electrical Systems."

B. Wiring Method: Conceal conductors and cables in accessible ceilings, walls, and floors where possible.

C. Wiring within Enclosures: Bundle, lace, and train cables within enclosures. Connect to terminal points with no excess and without exceeding manufacturer's limitations on bending radii. Provide and use lacing bars and distribution spools. Install conductors parallel with or at right angles to sides and back of enclosure.

3.02 INSTALLATION OF PATHWAYS

A. Comply with Section 26 05 29 "Hangers and Supports for Electrical Systems."

B. Comply with Section 26 05 36 "Cable Trays for Communications Systems."

C. Drawings indicate general arrangement of pathways and fittings.

3.03 INSTALLATION OF TWISTED-PAIR HORIZONTAL CABLES

A. Comply with NECA 1 and NECA/BICSI 568.

B. General Requirements for Cabling:

1. Comply with TIA-568-C.0, TIA-568-C.1, and TIA-568-C.2.

2. Comply with BICSI's "Information Transport Systems Installation Methods Manual (ITSIMM), Ch. 5, "Copper Structured Cabling Systems," "Cable Termination Practices" Section.

3. Install 110-style IDC termination hardware unless otherwise indicated.

4. Do not untwist twisted pair cables more than 1/2 inch from the point of termination to maintain cable geometry.

5. Terminate all conductors; no cable shall contain unterminated elements. Make terminations only at indicated outlets, terminals, cross-connects, and patch panels.

6. Consolidation points may be used only for making a direct connection to equipment outlets:

a. Do not use consolidation point as a cross-connect point, as a patch connection, or for direct connection to workstation equipment.

b. Locate consolidation points for twisted-pair cables at least 49 feet from communications equipment room.

7. Cables may not be spliced. Secure and support cables at intervals not exceeding 30 inches and not more than 6 inches from cabinets, boxes, fittings, outlets, racks, frames, and terminals.

8. Install lacing bars to restrain cables, prevent straining connections, and prevent bending cables to smaller radii than minimums recommended by manufacturer.

9. Bundle, lace, and train conductors to terminal points without exceeding manufacturer's limitations on bending radii, but not less than radii specified in BICSI Information Transport Systems Installation Methods Manual , Ch. 5, "Copper

Structured Cabling Systems," "Cable Termination Practices" Section. Use lacing bars and distribution spools.

10. Do not install bruised, kinked, scored, deformed, or abraded cable. Do not splice cable between termination, tap, or junction points. Remove and discard cable if damaged during installation, and replace it with new cable.
11. Cold-Weather Installation: Bring cable to room temperature before dereeling. Heat lamps shall not be used for heating.
12. In the communications equipment room, install a 10-foot long service loop on each end of cable.
13. Pulling Cable: Comply with BICSI Information Transport Systems Installation Methods Manual, Ch. 5, "Copper Structured Cabling Systems," "Pulling and Installing Cable" Section. Monitor cable pull tensions.

C. Open-Cable Installation:

1. Install cabling with horizontal and vertical cable guides in telecommunications spaces with terminating hardware and interconnection equipment.
2. Suspend twisted pair cabling, not in a wireway or pathway, a minimum of 8 inches above ceilings by cable supports not more than 60 inches apart.
3. Cable shall not be run through structural members or in contact with pipes, ducts, or other potentially damaging items.

D. Installation of Cable Routed Exposed under Raised Floors:

1. Install plenum-rated cable only.
2. Install cabling after the flooring system has been installed in raised floor areas.
3. Coil cable 6 feet long not less than 12 inches in diameter below each feed point.

E. Group connecting hardware for cables into separate logical fields.

F. Separation from EMI Sources:

1. Comply with recommendations from BICSI's "Telecommunications Distribution Methods Manual" and TIA-569-D for separating unshielded copper communication cable from potential EMI sources, including electrical power lines and equipment.
2. Separation between open communications cables or cables in nonmetallic raceways and unshielded power conductors and electrical equipment shall be as follows:
   a. Electrical Equipment Rating Less Than 2 kVA: A minimum of 5 inches.
   b. Electrical Equipment Rating between 2 and 5 kVA: A minimum of 12 inches.
   c. Electrical Equipment Rating More Than 5 kVA: A minimum of 24 inches.
3. Separation between communications cables in grounded metallic raceways and unshielded power lines or electrical equipment shall be as follows:

a. Electrical Equipment Rating Less Than 2 kVA: A minimum of 2-1/2 inches.

b. Electrical Equipment Rating between 2 and 5 kVA: A minimum of 6 inches.

c. Electrical Equipment Rating More Than 5 kVA: A minimum of 12 inches.

4. Separation between communications cables in grounded metallic raceways, power lines, and electrical equipment located in grounded metallic conduits or enclosures shall be as follows:

a. Electrical Equipment Rating Less Than 2 kVA: No requirement.

b. Electrical Equipment Rating between 2 and 5 kVA: A minimum of 3 inches.

c. Electrical Equipment Rating More Than 5 kVA: A minimum of 6 inches.

5. Separation between Communications Cables and Electrical Motors and Transformers, 5 kVA or HP and Larger: A minimum of 48 inches.

6. Separation between Communications Cables and Fluorescent Fixtures: A minimum of 5 inches.

3.04 FIRESTOPPING

A. Comply with TIA-569-D, Annex A, "Firestopping."

B. Comply with "Firestopping Systems" Article in BISCI's "Telecommunications Distribution Methods Manual."

3.05 GROUNDING

A. Install grounding according to the "Grounding, Bonding, and Electrical Protection" chapter in BICSI's "Telecommunications Distribution Methods Manual."

B. Comply with TIA-607-C and NECA/BICSI-607.

C. Locate grounding bus bar to minimize the length of bonding conductors. Fasten to wall, allowing at least a 2-inch clearance behind the grounding bus bar. Connect grounding bus bar to suitable electrical building ground, using a minimum No. 4 AWG grounding electrode conductor.

D. Bond metallic equipment to the grounding bus bar, using not smaller than a No. 6 AWG equipment grounding conductor.

3.06 IDENTIFICATION

A. Identify system components, wiring, and cabling complying with TIA-606-B. C

1. Administration Class: Class 3.

2. Color-code cross-connect fields and apply colors to voice and data service backboards, connections, covers, and labels.

B. Paint and label colors for equipment identification shall comply with TIA-606-B for Class 3 level of administration.

C. Cable Schedule: Install in a prominent location in each equipment room and wiring closet. List incoming and outgoing cables and their designations, origins, and destinations. Protect with rigid frame and clear plastic cover. Furnish an electronic copy of final comprehensive schedules for Project.

D. Cabling Administration Drawings: Show building floor plans with cabling administration-point labeling. Identify labeling convention and show labels for telecommunications closets, terminal hardware and positions, horizontal cables, work areas and workstation terminal positions, grounding buses and pathways, and equipment grounding conductors.

E. Cable and Wire Identification:

1. Label each cable within 4 inches of each termination and tap, where it is accessible in a cabinet or junction or outlet box, and elsewhere as indicated.

2. Each wire connected to building-mounted devices is not required to be numbered at the device if wire color is consistent with associated wire connected and numbered within panel or cabinet.

3. Exposed Cables and Cables in Cable Trays and Wire Troughs: Label each cable at intervals not exceeding 15 feet.

4. Label each terminal strip, and screw terminal in each cabinet, rack, or panel.

a. Individually number wiring conductors connected to terminal strips, and identify each cable or wiring group, extended from a panel or cabinet to a building-mounted device, with the name and number of a particular device.

b. Label each unit and field within distribution racks and frames.

5. Identification within Connector Fields in Equipment Rooms and Wiring Closets: Label each connector and each discrete unit of cable-terminating and -connecting hardware. Where similar jacks and plugs are used for both voice and data communication cabling, use a different color for jacks and plugs of each service.

F. Labels shall be preprinted or computer-printed type, with a printing area and font color that contrast with cable jacket color but still comply with TIA-606-B requirements for the following:

1. Cables use flexible vinyl or polyester that flexes as cables are bent.

3.07 FIELD QUALITY CONTROL

A. Perform tests and inspections.

B. Tests and Inspections:

1. Visually inspect jacket materials for NRTL certification markings. Inspect cabling terminations in communications equipment rooms for compliance with color-coding for pin assignments, and inspect cabling connections for compliance with TIA-568-C.1.

2. Visually inspect cable placement, cable termination, grounding and bonding, equipment and patch cords, and labeling of all components.
3. Test twisted pair cabling for DC loop resistance, shorts, opens, intermittent faults, and polarity between conductors. Test operation of shorting bars in connection blocks. Test cables after termination but not cross-connection.
    a. Test instruments shall meet or exceed applicable requirements in TIA-568-C.2. Perform tests with a tester that complies with performance requirements in "Test Instruments (Normative)" Annex, complying with measurement accuracy specified in "Measurement Accuracy (Informative)" Annex. Use only test cords and adapters that are qualified by test equipment manufacturer for channel or link test configuration.

C. Data for each measurement shall be documented. Data for submittals shall be printed in a summary report that is formatted similarly to Table 10.1 in BICSI's "Telecommunications Distribution Methods Manual," or shall be transferred from the instrument to the computer, saved as text files, printed, and submitted.

D. Remove and replace cabling where test results indicate that they do not comply with specified requirements.

E. End-to-end cabling will be considered defective if it does not pass tests and inspections.

F. Prepare test and inspection reports.

END OF SECTION 27 15 13

SECTION 27 15 23
COMMUNICATIONS OPTICAL FIBER HORIZONTAL CABLING

PART 1 - GENERAL

1.01 RELATED DOCUMENTS

A. Retain or delete this article in all Sections of Project Manual.

B. Drawings and general provisions of the Contract, including General and Supplementary Conditions and Division 01 Specification Sections, apply to this Section.

1.02 SUMMARY

A. Section Includes:

1. 850 nanometer laser-optimized 50/125 micrometer multimode optical fiber cable (OM4).
2. 9/125 micrometer, single-mode, indoor-outdoor optical fiber cable (OS2).
3. Optical fiber cable connecting hardware, patch panels, and cross-connects.
4. Grounding.
5. Cabling identification products.

1.03 DEFINITIONS

A. BICSI: Building Industry Consulting Service International.

B. Cross-Connect: A facility enabling the termination of cable elements and their interconnection or cross-connection.

C. RCDD: Registered Communications Distribution Designer.

1.04 OPTICAL FIBER HORIZONTAL CABLING DESCRIPTION

A. Optical fiber horizontal cabling system shall provide interconnections between Distributor A, Distributor B, or Distributor C and the equipment outlet, otherwise known as "Cabling Subsystem 1" in the telecommunications cabling system structure. Cabling system consists of horizontal cables, intermediate and main cross-connects, mechanical terminations, and patch cords or jumpers used for horizontal-to-horizontal cross-connection.

1. TIA-568-C.1 requires that a minimum of two equipment outlets be installed for each work area.
2. Horizontal cabling shall contain no more than one transition point or consolidation point between the horizontal cross-connect and the equipment outlet.
3. Bridged taps and splices shall not be installed in the horizontal cabling.

B. A work area is approximately 100 sq. ft., and includes the components that extend from the equipment outlets to the equipment.

C. The maximum allowable horizontal cable length is 295 feet. This maximum allowable length does not include an allowance for the length of 16 feet to the workstation equipment or in the horizontal cross-connect.

1.05 ACTION SUBMITTALS

A. Product Data: For each type of product.

B. Shop Drawings:

1. System Labeling Schedules: Electronic copy of labeling schedules, in software and format selected by Owner.

2. System Labeling Schedules: Electronic copy of labeling schedules that are part of the cabling and asset identification system of the software.

3. Cabling administration Drawings and printouts.

4. Wiring diagrams and installation details of telecommunications equipment, to show location and layout of telecommunications equipment, including the following:

a. Telecommunications rooms plans and elevations.

b. Telecommunications pathways.

c. Telecommunications system access points.

d. Telecommunications grounding system.

e. Telecommunications conductor drop locations.

f. Typical telecommunications details.

g. Mechanical, electrical, and plumbing systems.

C. Fiber optic cable testing plan.

1.06 INFORMATIONAL SUBMITTALS

A. Qualification Data: For Installer.

B. Product Certificates: For each type of product.

C. Source quality-control reports.

D. Field quality-control reports.

1.07 CLOSEOUT SUBMITTALS

A. Software and Firmware Operational Documentation:

1. Software operating and upgrade manuals.

2. Program Software Backup: On USB media or compact disk, complete with data files.

3. Device address list.

4. Printout of software application and graphic screens.

B. Maintenance Data: For optical fiber cable, splices, and connectors to include in maintenance manuals.

1.08 QUALITY ASSURANCE

A. Installer Qualifications:

1. Five years' experience installing fiber optic systems for similar project type in accordance with TIA-568 standards.

B. Testing Agency Qualifications: Testing agency must have personnel certified by BICSI on staff.

1. Testing Agency's Field Supervisor: Currently certified by BICSI as an RCDD to supervise on-site testing.

1.09 DELIVERY, STORAGE, AND HANDLING

A. Test cables upon receipt at Project site.

1. Test optical fiber cable to determine the continuity of the strand end to end.

2. Test optical fiber cable while on reels. Use an optical time domain reflectometer to verify the cable length and locate cable defects, splices, and connector, including the loss value of each. Retain test data and include the record in maintenance data.

1.10 PROJECT CONDITIONS

A. Environmental Limitations: Do not deliver or install cables and connecting materials until wet work in spaces is complete and dry, and temporary HVAC system is operating and maintaining ambient temperature and humidity conditions at occupancy levels during the remainder of the construction period.

1.11 COORDINATION

A. Coordinate layout and installation of telecommunications pathways and cabling with Owner's telecommunications equipment and service suppliers.

PART 2 - PRODUCTS

2.01 MANUFACTURERS

A. Provide products by one of the following manufacturers or approved equal:

1. Panduit.

2. Corning.

3. General Cable.

4. Hubbell.

5. Leviton.

6. OCC.

7. Commscope.

8. Siemon.

2.02 PERFORMANCE REQUIREMENTS

A. General Performance: Horizontal cabling system shall comply with transmission standards in TIA-568-C.1, when tested according to test procedures of this standard.

B. Telecommunications Pathways and Spaces: Comply with TIA-569-D.

C. Grounding: Comply with TIA-607-C.

2.03 850 NANOMETER LASER-OPTIMIZED, 50/125 MICROMETER, MULTIMODE OPTICAL FIBER CABLE (OM4)

A. Description: Multimode, 50/125-micrometer, nonconductive, tight buffer, optical fiber cable.

B. Standards:

1. Comply with ICEA S-83-596 for mechanical properties.

2. Comply with TIA-568-C.3 for performance specifications.

3. Comply with TIA-492AAAD for detailed specifications.

C. Conductive cable shall be steel armored type.

D. Maximum Attenuation: 3.50 dB/km at 850 nm; 1.5 dB/km at 1300 nm.

E. Minimum Overfilled Modal Bandwidth-length Product: 3500 MHz-km at 850 nm; 500 MHz-km at 1300 nm.

F. Minimum Effective Modal Bandwidth-length Product: 4700 MHz-km at 850 nm.

G. Jacket:

1. Jacket Color: Aqua.

2. Cable cordage jacket, fiber, unit, and group color shall be according to TIA-598-D.

3. Imprinted with fiber count, fiber type, and aggregate length at regular intervals not to exceed 40 inches.

H. Listed and labeled by an NRTL acceptable to authorities having jurisdiction as complying with UL 444, UL 1651, and NFPA 70 for the following types:

1. Plenum Rated, Nonconductive: Type OFNP, complying with NFPA 262.

2.04 9/125 MICROMETER, SINGLE-MODE, INDOOR-OUTDOOR OPTICAL FIBER CABLE (OS2)

A. Description: Single mode, 9/125-micrometer, 2 fibers, tight buffered, nonconductive optical fiber cable.

B. Conductive cable shall be steel armored type.

C. Maximum Attenuation: 0.5 dB/km at 1310 nm; 0.5 dB/km at 1550 nm.

D. Jacket:

1. Jacket Color: Yellow.
2. Cable cordage jacket, fiber, unit, and group color shall be according to TIA-598-D.
3. Imprinted with fiber count, fiber type, and aggregate length at regular intervals not to exceed 40 inches.

E. Standards:
1. Comply with TIA-492CAAB for detailed specifications.
2. Comply with TIA-568-C.3 for performance specifications.
3. Comply with ICEA S-104-696 for mechanical properties.

F. Listed and labeled by an NRTL acceptable to authorities having jurisdiction as complying with UL 444, UL 1651, and NFPA 70 for the following types:
1. Plenum Rated, Nonconductive: Type OFNP, complying with NFPA 262.

2.05 OPTICAL FIBER CABLE HARDWARE

A. Standards:
1. Comply with Fiber Optic Connector Intermateability Standard (FOCIS) specifications of the TIA-604 series.
2. Comply with TIA-568-C.3.

B. Cross-Connects and Patch Panels: Modular panels housing multiple-numbered, duplex cable connectors.
1. Number of Connectors per Field: One for each fiber of cable or cables assigned to field, plus spares and blank positions adequate to suit specified expansion criteria.

C. Patch Cords: Factory-made, single-fiber cables in 36-inch lengths.

D. Connector Type: Type LC complying with TIA-604-10-B connectors.

E. Plugs and Plug Assemblies:
1. Male; color-coded modular telecommunications connector designed for termination of a single optical fiber cable.
2. Insertion loss not more than 0.25 dB.
3. Marked to indicate transmission performance.

F. Jacks and Jack Assemblies:
1. Female; quick-connect, simplex and duplex; fixed telecommunications connector designed for termination of a single optical fiber cable.
2. Insertion loss not more than 0.25 dB.
3. Marked to indicate transmission performance.
4. Designed to snap-in to a patch panel or faceplate.

G. Faceplate:

1. Two-port, vertical single-gang faceplates designed to mount to single-gang wall boxes.
2. Plastic Faceplate: High-impact plastic. Coordinate color with Section 26 27 26 "Wiring Devices."
3. Metal Faceplate: Steel (only in unfinished spaces), complying with requirements in Section 26 27 26 "Wiring Devices."
4. For use with snap-in jacks accommodating any combination of twisted pair, optical fiber, and coaxial work area cords.

2.06 GROUNDING

A. Comply with requirements in Section 26 05 26 "Grounding and Bonding for Electrical Systems" for grounding conductors and connectors.

B. Comply with TIA-607-C.

2.07 IDENTIFICATION PRODUCTS

A. Comply with TIA-606-B and UL 969 for a system of labeling materials, including label stocks, laminating adhesives, and inks used by label printers.

2.08 SOURCE QUALITY CONTROL

A. Testing Agency: Engage a qualified testing agency to evaluate cables.

B. Factory test multimode optical fiber cables according to TIA-526-14-B and TIA-568-C.3.

C. Factory test preterminated optical fiber cable assemblies according to TIA-526-14-B and TIA-568-C.3.

D. Cable will be considered defective if it does not pass tests and inspections.

E. Prepare test and inspection reports.

PART 3 - EXECUTION

3.01 WIRING METHODS

A. Wiring Method: Install cables in raceways and cable trays except within consoles, cabinets, desks, and counters and except in accessible ceiling spaces, in attics, and in gypsum board partitions where unenclosed wiring method may be used. Conceal raceway and cables except in unfinished spaces.

1. Install plenum cable in environmental air spaces, including plenum ceilings.

B. Wiring Method: Conceal conductors and cables in accessible ceilings, walls, and floors where possible.

C. Wiring within Enclosures: Bundle, lace, and train cables within enclosures. Connect to terminal points with no excess and without exceeding manufacturer's limitations on bending radii. Provide and use lacing bars and distribution spools.

3.02 INSTALLATION OF OPTICAL FIBER HORIZONTAL CABLES

A. Comply with NECA 1, NECA 301 and NECA/BICSI 568.

B. General Requirements for Optical Fiber Cabling Installation:

1. Comply with TIA-568-C.1 and TIA-568-C.3.
2. Comply with BICSI ITSIMM, Ch. 6, "Cable Termination Practices."
3. Terminate all cables; no cable shall contain unterminated elements. Make terminations only at indicated outlets, terminals, cross-connects, and patch panels.
4. Cables may not be spliced. Secure and support cables at intervals not exceeding 30 inches and not more than 6 inches from cabinets, boxes, fittings, outlets, racks, frames, and terminals.
5. Install lacing bars to restrain cables, to prevent straining connections, and to prevent bending cables to smaller radii than minimums recommended by manufacturer.
6. Bundle, lace, and train cable to terminal points without exceeding manufacturer's limitations on bending radii, but not less than radii specified in BICSI ITSIMM, "Cabling Termination Practices" Chapter. Use lacing bars and distribution spools.
7. Do not install bruised, kinked, scored, deformed, or abraded cable. Do not splice cable between termination, tap, or junction points. Remove and discard cable if damaged during installation and replace it with new cable.
8. Cold-Weather Installation: Bring cable to room temperature before dereeling. Heat lamps shall not be used for heating.
9. In the communications equipment room, provide a 10-foot-long service loop on each end of cable.
10. Pulling Cable: Comply with BICSI ITSIMM, Ch. 4, "Pulling Cable." Monitor cable pull tensions.
11. Cable may be terminated on connecting hardware that is rack or cabinet mounted.

C. Open-Cable Installation:

1. Install cabling with horizontal and vertical cable guides in telecommunications spaces with terminating hardware and interconnection equipment.
2. Cable shall not be run through structural members or in contact with pipes, ducts, or other potentially damaging items.

D. Group connecting hardware for cables into separate logical fields.

3.03 FIRESTOPPING

A. Comply with TIA-569-D, Annex A, "Firestopping."

B. Comply with BICSI ITSIMM, "Firestopping" Chapter.

3.04 GROUNDING

A. Install grounding according to BICSI ITSIMM, "Grounding (Earthing), Bonding, and Electrical Protection" Chapter.

B. Comply with TIA-607-C and NECA/BICSI-607.

C. Locate grounding bus bar to minimize the length of bonding conductors. Fasten to wall allowing at least 2-inch clearance behind the grounding bus bar. Connect grounding bus bar with a minimum No. 4 AWG grounding electrode conductor from grounding bus bar to suitable electrical building ground.

D. Bond metallic equipment to the grounding bus bar, using not smaller than No. 6 AWG equipment grounding conductor.

3.05 IDENTIFICATION

A. Identify system components, wiring, and cabling complying with TIA-606-B.

1. Administration Class: Class 3.

2. Color-code cross-connect fields and apply colors to voice and data service backboards, connections, covers, and labels.

B. Paint and label colors for equipment identification shall comply with TIA-606-B for Class 3 level of administration.

C. Cable Schedule: Install in a prominent location in each equipment room and wiring closet. List incoming and outgoing cables and their designations, origins, and destinations. Protect with rigid frame and clear plastic cover. Furnish an electronic copy of final comprehensive schedules for Project.

D. Cabling Administration Drawings: Show building floor plans with cabling administration-point labeling. Identify labeling convention and show labels for telecommunications closets, horizontal pathways and cables, entrance pathways and cables, terminal hardware and positions, horizontal cables, work areas and workstation terminal positions, grounding buses and pathways, and equipment grounding conductors.

E. Cable and Wire Identification:

1. Label each cable within 4 inches of each termination and tap, where it is accessible in a cabinet or junction or outlet box, and elsewhere as indicated.

2. Each wire connected to building-mounted devices is not required to be numbered at device if color of wire is consistent with associated wire connected and numbered within panel or cabinet.

3. Exposed Cables and Cables in Cable Trays and Wire Troughs: Label each cable at intervals not exceeding 15 feet.

4. Label each unit and field within distribution racks and frames.

5. Identification within Connector Fields in Equipment Rooms and Wiring Closets: Label each connector and each discrete unit of cable-terminating and connecting hardware. Where similar jacks and plugs are used for both voice and data communication cabling, use a different color for jacks and plugs of each service.

F. Labels shall be preprinted or computer-printed type with printing area and font color that contrasts with cable jacket color but still complies with requirements in TIA 606-B, for the following:

1. Flexible vinyl or polyester that flexes as cables are bent.

3.06 FIELD QUALITY CONTROL

A. Testing Agency: Owner will engage a qualified testing agency to perform tests and inspections.

B. Testing Agency: Engage a qualified testing agency to perform tests and inspections.

C. Manufacturer's Field Service: Engage a factory-authorized service representative to test and inspect components, assemblies, and equipment installations, including connections.

D. Perform tests and inspections.

E. Tests and Inspections:

1. Visually inspect optical fiber jacket materials for NRTL certification markings. Inspect cabling terminations in communications equipment rooms for compliance with color-coding for pin assignments, and inspect cabling connections for compliance with TIA-568-C.1.

2. Visually inspect cable placement, cable termination, grounding and bonding, equipment and patch cords, and labeling of all components.

3. Optical Fiber Cable Tests:

a. Test instruments shall meet or exceed applicable requirements in TIA-568-C.1. Use only test cords and adapters that are qualified by test equipment manufacturer for channel or link test configuration.

b. Link End-to-End Attenuation Tests:

i. Horizontal and Multimode Horizontal Link Measurements: Test at 850 or 1300 nm in one direction according to TIA-526-14-B, Method B, One Reference Jumper.

ii. Attenuation test results for horizontal links shall be less than 2.0 dB. Attenuation test results shall be less than those calculated according to equation in TIA-568-C.1.

F. Data for each measurement shall be documented. Data for submittals shall be printed in a summary report that is formatted similar to Table 10.1 in BICSI TDMM, or transferred from the instrument to the computer, saved as text files, and printed and submitted.

G. Remove and replace cabling where test results indicate that it does not comply with specified requirements.

H. End-to-end cabling will be considered defective if it does not pass tests and inspections.

I. Prepare test and inspection reports.

END OF SECTION 27 15 23

DIVISION 31

EARTHWORK

SECTION 31 00 00
EARTHWORK

PART 1 - GENERAL

1.01 DESCRIPTION

A. This work is the excavation, trenching and backfilling for the placement of structures, utilities, equipment and appurtenances, handling and storing materials for fill and backfill, bracing, shoring, trench protection, subgrade preparation, final grading, site dressing and cleanup.

B. To the extent possible, reuse existing topsoil and other materials excavated from the site.

1.02 REFERENCES

A. The most recent publication of all the following form a part of this specification:

AASHTO T99	Moisture-Density Relations of Soils and Soil-Aggregate Mixtures Using 5-lb Rammer and 12" Drop
ASTM D698	Moisture-Density Relations fo Soils and Soil-Aggregate Mixtures Using 5-lb Rammer and 12" Drop
AASHTO T191 ASTM D1556	Density of soil in-place by the sand-cone method
AASHTO T310 ASTM D6938	In-Place density and water content of soil and soil aggregate by Nuclear Method (Shallow Depth)
AASHTO T11 ASTM C117	Materials finer than 0.075 mm (No. 200) sieve in mineral aggregates by washing
AASHTO T27 ASTM C136	Sieve analysis of fine and coarse aggregate
AASHTO T89	Determining the liquid limit of soils
AASHTO T90	Determining the plastic limit and plasticity index of soils
ASTM D4318	Test method for liquid limit, plastic limit and plasticity index of soils

1.03 RELATED DOCUMENTS

A. The following documents and specification sections apply directly to this Section:

1. Division 01 Section “Payment Procedures" for a schedule of unit prices;
2. Division 01 Temporary Facilities and Controls;
3. Division 02 - Existing Conditions Site Clearing;

4. Division 02 - Existing Conditions Dewatering;
5. Division 31 – Site Clearing, Geotextiles;
6. Division 32 - Exterior Improvements;
7. Division 33 - Utilities;
8. Division 40 – Process Interconnections

1.04 DEFINITIONS

A. Backfill: Soil materials used to fill an excavation.

B. Base Course: Layer placed between the subbase course and asphalt paving.

C. Bedding Course: Layer placed over the excavated subgrade before installing structure.

D. Borrow: Satisfactory soil imported from off-site for use as fill or backfill.

E. Select Subgrade: Satisfactory soil imported from off-site for use between membrane liner and imported dike material.

F. Excavation: Removal of material encountered above subgrade elevations.

1. Additional Excavation: Excavation below subgrade elevations as directed by Engineer. Additional excavation and replacement material will be paid for according to Contract provisions for changes in the Work.
2. Bulk Excavation: Excavations more than 10 feet in width and pits more than 30 feet in either length or width.
3. Unauthorized Excavation: Excavation below subgrade elevations or beyond indicated dimensions without direction by Engineer. Unauthorized excavation, as well as remedial work directed by Engineer, shall be without additional compensation.

G. Fill: Soil materials used to raise existing grades.

H. Structures: Buildings, footings, foundations, retaining walls, slabs, manholes, lagoon inlets, valve pits, lift stations, tanks, curbs, mechanical and electrical appurtenances, or other man-made stationary features constructed above or below the ground surface.

I. Subbase Course: Layer placed between the subgrade and base course for asphalt paving, or layer placed between the subgrade and a concrete pavement or walk.

J. Subgrade: Surface or elevation remaining after completing excavation, or top surface of a fill or backfill immediately below subbase, drainage fill, or topsoil materials.

1.05 SUBMITTALS

A. Product Data: For the following:

1. Drainage fabric (if applicable);
2. Separation fabric (if applicable);
3. Stabilization fabric (if applicable).

B. Samples: For the following:

1. 30 lb samples, sealed in airtight containers, of each proposed soil material from on-site or borrow sources.

2. 1 ft x 1ft samples of drainage fabric.

C. Material Test Reports: From a qualified testing agency indicating and interpreting test results for compliance of the following with requirements indicated:

1. Classification according to ASTM D 2487 of each on-site or borrow soil material proposed for fill and backfill;

2. Laboratory compaction curve according to ASTM D 698 for each on-site or borrow soil material proposed for fill and backfill;

3. Liquid limit, plastic limit and plasticity of soils in accordance with AASHTO T89 and T90, respectively.

1.06 PROJECT CONDITIONS

A. Existing Utilities: Do not interrupt utilities serving facilities occupied by OWNER or others unless permitted in writing by Engineer and then only after arranging to provide temporary utility services according to requirements indicated:

1. Notify Engineer not less than 48 hours in advance of proposed utility interruptions.

2. Do not proceed with utility interruptions without Engineer's written permission.

3. Contact utility-locator service for area where Project is located before excavating.

B. Demolish and completely remove from site existing underground utilities indicated to be removed. Coordinate with utility companies to shut off services if lines are active.

PART 2 - PRODUCTS

2.01 SOIL MATERIALS

A. General: Provide borrow soil materials when sufficient satisfactory soil materials are not available from excavations.

B. Satisfactory Soils: ASTM D 2487 soil classification groups GW, GM, GC, ML, SC, SW, SP, and SM, or a combination of these group symbols; free of rock or gravel larger than 3 inches in any dimension, debris, waste, frozen materials, vegetation, clayey soils, and other deleterious matter.

C. Unsatisfactory Soils: ASTM D 2487 soil classification groups GP, MH, CL, CH, OL, OH, and PT, or a combination of these group symbols.

1. Unsatisfactory soils also include satisfactory soils not maintained within 4 percent of optimum moisture content at time of compaction.

2. *Unsatisfactory soils also include woody debris, organic materials, buried compost, dimensional lumber, etc.*

D. Backfill and Fill: Satisfactory soil materials.

E. Subbase: Naturally or artificially graded mixture of natural or crushed gravel, crushed stone, crushed recycled concrete, and natural or crushed sand.

F. Base: Naturally or artificially graded mixture of natural or crushed gravel, crushed stone, crushed recycled concrete, and natural or crushed sand.

G. Engineered Fill:

1. MPW Section 02234 – 2.4.A: *4" Minus* with the following gradation:

SIEVE SIZE	PERCENT PASSING
4-inch	100
No. 4	25 - 60
No. 40	10 - 30
No. 200	2 - 10

(This is the required backfill to replace unsatisfactory soils throughout the project site)

H. Bedding: Naturally or artificially graded mixture of natural or crushed gravel, crushed stone, and natural or crushed sand having a maximum ¾ inch size and must be free draining and nonplastic.

I. Drainage Fill: Washed, narrowly graded mixture of crushed stone, or crushed or uncrushed gravel having 100% passing the 1 ½ inch sieve and 0 to 10% passing the No. 10 sieve.

J. Select Subgrade: Satisfactory soil materials, with no rocks larger than 2" in any dimension.

2.02 ACCESSORIES

A. Drainage Fabric: Nonwoven geotextile, specifically manufactured as a drainage geotextile; made from polyolefins, polyesters, or polyamides.

PART 3 - EXECUTION

3.01 PREPARATION

A. Protect structures, utilities, sidewalks, pavements, and other facilities from damage caused by settlement, lateral movement, undermining, washout, and other hazards created by earthwork operations.

B. Protect subgrades and foundation soils against freezing temperatures or frost. Provide protective insulating materials as necessary.

C. Provide erosion-control measures to prevent erosion or displacement of soils and discharge of soil-bearing water runoff or airborne dust to adjacent properties and walkways.

3.02 DEWATERING

A. Prevent surface water and ground water from entering excavations, from ponding on prepared subgrades, and from flooding Project site and surrounding area.

B. Protect subgrades from softening, undermining, washout, and damage by rain or water accumulation.

1. Reroute surface water runoff away from excavated areas. Do not allow water to accumulate in excavations. Do not use excavated trenches as temporary drainage ditches.

3.03 EXPLOSIVES

A. Blasting is not anticipated to be necessary for this project and will not be allowed.

3.04 EXCAVATION, GENERAL

A. Unclassified Excavation: Excavation to subgrade elevations regardless of the character of surface and subsurface conditions encountered, including rock, soil materials, and obstructions.

1. Meet OSHA requirements for excavations (including work performed in pre-existing excavated openings) and excavated material stockpiles. This may require design of temporary slopes and/or shoring by a licensed professional engineer.

3.05 EXCAVATION FOR STRUCTURES

A. Excavate until suitable subgrade or indicated elevations are encountered, within a tolerance of plus or minus 1 inch. Extend excavations a sufficient distance from structures for placing and removing concrete formwork, for installing services and other construction, and for inspections.

1. Excavations for Footings and Foundations: Do not disturb bottom of excavation. Excavate by hand to final grade just before placing concrete reinforcement. Trim bottoms to required lines and grades to leave solid base to receive other work.

2. Excavation for wall footings, piping, mechanical or electrical utility structures: Excavate to elevations and dimensions indicated within a tolerance of plus or minus 1 inch. Do not disturb bottom of excavations intended for bearing surface.

3.06 EXCAVATION FOR WALKS AND PAVEMENTS

A. Excavate surfaces under walks and pavements to indicated cross sections, elevations, and grades.

3.07 APPROVAL OF SUBGRADE

A. Notify Engineer when excavations have reached required subgrade.

B. If Engineer determines that unsatisfactory soil is present, continue excavation and replace with compacted backfill or fill material as directed.

1. No additional payment will be made for remedial action due to non-replacement of unsuitable soils.

C. Proof roll subgrade with heavy pneumatic-tired equipment to identify soft pockets and

areas of excess yielding. Do not proof roll wet or saturated subgrades.

D. Reconstruct subgrades damaged by freezing temperatures, frost, rain, accumulated water, or construction activities, as directed by Engineer.

3.08 UNAUTHORIZED EXCAVATION

A. Fill unauthorized excavation under foundations or wall footings by extending bottom elevation of concrete foundation or footing to excavation bottom, without altering top elevation. Lean concrete fill may be used when approved by Engineer.

1. Fill unauthorized excavations under other construction or utility pipe as directed by Engineer.

3.09 STORAGE OF SOIL MATERIALS

A. All unsuitable soils excavated shall be stockpiled at an area designated by the OWNER that will be no further than 300 yards away. The unsuitable soil stockpile location, height and depth shall be at the discretion of the OWNER.

B. Stockpile imported backfill materials and satisfactory excavated soil materials without intermixing. Place, grade, and shape stockpiles to drain surface water. Cover (if necessary) to prevent windblown dust.

1. Stockpile soil materials away from edge of excavations. Do not store within drip line of remaining trees.

3.10 BACKFILL

A. Place and compact backfill in excavations promptly, but not before completing the following:

1. Construction below finish grade including, where applicable, dampproofing, waterproofing, and perimeter insulation.
2. Inspecting and testing underground utilities.
3. Removing concrete formwork.
4. Removing trash and debris.
5. Removing temporary shoring and bracing, and sheeting.
6. Installing permanent or temporary horizontal bracing on horizontally supported walls.

3.11 FILL

A. Preparation: Remove vegetation, topsoil, debris, unsatisfactory soil materials, obstructions, and deleterious materials from ground surface before placing fills.

B. Plow, scarify, bench, or break up sloped surfaces steeper than 1 vertical to 4 horizontal so fill material will bond with existing material.

C. Place and compact fill material in layers to required elevations as follows:

1. Under grass and planted areas, use satisfactory soil material.

2. Under walks and pavements, use satisfactory soil material.
3. Under steps and ramps, use engineered fill.
4. Under footings and foundations, use engineered fill.

3.12 MOISTURE CONTROL

A. Uniformly moisten or aerate subgrade and each subsequent fill or backfill layer before compaction to within 4 percent of optimum moisture content.
   1. Do not place backfill or fill material on surfaces that are muddy, frozen, or contain frost or ice.
   2. Remove and replace, or scarify and air-dry, otherwise satisfactory soil material that exceeds optimum moisture content by 4 percent and is too wet to compact to specified dry unit weight.

3.13 COMPACTION OF BACKFILLS AND FILLS

A. Place backfill and fill materials in layers not more than 8 inches in loose depth for material compacted by heavy compaction equipment, and not more than 4 inches in loose depth for material compacted by hand-operated tampers.
B. Place backfill and fill materials evenly on all sides of structures to required elevations, and uniformly along the full length of each structure.
C. Compact soil to not less than the following percentages of maximum dry unit weight according to ASTM D 698:
   1. Under structures, building slabs, steps, and pavements, scarify and recompact top 8 inches of existing subgrade and each layer of backfill or fill material at 95 percent.
   2. Under walkways, scarify and recompact top 6 inches below subgrade and compact each layer of backfill or fill material at 92 percent.
   3. Under lawn or unpaved areas, scarify and recompact top 6 inches below subgrade and compact each layer of backfill or fill material at 85 percent.

3.14 GRADING

A. General: Uniformly grade areas to a smooth surface, free from irregular surface changes. Comply with compaction requirements and grade to cross sections, lines, and elevations indicated.
   1. Provide a smooth transition between adjacent existing grades and new grades.
   2. Cutout soft spots, fill low spots, and trim high spots to comply with required surface tolerances.
B. Site Grading: Slope grades to direct water away from buildings and to prevent ponding. Finish subgrades to required elevations within the following tolerances:
   1. Lawn or Unpaved Areas: Plus or minus 1 inch.
   2. Walks: Plus or minus 1 inch.

3.15 FIELD QUALITY CONTROL

A. Testing: The Engineer will perform field quality-control testing. The Contractor may also engage the services of a qualified testing firm to perform field quality-control testing to verify the Engineer's testing results, at no additional cost to the OWNER.

B. Allow Engineer to inspect and test subgrades and each fill or backfill layer. Proceed with subsequent earthwork only after test results for previously completed work comply with requirements.

C. Footing Subgrade: At footing subgrades, at least one test of each soil stratum will be performed to verify design bearing capacities. Subsequent verification and approval of other footing subgrades may be based on a visual comparison of subgrade with tested subgrade when approved by Engineer.

D. Engineer and Contractor's independent firm (if applicable) will test compaction of soils in place according to ASTM D 2922. Tests will be performed at the following locations and frequencies:

   1. Paved and Building Slab Areas: At subgrade and at each compacted fill and backfill layer, at least one test for every 2000 square feet or less of paved area or building slab, but in no case fewer than three tests.

   2. Foundation Wall Backfill: At each compacted backfill layer, at least one test for each 100 feet or less of wall length, but no fewer than two tests.

   3. Utility Structures: At each compacted backfill layer, at least one test for every 100 square feet or less, but no fewer than one test per structure.

E. When Engineer's testing reports that subgrades, fills, or backfills have not achieved degree of compaction specified, scarify and moisten or aerate, or remove and replace soil to depth required; recompact and retest until specified compaction is obtained. Contractor shall be responsible for the cost of repeat testing conducted by the Engineer.

3.16 PROTECTION

A. Protecting Graded Areas: Protect newly graded areas from traffic, freezing, and erosion. Keep free of trash and debris.

B. Repair and reestablish grades to specified tolerances where completed or partially completed surfaces become eroded, rutted, settled, or where they lose compaction due to subsequent construction operations or weather conditions.

   1. Scarify or remove and replace soil material to depth as directed by Engineer; reshape and recompact.

C. Where settling occurs before Project correction period elapses, remove finished surfacing, backfill with additional soil material, compact, and reconstruct surfacing.

   1. Restore appearance, quality, and condition of finished surfacing to match adjacent work, and eliminate evidence of restoration to the greatest extent possible.

3.17 DISPOSAL OF SURPLUS AND WASTE MATERIALS

A. Disposal: Remove surplus satisfactory soil and waste material, including unsatisfactory soil, trash, and debris, and legally dispose of it off Owner's property.

END OF SECTION 31 00 00

SECTION 31 05 13
SOILS FOR EARTHWORK

PART 1 - GENERAL

1.01 SUMMARY

A. Section includes:

1. Subsoil materials.
2. Topsoil materials.

B. Related Sections include:

1. Drawings and general provisions of Contract, including General and Supplementary Conditions, apply to work of this section.
2. Division 1 – General Requirements Specification Sections.
3. Division 31 – Earthwork Specification Sections.

1.02 SUBMITTALS FOR REVIEW

A. See Section 01 33 00 - Submittals: Procedures for submittals.

B. Samples: In accordance with Section 01 40 00.

1.03 QUALITY ASSURANCE

A. Section 01 40 00 - Quality Control: Field Samples.

B. Material Source: Provide materials from the same source throughout the Work. Change of source requires Engineer approval.

PART 2 - PRODUCTS

2.01 ENGINEERED IMPORTED BACKFILL

A. All unsuitable soil materials as identified in Pioneer's 2017 and 2024 Geotechnical Reports (Appendix C) will be replaced with backfill as identified in Montana Public Works Standard Specifications (MPW – 6th Edition) Section Section 02234 – 2.4.A: *4" Minus* as follows:

SIEVE SIZE	PERCENT PASSING
4-inch	100
No. 4	25 - 60
No. 40	10 - 30
No. 200	2 - 10

2.02 SUBSOIL MATERIALS

A. Subsoil: Uncontaminated excavated onsite material or imported borrow material. Graded

free of: lumps larger than 3 inches; rocks larger than 2 inches; and debris.

1. Type A: See MPWSS, latest edition. Existing (Native) soil shall be considered a Type A.
2. Type B: See MPWSS, latest edition.
3. Type C: Non-used; All frozen material, vegetation, trash, rocks, and concrete and bituminous chunks having a dimension exceeding 3 inches.

2.03 TOPSOIL MATERIALS

A. Topsoil: Uncontaminated excavated onsite material or imported borrow material; Graded free of roots, rocks larger than ¾ inches, subsoil, debris, large weeds, and foreign matter.

1. Imported or Re-used; Friable loam. Acidity range (pH) of 5.5 to 7.5 containing a minimum of 4 percent and a maximum of 25 percent organic matter. Conforming to ASTM D2487 Group Symbol OL and OH.

2.04 SOURCE QUALITY CONTROL

A. Section 01 40 00 - Quality Control: Testing and analysis of soil material.

B. Testing and Analysis of Subsoil Material: Perform in accordance with ASTM D698, ASTM D2922, and ASTM D3017.

C. Testing and Analysis of Topsoil Material: Perform in accordance with ASTM D2487.

D. Provide materials of each type from same source throughout the Work.

E. Contractor to obtain and pay for services of soil classification technician from an independent geotechnical laboratory to monitor soils installed.

END OF SECTION 31 05 13

SECTION 31 10 00
SITE CLEARING

PART 1 - GENERAL

1.01 DESCRIPTION

A. This work includes the identification, preparation, removal, stockpiling, salvage and disposal of existing surface materials at the project site which are impacted by or interfere with construction of the improvements.

1.02 RELATED DOCUMENTS

A. The following documents and specification sections apply directly to this Section:

1. Drawings and Special Provisions of the Contract;
2. General and Supplementary Conditions;
3. Division 01 - General Requirements;
4. Division 02 - Existing Conditions;
5. Division 31 - Earthwork;
6. Division 33 - Utilities.

1.03 SUMMARY

A. This Section includes, but not limited to, the following:

~~1. Protecting existing trees and vegetation to remain.~~

2. Removing trees and other vegetation as necessary.
3. Clearing and grubbing.
4. Topsoil stripping.
5. Removing above-grade site improvements.
6. Disconnecting, capping or sealing, and abandoning site utilities in place.
7. Disconnecting and removing site utilities.

1.04 DEFINITIONS

A. Topsoil: Natural or cultivated surface-soil layer containing organic matter and sand, silt, and clay particles; friable, pervious, and black or darker shade of brown, gray, or red than underlying subsoil; reasonably free of subsoil, clay lumps, gravel, and other objects more than 2 inches in diameter; and free of weeds, roots, and other deleterious materials.

1.05 MATERIALS OWNERSHIP

A. Except for materials indicated to be stockpiled or to remain Owner's property, cleared materials shall become Contractor's property and shall be removed from the site.

1.06 PROJECT CONDITIONS

A. Traffic: Minimize interference with adjoining roads, streets, walks, and other adjacent occupied or used facilities during site-clearing operations.

1. Do not close or obstruct streets, walks, or other adjacent occupied or used facilities without permission from Owner and authorities having jurisdiction.

2. Provide alternate routes around closed or obstructed traffic ways if required by authorities having jurisdiction.

B. Salvageable Improvements: Carefully remove items indicated to be salvaged and store on Owner's premises where indicated.

C. Notify utility locator service for area where Project is located before site clearing.

PART 2 - PRODUCTS

2.01 SOIL MATERIALS

A. Satisfactory Soil Materials: Requirements for satisfactory soil materials are specified in Sections 31 00 00 and 31 05 13.

PART 3 - EXECUTION

3.01 PREPARATION

A. Protect and maintain:

1. benchmarks and survey control points;
2. groundwater well;
3. buried and overhead utilities;
4. concrete that is not part of the demolition plan;
5. existing compost facility;

from disturbance during construction.

B. Provide erosion-control measures to prevent soil erosion and discharge of soil-bearing water runoff or airborne dust to adjacent properties and walkways.

C. Locate and clearly flag existing features that are to remain or to be relocated.

D. Protect existing site improvements to remain from damage during construction.

1. Restore damaged improvements to their original condition, as acceptable to Owner.

3.02 UTILITIES

A. Locate, identify, disconnect, and seal or cap off utilities indicated to be removed.

1. Owner will arrange to shut off any publicly-owned utilities indicated to be removed.

2. Contractor shall arrange to shut off any privately-owned utilities with utility companies.

B. Existing Utilities: Do not interrupt utilities serving facilities occupied by Owner or others unless permitted under the following conditions and then only after arranging to provide temporary utility services according to requirements indicated:

1. Notify Engineer not less than two days in advance of proposed utility interruptions.
2. Do not proceed with utility interruptions without Engineer's written permission.

3.03 CLEARING AND GRUBBING

A. Remove obstructions, trees, shrubs, grass and other vegetation to permit installation of new construction. Removal includes digging out stumps and obstructions and grubbing roots.
   1. Do not remove trees, shrubs, and other vegetation indicated to remain or to be relocated.
   2. Cut minor roots and branches of trees indicated to remain in a clean and careful manner where such roots and branches obstruct installation of new construction.
   3. Completely remove stumps, roots, obstructions, and debris extending to a depth of 18 inches below exposed subgrade.
   4. Use only hand methods for grubbing within drip line of remaining trees.
B. Fill depressions caused by clearing and grubbing operations with satisfactory soil material, unless further excavation or earthwork is indicated.
   1. Place fill material in horizontal layers not exceeding 8-inch loose depth, and compact each layer to a density equal to adjacent original ground unless otherwise specified in the Specifications.

3.04 TOPSOIL STRIPPING

A. Remove weeds, debris and grass before stripping topsoil.
B. Strip topsoil to whatever depths are encountered in a manner to prevent intermingling with underlying subsoil or other waste materials.
   1. Strip surface soil of unsuitable topsoil, including trash, debris, weeds, roots, and other materials.
C. Stockpile topsoil materials away from edge of excavations without intermixing with subsoil. Grade and shape stockpiles to drain surface water. Cover to prevent wind-blown dust.
   1. Stockpile surplus topsoil and allow for re-spreading deeper topsoil.

3.05 SITE GRADING

A. Rough-grade the site to provide positive drainage away from all construction elements and away from the site in such a manner that no damage to adjacent property will result from runoff.
   1. Project site shall be graded sufficiently smooth to provide access to all elements of construction.

3.06 SITE IMPROVEMENTS

A. Remove existing above- and below-grade improvements as indicated and as necessary to

facilitate new construction.

B. Remove slabs, paving, curbs, gutters, and aggregate base as indicated.

1. Unless existing full-depth joints coincide with line of demolition, neatly saw-cut length of existing pavement to remain before removing existing pavement. Saw-cut faces vertically.

3.07 DISPOSAL

A. Disposal: Remove surplus soil material, unsuitable topsoil, obstructions, demolished materials, and waste materials, including trash and debris, and legally dispose of them off Owner's property.

END OF SECTION 31 10 00

SECTION 31 11 10
REMOVAL OF EXISTING PAVEMENT, CONCRETE CURB, SIDEWALK, DRIVEWAY, AND/OR STRUCTURES
(Reference MPWSS Section 02112)

All applicable portions of MPW Standard Specification (6th Edition) Section 02112 shall apply with the following additions, deletions, and/or modifications.

PART 3 - EXECUTION

Delete the last sentence of 3.1.C and add the following:

Edges on all concrete and asphalt shall be straight lines and vertical cuts made with a saw. Concrete shall be cut with a saw to a depth of 4 inches minimum. Section deeper than 4 inches may be broken after cutting. Resulting face shall not be flatter than a 1:1 from vertical. Construction methods will not disturb the remaining concrete slabs.

All slabs to remain shall be replaced, if disturbed, at no cost to the owner.

PART 4 - MEASUREMENT AND PAYMENT

DELETE: Entire Section and refer to Section 01 29 00

END OF SECTION 31 11 10

SECTION 31 22 00
GRADING

PART 1 - GENERAL

1.01 SUMMARY

A. Section includes general requirements and procedures for site grading including, but not limited to, the following:

1. Rough Grading
2. Finish Grading
3. Topsoil Placement (compost)

B. Related Sections include:

1. Drawings and general provisions of Contract, including General and Supplementary Conditions, apply to work of this section.
2. Division 01 – General Requirement
3. Division 31 – Earthwork

1.02 DESCRIPTION

A. Contractor shall grade the site as shown on the Drawings. Contours and spot elevations indicate finished surface grades.

B. Construct uniform slopes between contours and spot elevations.

C. Limits of construction are shown on the Drawings as indicated by the fencing boundary. Excavation, placement of fill, or general grading shall not be allowed outside of the limits of construction where shown on the Drawings.

D. Materials may be temporarily stockpiled on the site within the limits of construction or where shown on the Drawings.

E. Topsoil removal and rough grading of the site shall be completed prior to structure erection.

F. Perform finish grading and topsoil placement after structure erection.

G. Protect benchmarks and existing structures that are to remain from damage or displacement.

H. All earthwork shall be performed in a manner and sequence that will provide drainage and proper erosion control at all times.

1.03 FIELD MEASUREMENTS

A. Verify that survey benchmark and intended elevations for the Work are as indicated.

PART 2 - PRODUCTS

2.01 MATERIALS

A. Topsoil: Type S4 as specified in Section 31 05 13.

B. Subsoil Fill: Type S1 or S2 as specified in Section 31 05 13.

C. Engineered Imported Fill: 4" Minus as outlined in MPWSS (6th Edition) Section 02234 – 2.4.A: **4" Minus.** See Sections 31 00 00 and 31 05 13

D. Aggregate Base and Surface Course: Type A3 and A2 respectively as specified in Section 32 05 16 and shown on drawings.

E. Provide source testing data in accordance with Section 01 40 00.

2.02 SOURCE QUALITY CONTROL

A. Conduct the following tests on each material proposed for use prior to start of soils work. Refer to Section 01 40 00 for source test requirements.

PART 3 - EXECUTION

3.01 INSPECTION

A. Verify structure and trench backfilling have been inspected.

B. Verify subgrade base does not contain unsuitable soils and has been contoured and properly compacted.

3.02 PROTECTION

A. Contractor shall conduct all grading operations within the limits of construction where shown on the Drawings, and within the designated grading limits as shown from contours and spot elevations.

B. Protect all existing structures, trees, plantings, turf, and other facilities which are not scheduled for removal

C. Provide proper erosion and sediment control for all grading operation.

D. Repair disturbed areas and compact to required density prior to further work.

E. Remove material contaminated by erosion and runoff, provide new material and compact.

3.03 SUBSTRATE PREPARATION

A. Eliminate uneven areas and low spots.

B. Remove debris, roots, branches, and stones in excess of 2 inches in size. Remove subsoil contaminated with petroleum products.

C. Scarify surface to depth of 3 inches where topsoil is scheduled. Scarify in areas where equipment used for hauling and spreading topsoil has compacted subsoil.

3.04 ROUGH GRADING

A. Uniformly grade areas within limits of grading under this Section, including adjacent transition areas. Smooth finish surface within specified tolerances, compact with uniform levels or slopes between points where elevations are shown, or between such points and existing grades.

B. Grade surface of fill under structures and slabs to required density, free of voids, and to required elevations.

C. Rough grade areas adjacent to structure lines to drain away from structures and to prevent ponding or increase in soil lateral pressure on the structure.

3.05 FINISH GRADING

A. Contractor shall provide the degree of finish grading that will be normally obtainable through the use of suitable equipment operated under favorable conditions and by an experienced operator. Deviations from the required tolerance shall be corrected by the Contractor at no additional cost to the Owner.

3.06 TOPSOIL PLACEMENT

A. Place topsoil in areas where seeding and restoration is required to a nominal depth of 6 inches. Place topsoil during dry weather.

B. Use imported topsoil as a supplement to stockpiled topsoil only when a 6-inch depth is unable to be maintained.

C. Drag topsoiled areas to remove wheel tracks and provide a uniform texture and appearance.

D. Place fine grade topsoil to eliminate rough or low areas. Maintain profiles and contour of subgrade. Finish grades shall allow for proper drainage without ponding.

E. Remove roots, weeds, rocks, and foreign material while spreading.

F. Manually spread topsoil close to plant life and buildings to prevent damage.

G. Lightly compact placed topsoil.

H. Remove surplus subsoil and topsoil from site. Contractor shall pay for loading, hauling, and spreading of all excess topsoil materials removed from the site or placed and spread on-site by direction of Owner or Engineer.

I. Contractor shall pay for additional topsoil that is required at the site, including providing transporting and placing topsoil.

J. Leave stockpile area and site clean and raked, ready to receive landscaping.

3.07 TOLERANCES

A. Top of Topsoil: Plus or minus 1 inch.

END OF SECTION 31 22 00

SECTION 31 23 13
SUBGRADE PREPARATION

PART 1 - GENERAL

1.01 SUMMARY

A. Section Includes:

1. Scarifying, compacting and shaping the earth subgrade.
2. Perform subgrade preparation on all areas to receive concrete pavement, bituminous pavement, aggregate base course, and/or aggregate surface course.

B. Related Sections:

1. Drawings and general provisions of Contract, including General and Supplementary Conditions, apply to work of this section.
2. Division 1 – General Requirements Specification Sections.
3. Division 31 – Earthwork Specification Sections

PART 2 - PRODUCTS

2.01 SOIL MATERIALS

A. Unsuitable fill materials (woody, organic debris) at the project site are underlain by native materials consisting of poorly-graded gravels with sand and cobbles with varying amounts of silt. These *underlying native* materials are suitable to support the proposed structures.

B. Imported granular soil fill (Engineered Fill) will be required to bring the site grade up to the desired elevations after removal of the unsuitable materials. See MPW Section 02234 – 2.4.A: **4" Minus** will be accepted as Engineered Fill.

C. Suitable Subgrade Soil Materials: On-Site material or imported material meeting subsoil classification GW, GM, ML, SC, SW, SP, SM, S1, S2, or S3 or a combination of these group symbols, free of particles larger than 4" in any dimension, debris, waste, frozen materials, vegetation, clayey soils and other deleterious matter, as defined in Section 31 00 00.

PART 3 - EXECUTION

3.01 GENERAL

A. The contractor shall follow the recommendations as provided in the 2017 and 2024 Geotechnical Reports by Pioneer Technical Services. The Geotechnical Investigation Reports are included in **Appendix C** of this Project Manual.

B. Subgrade Preparation shall consist of producing a firm and stable subgrade prior to placement of the surface or base course.

3.02 SUBGRADE PREPARATION

A. The Contractor shall compact and shape the subgrade for its full width as may be necessary to produce, at the time the base course is placed, the required density in the upper 12" of the base and the required grade and cross-section.

B. If areas are encountered that cannot be compacted, sub-excavate unstable materials and replace with materials that can be compacted.

C. Contractor shall be responsible for drying the subgrade soil or applying water as may be necessary to obtain the required density. Contractor shall also be responsible for grading the Work area and providing drainage so that accumulating water will drain away from the subgrade.

D. The finished subgrade surface shall be smooth and uniform and shall not rut, shove, flex, or displace when any construction equipment is placed on it.

E. The required grade and cross-section for subgrades shall consist of a smooth subgrade surface that conforms to the prescribed elevations for the particular subgrade being prepared, prior to constructing an additional course thereon. The required grade and cross-section for rough graded surfaces shall consist of a smooth graded surface that conforms to the prescribed elevations for that particular rough grade being prepared. The prescribed elevation for any point on the subgrade or rough graded surfaces shall be as determined from the grades staked by the Engineer.

F. Repair and reestablish grades to specified tolerances where completed or partially completed surfaces become eroded, rutted, settled, or lose compaction due to subsequent construction operations, vehicular traffic, or weather conditions.

G. Subgrade preparation shall apply to all mat foundations, pipe trenches, concrete slabs, paved and graveled areas, including roads, driveways, parking areas, and sidewalks.

H. Testing requirements for subgrade preparation shall be as follows:

1. Shall conform to requirements of Section 01 40 00.

3.03 SPECIAL REQUIREMENTS

A. Only hand-operated compaction equipment should be used within 5 feet of walls.

B. Final subgrade elevation improvements for mat foundations should be smoothed using a vibratory plate, care shall be taken to prevent pumping of subgrade.

3.04 TOLERANCES

A. Finish subgrade or rough graded surfaces shall not deviate by more than 1 inch from the required section and grade.

END OF SECTION 31 23 13

SECTION 31 23 16
EXCAVATION

PART 1 - GENERAL

1.01 SUMMARY

A. Section includes:

1. Requirements for Excavation.
2. Subgrade Preparation.
3. Common Excavation.
4. Structural Excavation.
5. Estimated Excavation Quantities.
6. Disposal.

B. Related Sections:

1. The General Conditions, Supplementary Conditions, and General Requirements apply to work of this section.
2. Division 1 – General Requirements Specification Sections.
3. Division 31 – Earthwork Specification Sections.

1.02 REFERENCES

A. American Society for Testing and Materials (ASTM).

B. Montana Public Works Standard Specifications (MPWSS), latest edition.

1.03 SUBMITTALS

A. Submit the following in accordance with Section 01 33 00:

1. Test Results: Prior to start of work, submit written reports for each material required to be sampled and tested. Include project identification, date of report, name of contractor, name of testing laboratory, source of material, manufacturer and brand name for manufactured products, specification requirements for each material, and corresponding test results.
   a. Tests must have been taken no more than 180 calendar days before Notice to Proceed.
2. Product Data: Information on manufactured products indicating compliance with requirements of this Section.

1.04 DEFINITIONS

A. Utility: Any buried pipe, duct, conduit, or cable.

B. Structures: Existing and new construction, including slabs, buildings, tanks, and structural elements and systems.

C. Acceptable Materials: Material that will provide for the indicated soil bearing capacity, soil densities, material requirements and that, in the opinion of soil testing laboratory, will not be subject to future decomposition, settlement, subsidence, expansion and are otherwise of the required soil type.

D. Unsuitable Materials: Material that will not provide for the indicated soil bearing capacity and soil densities and that in the opinion of the soil testing laboratory will be subject to future decomposition, settlement, subsidence, expansion, and are otherwise not of the required soil type. See Section 31 05 13.

E. Soil Testing Laboratory: Refers to professional soils engineering firm with soil sampling and testing services and that is independent from the Contractor. The soil testing laboratory's engineer shall be licensed in the State of Montana.

F. Prepared Ground Surface: Ground surface after completion of clearing and grubbing, topsoil removal, excavation to grade, and scarification and compaction of subgrade.

1.05 SITE CONDITIONS

A. Soil borings were taken for this project by Pioneer Technical Services, Inc. The Geotechnical Investigation Reports (2017 and 2024) are included in **Appendix C** of this Project Manual

B. Data indicated on the subsurface conditions are not intended as representations, warranties of accuracy, or continuity between soil borings. It shall be expressly understood that Owner and Engineer shall not be responsible for interpretations or conclusions drawn from these reports by the Contractor. The information is made available for the convenience of the Contractor and is in no way, shape, or form considered a part of this Contract.

C. Contractor shall determine to Contractor's own satisfaction the nature and location of subsurface obstacles and the nature of soil and water conditions which will be encountered during the work.

D. Contractor may perform additional test borings or other exploratory operations at Contractor's own expense. Contractor shall make arrangements for any additional soils investigation with Owner.

E. No claim for additional payment will be accepted due to the nature of subsurface conditions in which the work is to be performed.

F. Do not commence construction of structure foundation until soil test results are confirmed.

G. See Geotechnical Excavation Report by Thomas, Dean & Hoskins and associated Addenda, Inc. for recommended soil bearing capacities for footings and structures.

1.06 CONVENTIONAL QUALITY ASSURANCE

A. Source Quality Control Testing: Retain the services of an independent soil testing laboratory for Source Quality Control sampling and testing.

B. Materials and installed work may require testing and retesting, as required by Engineer, at any time during progress of work.

C. Allow free access of testing laboratory to material stockpiles and facilities at all times.

D. Tests including retesting of rejected materials and installed work shall be at Contractor's own expense unless otherwise indicated.

E. See Section 01 40 00 for additional requirements.

1.07 SEQUENCING AND SCHEDULING

A. Additional excess material shall be stockpiled in accordance with Section 31 00 00.

1.08 DELIVERY, STORAGE, AND HANDLING

A. Stockpile delivered materials and excavated materials at locations approved by Owner until required for backfill or fill. Place, grade, and shape stockpiles for drainage.

B. Store materials in manner that will not impose additional loading and soil pressure on excavation limits and structures.

1.09 PAYMENT

A. The volume of all excavation, removal and stockpiling of unsuitable material shall be calculated based on un-disturbed in-place volume. The CONTRACTOR shall conduct a topographic survey of the project site immediately before excavation occurs and again when all unsuitable soils have been removed. Pay volume (in yd^3) for excavation will be the difference between the two surveys. *Alternately, the CONTRACTOR may propose a pay quantity based on bank cubic yards (BCY) and loose cubic yards (LCY) hauled, provided the method for calculating swell for the unsuitable material is proven through detailed measurement. Payment based on LCY will take into account the swell factor (default 45%) and appropriate conversion of the pay quantities outlined in the Bid Form – Section 00 41 00.*

B. No claim for additional payment will be accepted for excavation and fill for all structures required for removal of unsuitable material of up to three (3) feet below bottom of foundation or one (1) feet below noted structural fill or backfill or one foot below minimum excavation limit as noted on Drawings, whichever results in the greater excavation and fill.

C. Excavation and fill required for removal of unsuitable material deeper than the above limits will be paid for on a cubic yard basis if conditions found in the Geotechnical Report are found to differ from actual conditions experienced on site. No additional payment will be made for conditions reflected in the Geotechnical Report.

D. No claim for additional payment will be accepted for repairs made to subgrade due to weather related problems.

1.10 FIELD MEASUREMENTS

A. Survey benchmarks, control points, and intended elevations for the Work are as shown on the Drawings or will be provided by the Engineer.

1.11 COORDINATION

A. Coordinate work under provisions of Section 01 31 13.

B. Verify work associated with lower elevation utilities is complete before placing higher elevation utilities.

C. Contractor shall excavate for structures, pipe, and utilities at grades shown on the Drawings. Careful consideration shall be given to whether elevations shown are invert elevations or centerline elevations, Contractor shall make appropriate adjustment depending on elevation shown.

PART 2 - PRODUCTS

2.01 EXCAVATION MATERIALS

A. See Section 31 05 13 for materials specifications.

2.02 SOURCE QUALITY CONTROL

A. See Section 31 05 13 and Section 01 40 00 for material quality testing requirements.

PART 3 - EXECUTION

3.01 INSPECTION

A. Examine project site and conditions under which work of this Section is to be performed.

B. Contractor shall verify which native materials are suitable for reuse at the site. Provide testing data as required and keep materials separated.

C. Notify Engineer of any unsuitable materials.

D. Do not over excavate without authorization from Engineer.

3.02 PREPARATION

A. An OSHA approved competent person shall review the above-mentioned soil classification in the field. Excavations shall comply with the requirements of OSHA 29 CFR, Part 2926, Subpart P, "Excavations and Trenches." Excavation safety is the responsibility of the Contractor. All excavations greater than 20 feet in depth shall be designed by a registered Professional Engineer.

B. Protection

1. Locate existing utilities in areas of work. Protect utilities that are to remain.

2. Protect structures from damage and from damage caused by groundwater, surface water, flood or floatation forces, lateral movement, settlement, undermining, washout, and other undesirable conditions created by the work.

a. Maintain drainage when drainage ways are obstructed by earthwork and related operations.

3. Protect areas beyond construction zone with erosion control system.

4. Do not interrupt existing utilities serving facilities occupied and used by Owner or others, except when allowed by utility owner and then only after acceptable temporary utility services have been provided.
    a. Provide temporary services, complying with Federal, State and local laws and regulations, and as acceptable to Owner, during any interruptions.
5. Maintain full access to structure exits and entrances, fire hydrants, street crossings, sidewalks, and other points as designated by Owner to prevent significant interruption of accessibility.
6. Do not bring explosives on site or use in work.
7. Maintain excavations and stockpiles to prevent caving, heaving, slides, and increased soil pressures on adjacent and underlying structures.
8. Maintain existing site drainage ways or provide new paths of drainage for site as required to perform earthwork.

C. Dry subgrade: Add water, then mix to make moisture content uniform throughout.

D. Wet subgrade: Aerate material by blading, discing, harrowing, or other methods to hasten drying process.

E. Excavation support: Install and maintain, as specified in Section 31 41 00, Shoring, as necessary to support sides of excavations and prevent detrimental settlement and lateral movement of existing facilities, adjacent property, and completed Work.

3.03 PROTECTION

A. Locate existing utilities in areas of work. Protect utilities that are to remain.

B. Protect structures from damage and from damage caused by groundwater, surface water, flood or floatation forces, lateral movement, settlement, undermining, washout, and other undesirable conditions created by the work.
    1. Maintain drainage when drainage ways are obstructed by earthwork and related operations.

C. Do not interrupt existing utilities serving facilities occupied and used by Owner or others, except when allowed by utility owner and then only after acceptable temporary utility services have been provided.
    1. Provide temporary services, complying with Federal, State and local laws and regulations, and as acceptable to Owner, during any interruptions.

D. Protect areas that have been finish graded from subsequent construction operations, traffic, and erosion.
    1. Install erosion control protection along perimeter of unfinished areas.

E. Maintain full access to structure exits and entrances, fire hydrants, street crossings, sidewalks, and other points designated by Owner to prevent significant interruption of accessibility.

F. Do not bring explosives on site or use in work.

G. Maintain excavations and stockpiles to prevent caving, heaving, slides, and increased soil pressures on adjacent and underlying structures.

H. Repair disturbed areas and compact to required density prior to further work.

I. Remove material contaminated by erosion and runoff, provide new material and compact.

3.04 COMMON EXCAVATION

A. Excavate designated areas to the proposed subgrade elevations indicated on the Drawings.

B. Contractor shall advise Engineer immediately if any unsuitable materials are encountered during excavation. Unsuitable materials shall be reasonably separated from re-usable materials and shall be considered surplus material at no additional cost to the Owner.

C. If Contractor encounters excess excavation materials which meet the requirements of common fill as specified herein, Contractor may use those materials as common fill. Contractor shall verify with soils testing laboratory suitability of the use of on-site material.

3.05 STRUCTURAL EXCAVATION

A. Remove unsuitable materials in accordance to the depth recommended by soils testing laboratory beneath structures to obtain the design bearing capacity.

1. Do not bear any structure partially on bedrock and partially on more compressible soils. Remove bedrock materials and replace them with clean compacted sand or gravel in accordance to the Geotechnical Report. The minimum depth of compacted sand or gravel is 6-inches.

2. Do not bear any structure on wet sandy or clay material. Over-excavate as necessary to place slab base course and replace with compacted granular fill (MPW 4" Minus) compacted to the requirements in Section 01 40 00.

3. Dewater excavations for special inspector to observe and determine excavation limits.

4. When bottoms of excavations are approved by soils testing laboratory, but are slightly unstable only in relation to Contractor operations or convenience, Contractor may provide a compacted gravel course utilizing materials acceptable to the soil testing laboratory. Such work shall be considered for the Contractor's convenience and at Contractor's own expense.

B. Slope sides of excavations as required to provide stability and to comply with Federal, State and local laws and regulations. Shore and brace excavation when required by project conditions.

1. Utilize cofferdams, steel sheet piling, shoring, underpinning, and other systems required to prevent damage to existing structures, settlement, slope stability problems, and undermining.

2. Remove construction related protection systems after their need is complete, in a manner that will not loosen or damage soils, create slope stability problems, and otherwise damage existing and new structures.

    a. Leave construction-related protection systems in place when their removal would create potential for damage to the soil conditions or to structures.

C. Excavate to required elevations and dimensions within a tolerance of plus or minus 1 inch, and extending a sufficient distance as required to provide for the work, completion of the structures, observation, and testing.

1. When excavating for footings and foundations, do not disturb soil materials at and below excavation limits. Excavate by hand when necessary to prevent damage to soil materials that will remain.

2. Trim bottoms to required lines and grades to leave solid dense base of required bearing capacity.

3. Final removal limits shall be approved by soil testing laboratory prior to concrete placement.

D. Removal of materials beyond required subgrade elevations or dimensions without specific approval of soils testing laboratory as well as backfilling, compaction and remedial work recommended by soils testing laboratory at the over-excavated area shall be at Contractor's own expense.

1. Under structures and their components fill unauthorized excavation utilizing one of the following systems:

    a. Extend indicated bottom elevation of footing or base to excavation bottom, without altering required top elevation.

    b. Install lean concrete fill to bring elevations to required position.

    c. Fill and compact unauthorized excavations with soil materials and to required density.

2. Elsewhere, backfill and compact unauthorized excavations as indicated for authorized excavations of same classification

E. Protect excavation bottoms from freezing. Remove frozen materials and provide unfrozen compacted materials prior to placement of materials on them.

F. Excavations of structures shall be widened a minimum of one foot horizontally beyond the outer edges of the building perimeter footings for each foot the excavations extend below bottom-of-footing elevations.

G. It is anticipated the excavation bottom for each structure will consist of sand soils, lean clay or a combination of both. These soils shall be maintained within the prescribed moisture content range until successive layers are placed over them. Thus, if the placement of backfill and fill is slowed or delayed during dry or wet weather, re-conditioning of the placed backfill, fill and natural soils may be necessary.

H. Prior to the placement of engineered fill or construction of structures, any loosened granular materials shall be surface compacted using a vibratory plate compactor. In areas where groundwater is within 3 feet of the subgrade this requirement may be waived in the field by the Engineer if it is found the compaction is pumping up water or creating a temporary "quick" condition and the soils are otherwise suitable for support of the foundations. Areas that yield or pump during surface compaction may require additional subcutting.

3.06 DISPOSAL

A. Unsuitable material removed from the excavation shall be stockpiled on the site.

END OF SECTION 31 23 16

SECTION 31 23 21
FILL AND BACKFILL

PART 1 - GENERAL

1.01 SUMMARY

A. Section includes general requirements and procedures for site grading including, but not limited to, the following:

1. Filling, Backfilling, and Compacting.

B. Related Sections include, but are not limited to:

1. The General Conditions, Supplementary Conditions, and General Requirements apply to work of this section.
2. Division 1 – General Requirements
3. Division 31 – Earthwork

1.02 REFERENCES

A. Montana Public Works Standard Specifications (MPWSS) specifications are referenced for material requirements and specific construction requirements only.

1.03 DESCRIPTION

A. Limits of construction are shown on the Drawings. Placement of fill shall not be allowed outside the fence boundary where shown on the Drawings unless location is authorized by the Owner.

B. Materials may be temporarily stockpiled on the site within the limits of construction, or where shown on the Drawings.

C. Excess materials shall be stockpiled on site at locations authorized by Owner.

D. Protect benchmarks and existing structures that are to remain from damage or displacement.

1.04 DEFINITIONS

A. Suitable Material: Material that will provide the indicated required soil bearing capacity, soil densities, material requirements or, in the opinion of the soils testing laboratory, will not be subject to future decomposition, subsidence, settlement, or expansion.

B. Structures: Existing and new construction, including slabs, buildings, footings, tanks, and other structural elements.

C. Relative Compaction:

1. Ratio, in percent, of as-compacted field dry density to laboratory maximum dry density as determined in accordance with ASTM D1557.
2. Apply corrections for oversize material to either as-compacted field dry density or maximum dry density, as determined by the Engineer.

D. Optimum Moisture Content:

1. Determined in accordance with ASTM standard specified to determine maximum dry density for relative compaction.

2. Determine field moisture content on basis of fraction passing ¾-inch sieve.

E. Relative Density: Calculated in accordance with ASTM D4254 based on maximum index density determined in accordance with ASTM D4253 and minimum index density determined in accordance with ASTM D4254.

F. Complete Course: A course or layer that is ready for next layer or next phase of Work.

G. Lift: Loose (uncompacted) layer of material.

H. Well-Graded:

1. A mixture of particle sizes with not specific concentration or lack thereof of one or more sizes.

2. Does not define numerical value that must be placed on coefficient of uniformity, coefficient of curvature, or other specific grain size distribution parameters.

3. Use to define material type that, when compacted, produces a strong and relative incompressible soil mass free of detrimental voids.

I. Influence Area: Are within planes sloped downward and outward at 60-degree angle from horizontal measured from:

1. 1 foot outside outermost edge at base of foundations or slabs.

2. 1 foot outside outermost edge at surface of roadways or shoulder.

3. 0.5 foot outside exterior of spring line of pipes.

J. Borrow material: Material from required excavations or from designated borrow areas on or near Site.

K. Select Backfill Material: Materials available on-site that Engineer determines suitable for specific use.

A. Imported Material: Materials obtained from sources offsite, suitable for specified use. Imported Engineered Fill shall consist of materials meeting the 4" minus gradation criteria identified in Montana Public Works Standard Specifications (MPW – 6th Edition) Section 02234 – 2.4.A: *4" Minus* as follows:

SIEVE SIZE	PERCENT PASSING
4-inch	100
No. 4	25 - 60
No. 40	10 - 30
No. 200	2 - 10

1.05 SITE CONDITIONS

A. Soil borings were taken for this project by Pioneer Technical Services. The Geotechnical Investigation Reports from 2017 and 2024 are included in **Appendix C** of this Project Manual.

B. Data indicated on the subsurface conditions are not intended as representations, warranties of accuracy, or continuity between soil borings. It shall be expressly understood that Owner and Engineer shall not be responsible for interpretations or conclusions drawn from these reports by the Contractor. The information is made available for the convenience of the Contractor and is in no way, shape, or form considered a part of this Contract.

C. Contractor shall determine to Contractor's own satisfaction the nature and location of subsurface obstacles and the nature of soil and water conditions which will be encountered during the work.

D. Contractor may perform additional test borings or other exploratory operations at Contractor's own expense. Contractor shall make arrangements for any additional soils investigation with Owner.

E. No claim for additional payment will be accepted due to the nature of subsurface conditions in which the work is to be performed.

F. Do not commence construction of structure foundation until soil test results are confirmed.

1.06 SEQUENCING AND SCHEDULING

A. Backfill against concrete structures only after concrete has attained compressive strength, specified in Section 03 30 00, Cast-In-Place Concrete. Obtain Engineer's acceptance of concrete work and attained strength prior to placing backfill.

B. Construction of grade-supported slabs shall not occur immediately after below- grade walls are backfilled, so that post-compaction consolidation of the compacted backfills can be monitored to estimate how much the slabs could settle. Monitoring shall include the placement of grade stakes around the structure that shall be monitored weekly after construction. Results shall be reviewed by the Engineer to evaluate the rate at which post-construction settlements will occur. Settlement is estimated to be complete in less than 90 days.

1.07 PAYMENT

A. All excavation, removal, and disposal of earth, peat, muck, and other materials; erosion control; sheeting, shoring, and bracing; fill and backfill, placement, compaction, grading, source quality testing; stockpiling; and all other work under this Section shall be compensated in accordance with the Bid Form, and Sections 01 29 00 and 31 23 16.

B. Excavation and fill required for removal of unsuitable material deeper than the above limits will be paid for on a ***bank*** cubic yard basis if conditions found in the Geotechnical Report are found to differ from actual conditions experienced on site. No additional

payment will be made for conditions reflected in the Geotechnical Report.

C. No claim for additional payment will be accepted for repairs made to subgrade due to weather related items.

1.08 FIELD MEASUREMENTS

A. Verify that survey benchmark, control point, and intended elevations for the Work are as shown on Drawings or will be provided by the Engineer.

1.09 FIELD QUALITY CONTROL

A. Section 01 40 00 - Quality Control: Field inspection and testing.

B. Compaction testing will be performed in accordance with ASTM D698, and ASTM D2922.

C. If tests indicate Work does not meet specified requirements, remove Work, replace, compact, and retest at no additional cost to Owner.

1.10 COORDINATION

A. Coordinate work under provisions of Section 01 31 13.

B. Verify work associated with lower elevation utilities is complete before placing higher elevation utilities.

C. Contractor shall excavate for piping and utilities at grades shown on the Drawings. Careful consideration shall be given to whether elevations shown are invert elevations or centerline elevations, Contractor shall make appropriate adjustment depending on elevation shown.

PART 2 - PRODUCTS

2.01 MATERIALS

A. Backfill around Structures: Backfill shall be as indicated on the Construction Drawings.

PART 3 - EXECUTION

3.01 PREPARATION

A. Identify required lines, levels, contours, and datum locations.

B. Notify utility company to locate utilities.

C. Protect plant life, lawns, and other features remaining as a portion of final landscaping.

D. Protect benchmarks, existing structures, fences, sidewalks, paving, and curbs from excavating equipment and vehicular traffic.

E. Maintain and protect above and below grade utilities that are to remain.

F. Contractor shall verify which native materials are suitable for reuse as granular foundation, bedding, encasement, and backfill material at the site. Provide testing data as required and keep materials separated.

G. Notify Engineer of any unsuitable materials or poor subgrade conditions.

H. Notify Engineer when structure or tank is ready for backfilling, and whenever backfilling operations are resumed after a period of inactivity.

I. Dewater excavations during backfilling at no cost to Owner.

J. Dewater and dry saturated materials suitable for backfill at no cost to Owner.

K. Compact subgrade to density requirements for subsequent backfill materials.

L. Cut out soft areas of subgrade not capable of compaction in-place. Backfill with Type A or Type B fill and compact to density equal to or greater than requirements for subsequent fill material.

M. Identify soft spots; fill and compact to density equal to or greater than requirements for subsequent fill material.

3.02 STOCKPILING OF MATERIALS

A. Stockpile according to Section 31 23 16.

3.03 FILLING, BACKFILLING, AND COMPACTING

A. The contractor shall follow the recommendations as provided in the Geotechnical Report by Pioneer Technical Services for imported Engineered Fill, placement and compaction.

B. Surface compact excavations prior to installing fill material.

C. Proof roll subgrade areas, where noted with, as a minimum, a tandem axle dump truck loaded to at least 25 ton weight. Truck shall traverse the structure footprint to detect areas of loose or soft soils. Loose or soft soils shall be defined as soils exhibiting "excessive rutting" from the truck tires (approximately one (1) inch wheel rut depth.

D. Do not place material on muddy surfaces, frozen ground or on materials containing frost or ice.

E. Do not place fill required below structures until soil conditions encountered have been approved by special inspector.

F. Slope grade away from structures minimum 2 inches in 10 feet, unless noted otherwise.

G. Do not place material on or in water.

H. Do not proceed with backfilling of excavations until completion of the following:

1. Observation, testing, approval, and recording of locations of underground utilities.
2. Removal of concrete formwork.
3. Removal of shoring, bracing, other protection systems, and backfilling and compaction of voids left by their removals.
4. Removal of unsuitable materials, construction related debris, and excess materials.
5. Walls, including interior walls that brace exterior walls and intermediate floors and roof construction is installed, cured, and obtained required 28- day compressive

strength.

6. When existing in-place soil materials are of density less than that specified, but the soil material is acceptable, perform removal, filling, discing of ground surface, moisture-conditioning to within acceptable limits of the optimum moisture content, and compact to provide specified density and bearing capacity as recommended by soils testing laboratory.

I. Placement and Compaction

1. Place materials in compacted layers of thickness required to obtain specified soil densities. Layers shall not exceed 8 inches in loose depth for cohesive and cohesionless soil material, respectively, compacted by heavy compaction equipment and not more than 8 inches in loose depth for cohesive and cohesionless soil materials, respectively, compacted by hand operated tampers unless soil density tests substantiate specified densities will be obtained when material is placed in thicker lifts.
2. Place material in lifts uniformly to the same approximate elevation, not exceeding the final grade height, in manner required to prevent creation of unbalanced soil lateral pressures, wedging action of materials and soil pressures that exceed the design lateral soil conditions and to prevent damage to the structure.
3. Moisten or aerate each layer to the extent required to obtain the optimum moisture content required for the indicated compaction density. Prevent free water from appearing on surface during or subsequent to compaction operations.
4. Remove and replace with acceptable material, or scarify and air dry otherwise acceptable soil material that is too wet to obtain specified soil density. Assist drying by discing, harrowing, or pulverizing, until moisture content is reduced to value required for compaction.
5. Compact each layer to the required density specified for each area classification. Hand tamp or utilize hand operated vibratory equipment when required to compact material placed immediately adjacent to walls within 5 feet.
6. Do not place additional layers until density of each layer in place complies with compaction requirements. Perform corrective work as required to obtain required density. Cost associated with correction work and retesting at failed test locations shall be at Contractor's expense.
7. At door stoops place sand cushion to cross-section indicated on Drawings.

3.04 REPLACING OVEREXCAVATED MATERIAL

A. Replace excavation carried below grade lines shown or established by the Engineer as follows:

1. Beneath Existing Footings: Concrete of strength equal to respective footing.
2. Beneath Fill or Backfill: Same material as specified for overlying fill or backfill.

3. Beneath Slabs on Grade: Aggregate fill.
4. Permanent Cut Slopes (Where overlying area is not to receive fill or backfill):
    a. Flat to Moderate Steep Slopes (3:1 or flatter): Common fill.
    b. Steep Slopes:
        i. Correct over-excavation by transitioning between overcut areas and designed slope adjoining areas, providing such cutting does not extend offsite or outside easements and right-of-ways, or adversely impacts existing facilities or competed Work.
        ii. Backfilling over-excavated areas is prohibited, unless in Engineer's opinion, backfill will remain stable, and over-excavated material is replaced as compacted common fill.

3.05 PLACING FILL OVER GEOSYNTHETICS

A. General:
    1. Place fill over geosynthetics with sufficient care so as not to damage them.
    2. Place fill only by back dumping and spreading only.
    3. Dump fill only on previously placed fill.
    4. While operating equipment, avoid sharp turns, sudden starts and stops that could damage geosynthetics.
B. Hauling: Operate hauling equipment with a minimum 3 feet of covering.
C. Spreading:
    1. Spreading equipment shall be track mounted low ground pressure, D-3 or lighter.
    2. Operate spreading equipment on minimum of 12-inches of fill.
    3. Spread fill in same direction as unseamed overlaps to avoid separation.
    4. Limit distance material falls to maximum of 2 feet.
    5. Flatten wrinkles in direction of spreading.
    6. Maintain proper overlap of unseamed.
    7. Avoid overstressing material and seams.
D. Geosynthetics Damage:
    1. Mark punctures, tears, or other damage, so repairs can be made.
    2. Clear overlying fill as necessary to repair damage.

3.06 COMPACTION REQUIREMENTS

A. Compact materials as required in Section 01 40 00.
B. Contractor shall re-compact all areas represented by failed density tests at their own expense.

3.07 TOLERANCES

A. Finished Grade:

1. Plus or minus 1 inch, upon completion of settlement in ditches, berms, and lawn areas.

2. Plus or minus 1 inch upon completion of settlement in roadways and driveways.

B. All areas that receive fill or backfill shall be kept within settlement tolerances through the warranty period.

3.08 PROTECTION OF FINISHED WORK

A. Protect finished Work under provisions of Section 01 50 00.

B. Reshape and re-compact fills subjected to vehicular traffic during construction.

3.09 SETTLEMENT

A. The Contractor shall be responsible for all settlement of backfill, fills, and embankments which may occur within the correction period stipulated in the Supplementary Conditions.

B. The Contractor shall make, or cause to be made, all repairs or replacements made necessary by settlement within 30 days after notice from the Engineer or Owner, or sooner if required by Engineer or Owner, depending on the critical nature of the settlement.

3.10 SCHEDULE

A. Beneath Landscaped Areas:

1. Type A or B, to a minimum of 6 inches and a maximum of 18 inches below finish grade, compacted as specified in Section 01 40 00.

B. Beneath all concrete wall footings and concrete slabs on grade: compost; biofilter; equipment; working apron; biosolids bin; pre-compost containment bin; rumble grate trough slabs:

1. Material: As indicated on the Construction Drawings.

2. Compacted Thickness: Equal, continuous layers not exceeding 8 inches compacted thickness. In the upper 12 inches of soil below the structures place compacted lifts no greater than 8 inches.

3. Place Geogrid and Goetextile fabric as shown in the Drawings.

4. Compaction: minimum 95% (ASTM D698) as specified in Section 01 40 00.

C. Fill to Correct Over-excavation:

1. Fill Type A, B as specified in Section 31 05 13, or granular material as specified in Section 32 05 16 as indicated on the Construction Drawings, flush to required elevation, compacted as specified in Section 01 40 00.

D. Sub-base Preparation:

1. As indicated on the Construction Drawings, Fill Type A or B as specified in Section 31 05 13, compacted in Section 01 40 00.

E. Beneath Asphalt:

1. Compact Subsoil as specified in Section 01 40 00.
2. As indicated on the Construction Drawings, Fill Type A or B as indicated on the Construction Drawings, compacted as specified in Section 01 40 00.

F. Topsoil Fill:

1. See Section 31 05 13.

END OF SECTION 31 23 21

SECTION 31 23 33
TRENCHING AND BACKFILLING

PART 1 - GENERAL

1.01 SUMMARY

A. Section includes:

1. Excavating trenches for utilities.
2. Compacted bedding and fill of utilities to subgrade elevations.
3. Backfilling and compaction requirements for trenches.

B. Related Sections include, but are not limited to:

1. The General Conditions, Supplementary Conditions, and General Requirements apply to work of this section.
2. Division 1 – General Requirements
3. Division 31 – Earthwork

1.02 DEFINITIONS

A. Utility: Any buried pipe, duct, conduit, or cable.

B. Soil Testing Laboratory: Refers to a professional soils engineering firm with soil sampling and testing services that is independent from the Contractor.

C. Suitable Material: Material that will provide the indicated required soil bearing capacity, soil densities, material requirements or, in the opinion of the soils testing laboratory, will not be subject to future decomposition, subsidence, settlement, or expansion.

D. Structures: Existing and new construction, including slabs, buildings, footings, tanks, and other structural elements.

1.03 SITE CONDITIONS

A. Soil borings were taken for this project by Pioneer Technical Services. The Geotechnical Investigation Reports from 2017 and 2024 are included in **Appendix C** of this Project Manual.

B. Data indicated on the subsurface conditions are not intended as representations, warranties of accuracy, or continuity between soil borings. It shall be expressly understood that Owner and Engineer shall not be responsible for interpretations or conclusions drawn from these reports by the Contractor. The information is made available for the convenience of the Contractor and is in no way, shape, or form considered a part of this Contract.

C. Contractor shall determine to Contractor's own satisfaction the nature and location of subsurface obstacles and the nature of soil and water conditions which will be encountered during the work.

D. Contractor may perform additional test borings or other exploratory operations at Contractor's own expense. Contractor shall make arrangements for any additional soils investigation with Owner.

E. No claim for additional payment will be accepted due to the nature of subsurface conditions in which the work is to be performed.

F. Do not commence construction of structure foundation until soil test results are confirmed.

1.04 ADDITIONAL PAYMENT

A. All excavation, removal, and disposal of earth, peat, muck, and other materials; erosion control; sheeting, shoring, and bracing; fill and backfill, placement, compaction, grading, source quality testing; stockpiling; and all other work under this Section shall be considered incidental to the Project and no claim for additional compensation of extra ***trenching*** work will be accepted.

B. No claim for additional payment will be accepted for excavation and fill for all structures and improvements required for removal of unsuitable material up to two (2) feet below bottom of proposed piping invert elevation or one (1) foot below bottom of noted structural fill or one (1) foot below minimum excavation limit as noted on the Drawings, whichever results in the greater excavation and fill.

C. Excavation and fill required for removal of unsuitable material deeper than the above limits will be paid for on a cubic yard basis if conditions found in the Geotechnical Report are found to differ from actual conditions experienced on site. No additional payment will be made for conditions reflected in the Geotechnical Report.

D. No claim for additional payment will be accepted for repairs made to subgrade due to weather related items.

1.05 FIELD MEASUREMENTS

A. Verify that survey benchmark, control point, and intended elevations for the Work are as shown on Drawings.

1.06 COORDINATION

A. Coordinate work under provisions of Section 01 31 13.

B. Verify work associated with lower elevation utilities is complete before placing higher elevation utilities.

C. Contractor shall excavate for piping and utilities at grades shown on the Drawings. Careful consideration shall be given to whether elevations shown are invert elevations or centerline elevations, Contractor shall make appropriate adjustment depending on elevation shown.

PART 2 - PRODUCTS

2.01 GENERAL

A. Granular materials provided for foundation, bedding, encasement, and backfill or other purposes shall consist of any natural or synthetic mineral aggregate such as sand, gravel, crushed rock, or slag that shall meet the meet the gradation requirements specified herein for each specific use.

B. Granular materials provided for foundation, bedding, encasement, or backfill use shall be classified by use in accordance with the following requirements.

2.02 GRANULAR FOUNDATION

A. Granular foundation shall be placed below the bottom of the pipe invert as replacement for unsuitable or unstable soils to provide better pipe support.

B. Granular foundation material shall be Type A5 aggregate material as specified in Section 32 05 16.

2.03 GRANULAR BEDDING

A. Granular bedding shall be placed below the pipe midpoint, prior to pipe installation to facilitate proper shaping and achieve uniform pipe support. Minimum depth as indicated on the Construction Drawings. Place approved bedding material 4-inches under the pipe, around the pipe, and to a depth of 6- inches over the pipe.

B. Granular bedding material shall meet the requirements of Section 32 05 16 and as indicated on the Construction Drawings.

2.04 GRANULAR ENCASEMENT

A. Granular encasement shall be placed below an elevation of six (6) inches above the top of the pipe, after pipe installation, for protection of the pipe.

B. Granular bedding material shall meet the requirements of Section 32 05 16 and as indicated on the Construction Drawings.

2.05 GRANULAR BACKFILL

A. Between pipe zone and subgrade elevation shall meet the requirements of Section 32 05 13 and as indicated on the Construction Drawings.

PART 3 - EXECUTION

3.01 PREPARATION

A. Identify required lines, levels, contours, and datum locations.

B. Locate, identify, maintain, and protect utilities that remain from damage.

C. Notify utility company to locate utilities.

D. Protect plant life, lawns, and other features remaining as a portion of final landscaping.

E. Protect benchmarks, existing structures, fences, sidewalks, paving, and curbs from excavating equipment and vehicular traffic.

F. Maintain and protect above and below grade utilities that are to remain.

G. Contractor shall verify which native materials are suitable for reuse as granular foundation, bedding, encasement, and backfill material at the site. Provide testing data as required and keep materials separated.

H. Notify Engineer of any unsuitable materials.

I. Dewater trench and structure excavations at no cost to Owner.

3.02 EXCAVATING

A. Excavate topsoil in accordance with Section 31 14 13.

B. Excavate trench to alignment and grade as required to meet foundation and bedding requirements as specified. Trench shall be centered on pipe alignment and no more than 100 feet of trench should be excavated in advance of pipe laying operations.

C. The trench width may vary and depend on the depth of trench, the diameter of pipe to be laid, and the nature of the material to be excavated, but in any case shall be of ample width to allow the pipe to be laid and joined properly and the backfill to be placed and compacted properly. The minimum bottom width of unsheeted trench shall be 18 inches. The maximum clear width of trench at the top of the pipe shall be not more than 32 inches greater than the outside diameter of the pipe for pipes 30 inches diameter and larger, or 18 inches greater for pipe under 30 inches in diameter. Wider trench widths at the top of the pipe shall be subject to approval by Engineer. The width of the trench at the ground surface shall be kept to a minimum to prevent unnecessary disruption of service structures.

D. If the trench width at the pipe zone is excavated to a greater width than the maximum, the Engineer may require the Contractor to provide a higher class of bedding and/or higher strength pipe that that required by the Contract Documents in order to satisfy pipe design requirements. In such case, no additional compensation shall be made for the higher class bedding or higher strength pipe.

E. Trench excavation shall be made by open cut methods. Trench sides shall be as vertical as possible and the trench shall be braced, sheeted, and drained such that the work may be performed safely in accordance with OSHA requirements.

F. Sheeting, shoring, and bracing shall be put in place and maintained as required due to soil stability or site constraints. Shoring, sheeting, and bracing shall be provided to prevent disturbance or settlement of adjacent surfaces, structures, foundations, utilities and other properties. Any damage to the work under contract or to existing adjacent structures or other improvements caused by settlement, water or earth pressures, slides, cave-ins, or other causes due to lack of appropriate sheeting, shoring, or bracing shall be repaired at the Contractor's expense at no delay.

G. Trench sheeting, shoring, and bracing shall be kept in place until pipe has been laid, tested for defects, and repaired if necessary, and the earth around the pipe is compacted. The sheeting, shoring, and bracing shall be removed in such a manner as not to remove the constructed pipe or adjacent structures or other improvements.

H. It shall be the Contractor's responsibility for proper and adequate placement of sheeting,

shoring, and bracing in accordance with all applicable regulations and standards.

I. Whenever unsuitable or unstable soil for properly supporting the pipe or structures is encountered, a further depth and/or width shall be excavated and replaced with the foundation material specified herewith or other suitable foundation material and thoroughly compacted to assure a firm foundation for the pipe.

J. Stockpile excavated material in an orderly manner, at sufficient distance from the trench to avoid overloading, to prevent slides and cave-ins.

K. Contractor shall advise Engineer immediately if any unsuitable materials are encountered during excavation. Unsuitable materials shall be reasonably separated form unsuitable materials and shall be considered surplus material at no additional cost to the Owner.

L. If Contractor encounters excess excavation materials which meet the requirements of common fill, Contractor may use those materials as fill in common execution and fill areas. Excess surplus materials shall be stockpiled.

M. Excavate to and over-depth of a minimum of 6 inches below pipe in areas of bedrock or other extensive rock formations by jack hammer, blasting, or other approved method. Trench width shall be 1.25 times the outside diameter of the pipe.

N. Remove unsuitable materials in accordance to the depth recommended by the soils testing laboratory beneath structures to obtain desired soil bearing capacity. Contractor shall notify Engineer prior to any additional excavation that is needed. Additional excavation shall be subject to approval by the Engineer and subject to additional payment as noted above.

O. Removal of materials beyond required subgrade elevations or dimensions without specific approval from soils testing laboratory and Engineer as well as backfilling, compaction, and other work at the over excavated area shall be at the Contractor's own expense.

P. Excavating and backfilling shall not be conducted in water. All excavations shall be maintained in a well drained condition at all times. Contractor shall provide and maintain temporary drainage facilities as required, and as approved by the Engineer, at no additional cost to the Owner.

Q. Do not interfere with 45 degree bearing splay of foundations. Underpin adjacent structures, as necessary, to prevent damage by excavation Work.

R. Hand trim for bell and spigot pipe joints. Remove loose matter.

S. Remove lumped subsoil, boulders, and rock up to 1/3 cubic yard, measured by volume.

T. In the event of shrinkage of excavated soils, resulting in shrinkage of backfill along trenches, Contractor shall provide, haul, place, and compact suitable soil type S1 or S2 from source at no cost to Owner.

U. Stockpile excavated material in an orderly manner, at sufficient distance from the trench to avoid overloading, to prevent slides and cave-ins. Remove excess material not being used from site.

3.03 PIPE FOUNDATION

A. Whenever unsuitable or unstable soil for properly supporting the pipe or structures is encountered, a further depth and/or width shall be excavated and replaced with the foundation material specified herewith or other suitable foundation material and thoroughly compacted to assure a firm foundation for the pipe.

B. Additional density testing may be required in unstable areas where unsuitable materials are found. Engineer shall determine stability of trench bottom.

C. Trench bottom shall be cut true and even so that the barrel of the pipe will have a bearing over the full length. Bell holes shall be excavated to ensure the pipe is resting for its entire length on the bottom of the trench and required bedding.

3.04 BACKFILLING

A. Pipe Zone

1. Should the materials available within the trench section be unsuitable or insufficient for this portion of the granular bedding, encasement and backfill materials as defined in this Specification, Contractor shall provide an approved material that meets the appropriate specifications.

2. Backfill materials shall be placed with care and deposited uniformly on both sides of pipe throughout the entire trench width in maximum 8-inch lifts. Mechanically compact material to required densities.

3. Flexible pipe shall be bedded in accordance with ASTM Specification D2321, "Recommended Practice for Underground Installation of Flexible Thermoplastic Sewer Pipe." This shall include the placement of granular bedding and encasement materials from a point four (4) inches below the bottom of the pipe to a point six (6) inches above the top of the pipe compacted to required densities.

4. Placement and compaction of bedding, encasement, and backfill materials shall be consider incidental to the installation of the pipe.

B. Above Pipe Zone

1. Use suitable excavated materials from the site prior to importing of select granular borrow material. Any additional suitable select granular borrow material required to be imported shall be provided by the Contractor at no additional cost to the Owner. Contractor shall separate out all unsuitable materials. Excess surplus materials shall be removed from the Site.

2. Provide replacement backfill as required to establish required subgrade elevation. Use select granular borrow for replacement backfill.

3. Place backfill materials in uniform layers no more the 8 inches loose depth. Mechanically compact each layer of material to required densities.

4. Do not backfill unless approved compaction equipment is operating. The method of means of placement and type of compaction equipment used is at the discretion of

the Contractor, however, all portions of the trench backfill must meet the compaction requirements. Tests to determine the compacted density of the backfill may be ordered by the Engineer if the compaction does not appear to be adequate.

5. The intent of this specification is to compact the backfill enough to prevent large settlements above the pipe, but to use as little effort as possible to avoid disturbing the pipe and bedding at the pipe zone.

C. Backfill trenches to contours and elevations with unfrozen fill materials.

D. Systematically backfill to allow maximum time for natural settlement. Do not backfill over porous, wet, frozen, or spongy subgrade surfaces.

E. Aggregate Fill: Place and compact materials in equal continuous layers not exceeding 8 inches loose depth.

F. Soil Fill: Place and compact material in equal continuous layers not exceeding 8 inches loose depth.

G. Employ a placement method that does not disturb or damage utilities in trench. Prevent floatation of pipe.

H. Maintain optimum moisture content of fill materials to attain required compaction density. Use vibratory or special compaction equipment when required.

I. Remove surplus fill materials from site.

J. Leave fill material stockpile areas completely free of excess fill materials. Contractor shall have the responsibility to load, haul, and spread all excess fill off-site.

3.05 COMPACTION REQUIREMENTS

A. Compact according to Section 01 40 00.

B. Contractor shall recompact all areas represented by failed density tests.

3.06 TOLERANCES

A. Top Surface of Backfilling:

1. Plus or minus 1 inch, upon completion of settlement in ditches, berms, and lawn areas.

2. Plus or minus 1 inch upon completion of settlement in roadways and driveways.

B. Trenches shall be kept within settlement tolerances through the warranty period.

3.07 FIELD QUALITY CONTROL

A. Section 01 40 00 - Quality Control: Field inspection and testing.

B. Compaction testing will be performed in accordance with ASTM D698, and ASTM D2922.

C. If tests indicate Work does not meet specified requirements, remove Work, replace, compact, and retest at no additional cost to Owner.

3.08 PROTECTION OF FINISHED WORK

A. Protect finished Work under provisions of Section 01 50 00.

B. Reshape and re-compact fills subjected to vehicular traffic during construction.

3.09 SCHEDULE

A. As Shown on the Construction Drawings in conformance with Geotechnical Report recommendations.

END OF SECTION 31 23 33

SECTION 31 25 00
EROSION AND SEDIMENTATION CONTROLS

PART 1 - GENERAL

1.01 SUMMARY

A. Prevention of sediment flow or deposition into: waterways; wetlands; storm and sanitary sewers due to construction activities.

B. Restoration of areas eroded due to insufficient preventative measures.

C. Related Sections include, but are not limited to:

1. Division 02 – Existing Conditions
2. Division 31 – Earthwork
3. Division 32 – Exterior Improvements
4. Division 33 – Utilities

1.02 REFERENCES

A. Montana General Permit No. MTR100000 (or its successor) - Authorization to Discharge under the National Pollutant Discharge Elimination System.

B. Montana Department of Transportation (MDT) Erosion and Sediment Control Field Manual – Latest Edition

C. Montana Department of Transportation (MDT) Standard Specifications for Road and Bridge Construction – Latest Edition

D. Montana General Permit No. MTG070000 (or its successor), Effective Date October 12, 2009 and Expiration Date January 1, 2013 – General Permit for Construction Dewatering.

E. ASTM D 4355 – Standard Test Method for Deterioration of Geotextiles by Exposure to Light, Moisture, and Heat in a Xenon Arc Type Apparatus; 2005.

F. ASTM D 4491 – Standard Test Methods for Water Permeability of Geotextiles by Permittivity; 1999a (Reapproved 2004).

G. ASTM D 4533 – Standard Test Method for Trapezoid Tearing Strength of Geotextiles; 2004.

H. ASTM D 4632 – Standard Test Method for Grab Breaking Load and Elongation of Geotextiles; 1991 (Reapproved 2003).

I. ASTM D 4751 – Standard Test Method for Determining Apparent Opening Size of a Geotextile; 2004.

J. ASTM D 4873 – Standard Guide for Identification, Storage, and Handling of Geosynthetic Rolls and Samples, 2002.

1.03 SUBMITTALS

A. Provide product specification sheets for the following erosion control materials to demonstrate that the Contractor's proposed products meet the Contract Document requirements:

1. Fabric proposed for silt fence
2. Fiber Roll
3. Gradation tests for Construction Entrance stone material

PART 2 - PRODUCTS

2.01 SILT FENCE

A. As Shown on Drawings.

2.02 FIBER ROLLS

A. Prefabricated Rolls - As shown on Drawings.

2.03 CONSTRUCTION ENTRANCE

A. Materials As Shown on Drawings.

B. 3-6 inch Stone

1. Stone shall be angular and shall be comprised of hard, durable mineral materials that have been mechanically processed.
2. Stone shall not be from limestone/dolomite deposits that have thinly bedded strata or strata of a shale nature.
3. Stone gradation shall conform to the following:

SIEVE	PERCENT PASSING (by weight)
6-inch	100
3 ½-inch	50 – 100
3-inch	10 – 75
2-inch	0 – 10
3/8 inch	0 – 1

PART 3 - EXECUTION

3.01 EXAMINATION

A. Examine site and identify existing features that contribute to erosion resistance; maintain such existing features to greatest extent possible.

3.02 PREPARATION

A. The Contractor shall develop a Storm Water Pollution Prevention Plan as required by the Montana Department of Environmental Quality that meets both the State's requirements and the minimum practices shown on the Drawings.

B. The Contractor shall complete and sign the Notice of Intent and submit to the Montana

Department of Environmental Quality.

3.03 PERFORMANCE REQUIREMENTS

A. Contractor shall comply with all requirements of the Montana Department of Environmental Quality along with all Federal, State, and Local permits and regulations for erosion and sediment control.

1. If erosion or sedimentation occurs due to non-compliance with any of these permits, Contractor shall restore eroded areas at no cost to Owner.

2. If sedimentation beyond permitted thresholds occurs in regulated waterways or wetlands, Contractor shall at no additional cost to the Owner:

a. Contact the authorities having jurisdiction;

b. Remove deposited sediments to the satisfaction of the Owner and the authorities having jurisdiction;

c. Install or correct preventive measures to the satisfaction of the authorities having jurisdiction; and

d. Pay any fines or other additional requirements of the authorities having jurisdiction; and

e. Meet the Contract schedule for project completion.

B. Contractor shall not begin clearing, grading, or other work involving disturbance of ground surface cover until applicable permits have been obtained; furnish all documentation required to obtain applicable permits.

1. Obtain and pay for permits and provide security required by authority having jurisdiction.

C. Timing of erosion and sediment control practices: As Shown on the Drawings.

D. Erosion Control: Contractor shall reduce wind, water, and vehicular erosion of soil on project site due to construction activities for this project, consistent with approved permits and following these requirements:

1. Minimum erosion control measures as shown on the Drawings with additional practices implemented as required by the Contractor's SWPPP.

2. Control movement of sediment and soil from temporary stockpiles of soil.

3. Prevent development of ruts due to equipment and vehicular traffic.

4. Provide good site housekeeping.

5. Inspect, repair, maintain, and replace erosion control practices consistent with approved permits and as shown on the Drawings.

E. Sediment Control: Contractor shall reduce sediment transport off- site due to construction activities for this project, consistent with approved permits and following these requirements:

1. Minimum sediment control measures as shown on the Drawings with additional practices implemented as required by the Contractor's SWPPP.
2. Reduce windblown soil from leaving the project site.
3. Reduce tracking of mud onto public roads outside of the site.
4. Reduce mud and sediment from flowing onto sidewalks and pavements.
5. Inspect, repair, maintain, and replace sediment control practices consistent with approved permits and as shown on the Drawings.

3.04 CLOSE-OUT

A. Contractor shall file a Notice of Termination with the State following site stabilization that meets the requirements of the General Permit.

B. Contractor shall remove and clean up all temporary erosion and sediment control practices as shown on the Drawings. Site disturbance caused by removal of these practices shall be restored consistent with the surface restoration requirements shown on the Drawings. Costs for restoration shall be at Contractor's expense.

END OF SECTION 31 25 00

SECTION 31 41 00
SHORING

PART 1 - GENERAL

1.01 SUMMARY

A. Section includes:

1. Work related to sheeting, shoring, bracing, and excavation support systems needed to accomplish construction of buildings, tanks, facilities, utilities, and piping.

B. Related sections include, but are not limited to:

1. Drawings and general provisions of Contract, including General and Supplementary Conditions, apply to work of this section.
2. Section 03 30 00 – Cast-in-Place Concrete
3. Division 1 – General Requirement
4. Division 31 – Earthwork.

1.02 SUBMITTALS

A. Shop Drawings and Product Data: Submit, in accordance with Section 01 33 00. In general, include drawings and supporting calculations for shoring for Engineer review and approval.

B. Submittals shall include:

1. Excavation support plan.
2. Movement monitoring plan.
3. Trench excavation plan.
4. Movement measurement and data and reduced results indicating movement trends.
5. Documentation that shoring plan or system has been designed by a registered Professional Engineer if required.

C. Design calculations of bracing and shoring showing member stresses and connections due to imposed loads. Calculations shall be sealed by a qualified professional engineer.

1.03 QUALITY ASSURANCE

A. An OSHA approved competent person shall review the soil classification presented in the Geotechnical Report in the field. Excavations shall comply with the requirements of OSHA 29 CFR, Part 2926, Subpart P, "Excavations and Trenches." Excavation safety is the responsibility of the Contractor. All excavations greater than 20 feet in depth shall be designed by a registered Professional Engineer.

B. Sheeting, shoring, and bracing shall conform to safety requirements of federal, state, and local agencies.

C. Sheeting, shoring, and bracing shall not affect structural integrity of existing structures, utilities, or Work, and shall allow for sufficient clearances necessary to install associated appurtenances adjacent to new Work.

D. Sheeting, shoring, and bracing shall not penetrate walls or slabs of new Work unless approved by the Engineer.

E. Provide surveys to monitor movements of critical facilities.

1.04 REGULATORY REQUIREMENTS

A. Work outlined in this Section shall conform to OSHA regulations and all applicable codes and regulations for worker safety.

PART 2 - PRODUCTS

2.01 SHEETING, SHORING, AND BRACING

A. Type, design, detail, and installation of sheeting, shoring, and bracing shall be determined by and be the sole responsibility of the contractor.

PART 3 - EXECUTION

3.01 GENERAL

A. Design, provide, and maintain shoring, sheeting, and bracing as necessary to support the sides of excavations and to prevent detrimental settlement and lateral movement of existing facilities, adjacent property, and completed Work. Shoring, sheeting, and bracing shall also be provided as necessary to protect workers and the public.

B. Sheeting, shoring, and bracing shall be installed to prevent solids from entering excavation below or through sheeting.

C. Open cut excavations are to be evaluated by a registered Engineer and protected against surface water intrusion.

3.02 EXCAVATION SUPPORT PLAN

A. Prepare an excavation support plan addressing the following topics:

1. Select and install shoring system such that no adverse impact occurs on existing structures, utilities, or facilities.

2. Details of shoring, bracing, sloping, or other provisions for worker protection from hazards of caving ground.

3. Design assumptions and calculations.

4. Methods and sequencing of installing excavation support.

5. Proposed locations of stockpiled excavated material.

6. Minimum lateral distance from the crest of slopes for vehicles and stockpiled excavated materials.
7. Anticipated difficulties and proposed resolutions.

3.03 MOVEMENT MONITORING PLAN

A. Prepare movement monitoring plan addressing following topics:
   1. Survey control.
   2. Location of monitoring points.
   3. Plots of data trends.
   4. Interval between surveys.
      a. Interval shall not be less than once per week during performance of work until the permanent structure is complete to the ground level and shall continue weekly for a period of four (4) weeks after completion of the work (or longer if movement persists).
   5. Remedial action and engineer notification plan should movement of existing structures occur during performance of the Work.

3.04 REMOVAL OF EXCAVATION SUPPORT

A. Remove excavation support in a manner that will maintain support as excavation is backfilled.

B. Do not begin to remove excavation support until support can be removed without damage to existing facilities, completed Work, or adjacent property.

C. Remove excavation support in a manner that does not leave voids in the backfill.

3.05 TRENCHES

A. Provide trench excavations exceeding four (4) feet in depth with adequate safety systems.

B. For trench excavation exceeding five (5) feet in depth, provide adequate safety systems meeting requirements of applicable state and local construction safety orders, and federal requirements.

END OF SECTION 31 41 00

DIVISION 32

EXTERIOR IMPROVEMENTS

SECTION 32 05 16
AGGREGATES FOR EXTERIOR IMPROVEMENTS

PART 1 - GENERAL

1.01 SUMMARY

A. Section includes:

1. Aggregate materials.

B. Related Sections include, but are not limited to:

1. The General Conditions, Supplementary Conditions, and General Requirements apply to work of this section.
2. Division 1 – General Requirements Specification Sections.
3. Division 31 – Earthwork Specification Sections.
4. Division 32 – Exterior Improvements Specification Sections.
5. Section 31 23 21 – Fill and Backfill.
6. Section 31 23 33 – Trenching and Backfilling.
7. Section 32 11 23 – Aggregate Base Courses.
8. Section 33 31 19 – Site Piping.
9. Section 32 13 13 – Concrete Pavement.

1.02 SUBMITTALS FOR REVIEW

A. Section 01 33 00 - Submittals: Procedures for submittals.

B. Samples: Submit, in air-tight containers, 40 pound sample of each type of aggregate to testing laboratory. Submit Laboratory Results to Engineer.

1.03 QUALITY ASSURANCE

A. Section 01 40 00 - Quality Control: Field Samples.

B. Material Source: Submit name of imported material supplier(s). Provide materials from the same source throughout the Work. Change of source requires Engineer approval.

PART 2 - PRODUCTS

2.01 AGGREGATE MATERIALS

A. Coarse Aggregate (Concrete Mix and Type A1): Well graded crushed stone or gravel conforming to the requirements of ASTM C33, Gradation 67.

B. Coarse Aggregate (Surface Course and Type A2): Gravel; angular crushed, or natural stone; free of shale, clay, friable material and debris; graded in accordance with Montana Department of Transportation specifications. For all aggregate surface areas.

C. Coarse Aggregate (Base Course and Type A3): Gravel; Angular crushed, or natural

stone; free of shale, clay, friable material and debris; graded in accordance with Montana Department of Transportation referenced specifications, Section 816, Class 5.

D. Fine Aggregate (Concrete Mix and Type A4): Natural river or bank sand; free of silt, clay, loam, friable or soluble materials, and organic matter; graded in accordance with ASTM C33.

E. Coarse Aggregate (Pipe Bedding and Type A5): All gravel for pipe encasement shall be in accordance with Montana Department of Transportation referenced specifications, Section 816, Class 3 with the Number 200 sieve requirement modified to be 3 – 15 percent passing.

F. ***Engineered Structural Fill*** *(Base course under cast-in-place on-grade slabs and wall footings): Clean mixture of crushed stone or crushed or uncrushed gravel tested in accordance with AASHTO Methods T11 and T27 meeting the following gradations:*

SIEVE SIZE	PERCENT PASSING
4-inch	100
No. 4	25 - 60
No. 40	10 - 30
No. 200	2 - 10

1. *Up to 5% "oversized" material is permitted, provided that the "oversized" material passes the screen size immediately larger than the top size specified. The material between the maximum screen opening and the No.4 sieve shall be reasonably well graded;*
2. *Suitability of the aggregate is determined b the gradation testing of material placed in the project as required in the contract documents, within the allowable limits described by the gradations above;*
3. *Assure the liquid limit for the aggregate fraction passing a No.40 sieve does not exceed 25, nor the plasticity index exceed 6 as determined by AASHTO T89 and T90.*

2.02 SOURCE QUALITY CONTROL

A. Section 01 40 00 - Quality Control: Source testing and analysis of aggregate material.

B. Coarse Aggregate Material - Testing and Analysis: Perform in accordance with ASTM C136 and ASTM D698.

C. Fine Aggregate Material - Testing and Analysis: Perform in accordance with ASTM C136 and ASTM D698.

D. If tests indicate materials do not meet specified requirements, change material or material source and retest.

E. Provide materials of each type of aggregate from the same source throughout the Work.

PART 3 - EXECUTION

3.01 BACKFILLING

A. Subgrade soils under the slab-on-grade and wall footing areas shall be compacted to a standard relative compaction of at least 95% and proof-rolled with a heavy, pneumatic tired vehicle to identify any soft spots. All areas that fail the proof-roll, shall be excavated to stable subgrade and re-compacted;

B. Dewater as necessary to ensure optimum moisture is achieved in subgrade materials;

C. Moisture condition of ***Engineered Structural Fill*** shall be maximum plus/minus 2% of optimum moisture, placed in 8" maximum loose lifts and compacted to minimum 95% in accordance with ASTM D698.

3.02 STOCKPILING

A. Stockpile materials in accordance with Section 31 14 13.

3.03 STOCKPILE CLEANUP

A. Cleanup stockpiles in accordance with Section 31 14 13.

END OF SECTION 32 05 16

SECTION 32 05 19
GEOSYNTHETICS FOR EXTERIOR IMPROVEMENTS

PART 1 - GENERAL

1.01 SUMMARY

A. Section includes:

1. Woven Geotextile Riprap Fabric.
2. Woven Geotextile Reinforcement Fabric.

B. Related Sections include, but are not limited to:

1. The General Conditions, Supplemental Conditions, and General Requirements apply to work of this section.
2. Division 1 – General Requirements Specifications Sections.
3. Division 31 – Earthwork Specifications Sections.
4. Division 32 – Exterior Improvements.

1.02 REFERENCES

A. Reference Standards include, but are not limited to:

1. Montana Department of Transportation Standard Specifications, latest edition.
2. ASTM D3786 – Mullen Burst, Latest Edition.
3. ASTM D4355 – UV-Resistance, Latest Edition.
4. ASTM D4491 – Permeability, Latest Edition.
5. ASTM D4533 – Trapezoid Tear Strength of Geotextiles
6. ASTM D4595 – Wide Width Tensile Strength, Latest Edition.
7. ASTM D4632 – Grab Tensile Strength and Elongation, Latest Edition.
8. ASTM D4751 – Apparent Opening Size (AOS), Latest Edition.
9. ASTM D4759 – Determining Specification Performance for Geosynthetics
10. ASTM D4833 – Puncture and Trapezoidal Tear, Latest Edition.
11. ASTM D4873 – Guide for Identification, Storage, and Handling of Geosynthetics, Latest Edition.

1.03 SUBMITTALS

A. Submit under provisions of Section 01 33 00.

B. Provide product data on Geotextile Fabric.

C. Submit manufacturer's installation instructions. Indicate special procedures and conditions requiring special attention.

1.04 DELIVERY, STORAGE, AND HANDLING

A. The geotextile rolls shall be furnished with suitable wrapping for protection against moisture and extended ultraviolet exposure prior to placement.

B. Rolls shall be stored in a manner which protects them from the elements. At no time shall the geotextile be exposed to ultraviolet light for a period exceeding fourteen days.

C. The geotextile rolls shall be labeled as per ASTM D 4873, "Guide for Identification, Storage, and Handling of Geosynthetics".

PART 2 - PRODUCTS

2.01 MATERIALS

A. Non-Woven Geotextile

1. Non-woven geotextile fabric shall have the following minimum performance properties:

Property	Test Method	Value
% U.S. Manufactured		100%
Weight per unit measure		8 oz/yd^2
Grab Tensile Strength	ASTM D-4632	205 lb.
Grab Elongation	ASTM D-4632	50%
CBR Puncture	ASTM D-6241	525 lb.
Trapezoidal Tear	ASTM D4355	80 lb.
UV Resistance at 500 hr.	ASTM D-4355	70%
Apparent Opening Size	ASTM D-4751	80 US Std. Sieve
Permittivity	ASTM D-4491	1.5 sec^{-1}
Water Flow Rate	ASTM D-4491	110 gpm/ft^2

2. Non-woven geotextile fabric shall be Geotex 801 by Propex Geosolutions – 4019 Industry Drive, Chattanooga, TN 37416.

B. Geogrid Fabric

1. Geogrid fabric (if required) shall have the following minimum performance properties:

Property	Test Method	Value
Aperture Dimensions		1.3"
Rib Thickness		0.05"
Tensile Strength @ 2% Strain	ASTM D-6637	650 lb/ft

Tensile Strength @ 5% Strain	ASTM D-6637	580 x 920 lb/ft
Ultimate Tensile Strength	ASTM D-6637	1,970 lb/ft
Junction Efficiency	ASTM D-7737	93%
Flexural Rigidity	ASTM D-7748	750,000 mg·cm
Aperture Stability	ASTM D-7864	0.65 m·N/deg
Resistance to Installation Damage	ASTM D-5818 ASTM D-6637	95% SC; 93% SW; 90% GP
Resistance to LT Degradation	EPA 9090	100%
UV Resistance at 500 hr.	ASTM D-4355	100%

2. The Geogrid fabric shall be Tensar BX1200 Biaxial Geogrid or approved equal.

PART 3 - EXECUTION

3.01 EXAMINATION

A. Verify subgrade has been inspected, gradients and elevations are correct; surface is dry, and ready to receive Work.

3.02 PREPARATION OF SUBGRADE MATERIALS

A. Correct irregularities in subgrade gradient and elevation by scarifying a minimum of 6-inches, reshaping, and re-compacting.

B. Do not place on soft, muddy, or frozen surfaces.

3.03 PLACEMENT

A. Geotextile fabric shall be placed in accordance with Manufacturer's recommendations.

B. The geotextile shall be laid out smooth without wrinkles or folds on the prepared subgrade in the direction of the construction traffic.

C. Adjacent geotextile rolls shall be overlapped a minimum of 2.5 feet; ends of rolls shall be overlapped 3 feet.

D. On curves, the fabric may be folded or cut to conform to the curves. The fold or overlap shall be in the direction of construction and shall be held in place by staples, pins or aggregate piles.

E. Damaged areas shall be repaired by overlaying the area with sufficient material to overlap on all edges by at least 2.5 feet.

F. The aggregate base material shall be placed by end dumping onto the geotextile from the edge or over previously placed base aggregate. Construction equipment shall not be allowed directly on the geotextile fabric.

G. A minimum of 12 inches of aggregate must be placed on the geotextile prior to the movement of construction equipment above the fabric.

H. Turning movements must be carefully monitored to avoid rutting of the aggregate. Any ruts occurring during construction shall be filled with additional gravel aggregate and compacted to the specified density.

I. If placement of the backfill causes damage to the geotextile, the damaged area shall be repaired as described in Section 3.03.E.

J. Install in the locations as indicated on drawings.

3.04 FIELD QUALITY CONTROL

A. Section 01 40 00 – Quality Assurance: Field inspection.

3.05 SCHEDULE OF LOCATIONS

A. Use non-woven geotextile Fabric where called for in the project drawings, generally in the following locations:

1. Beneath cast-in-place concrete footing base course gravel;

END OF SECTION 32 05 19

SECTION 32 97 00
RESTORATION OF DISTURBED AREAS

PART 1 - GENERAL

1.01 SUMMARY

A. Section includes:

1. Restoration of all areas disturbed during construction.
2. Restoration of all items not specifically identified for restoration, but damaged through construction.

B. Related Sections include:

1. The General Conditions, Supplementary Conditions, and General Requirements apply to work of this section.
2. Division 1 – General Requirements Specification Sections.
3. Division 31 – Earthwork Specification Sections.
4. Division 32 – Exterior Improvements.

1.02 REFERENCES

A. Reference Standards include:

1. Montana State Highway Department Standard Specifications for Road and Bridge Construction, latest edition.

PART 2 - PRODUCTS

2.01 MATERIALS

A. Material Sections include:

1. Topsoil in the form of compost or compost mix can be procured from the OWNER
2. Aggregate Materials: Per Section 32 05 16.
3. Seed: Per Montana Public Works Standard Specifications Section 02910 with the addition of the following dryland seed mixture:

Seed Species or Variety	Seed Mix %	Application Rate
Western Wheatgrass	20%	21 lbs. Per acre
Pryor Slender Wheatgrass	20%	
Crituna Thickspike Wheatgrass	30%	
Sudar Stream Bank Wheatgrass	20%	
Canada Bluegrass	10%	

PART 3 - EXECUTION

3.01 EXECUTION

A. Observe all surface features requiring protection, removal and replacement, and/or restoration prior to construction.

B. The Contractor shall be responsible for the preservation of all public and private property and shall protect carefully from disturbance or damage all land monuments and property marks until the Engineer has witnessed or otherwise referenced their location and shall not move them until directed.

C. The Contractor shall be responsible for all damage or injury to property of any character during the prosecution of the Work, resulting from any act, omission, neglect, or misconduct in his manner or method of executing the Work, or at any time due to defective Work or materials, and said responsibility will not be released until the Project shall have been completed and accepted.

D. When any direct or indirect damage or injury is done to public or private property by or on account of any act, omission, neglect, or misconduct in the execution of the Work, or in consequence of the non-execution thereof by the Contractor, he shall restore, at his own expense, such property to the condition similar or equal to that existing before such damage or injury was done by repairing, rebuilding, or otherwise restoring as may be directed or he shall make good such damage or injury in an acceptable manner.

3.02 RESTORATION

A. Restore all areas disturbed by construction to a condition equal to or better than existed prior to construction.

B. Replace, restore, repair, or otherwise make good any damage done to any tree, bush, or shrub that is not specifically designated for removal.

C. Restore items such as culverts, road signs, power poles, sodding, fences, driveways, mailboxes, and like, whether or not specifically identified on the Drawings, to a condition equal to or better than existed before construction.

D. Replace or repair all concrete or asphalt roads or driveways, removed or damaged during construction with equal or better materials. Replace or repair to match existing conditions.

E. Stabilize subgrade sufficiently to prevent mixing of granular material with subgrade prior to application of base material.

F. Place topsoil evenly and to the specified thickness, roll and seed areas disturbed by construction in grassed areas per this Section.

G. All damage to streets, driveways, berms, etc. due to the Contractor's construction techniques and equipment shall be repaired at the Contractor's expense prior to final payment.

H. Remove all excess dirt, concrete, and other debris from work area immediately upon

completion of Work and deposit on-site in a disposal area designated by Owner. Contractor shall be required to clean site to the condition prior to the start of construction before final payment will be made.

I. All restoration shall be completed prior to opening any section of Work.

END OF SECTION 32 97 00

DIVISION 33

UTILITIES

SECTION 33 05 26
UTILITY IDENTIFICATION

PART 1 - GENERAL

1.01 SUMMARY

A. Section includes:

1. Marking tape.

B. Related Sections include, but are not limited to:

1. Section 01 33 00 – Submittals.
2. Section 31 23 33 – Trenching and Backfilling.
3. Section 33 11 16 – Irrigation Water Supply Well
4. Section 33 31 19 – Site Water Utility Distribution Piping.

1.02 SUBMITTALS

A. Submit under provisions of Section 01 33 00.

B. Shop Drawings: Submit manufacturer's data on materials furnished indicating compliance with the specifications.

PART 2 - PRODUCTS

2.01 MATERIALS

A. Marking Tape:

1. "Terra Tape" as manufactured by REEF Industries, Inc., or Omega Marking Company.
2. Size: 3”.
3. Marking Tape Schedule and Warning Notice:

Pipeline	**Warning Notice**	**Color**
Sanitary Sewer	Caution Buried Sewer Line Below	Green
SS		
Force Main	Caution Buried Force Main Below	Green
FA (Foul Air) / Storm / Condensate		
Potable Water Main	Caution Water Line Buried Below	Blue
PW		
Non Potable Water	Caution Non Potable Water Line Buried Below	Purple
NPW		
Electric	Caution Electric Line Buried Below	Red
Gas	Caution Gas Line Buried Below	Yellow
OTHERS	Caution ---------- Buried Below	TBD

PART 3 - EXECUTION

3.01 INSTALLATION

A. Install the marking tape 24" below finished grade directly above and parallel with pipelines. Marking tape shall be installed for all site piping outlined in Sections 33 31 13, 33 31 19 and the Piping Schedule and shall be labeled in accordance with this section.

B. At each manhole, bring the marking tape up to the manhole to a point approximately 24 inches below finished grade. Drill through the manhole and pull the detector tape through the manhole and label the loose end with a plastic marker. Grout hole with non-shrink grout or water stop material.

END OF SECTION 33 05 26

SECTION 33 11 16
IRRIGATION WATER SUPPLY WELL

PART 1 - GENERAL

1.01 WORK REQUIREMENTS

A. This section covers the work, materials, equipment and all incidentals necessary for furnishing materials for, drilling, logging, casing, screening/perforating, testing alignment/plumbness, developing and testing a new irrigation water supply well, complete.

B. The well will be drilled to an approximate depth of 40' in order to obtain water from the same water-producing formation as other wells on the City's parcels that include the compost and wastewater treatment plant. The CONTRACTOR must follow Montana Department of Environmental Quality (DEQ) and Montana Department of Natural Resources standards and regulations for construction of water supply wells.

C. Upon completion of the well and before conducting the yield and drawdown tests, the contractor shall surge and develop the well to remove all fines, drill cuttings, mud, drilling fluids, and additives in accordance with ARM 36.21.653. The total development time is estimated to be 10 hours or less. CONTRACTOR shall consult with OWNER'S REPRESENTATIVE regarding method(s) of development and termination of procedures.

D. The estimated length of the step-drawdown test is 4 hours. The estimated length of the constant discharge pump test is 24 hours. However, OWNER'S REPRESENTATIVE shall determine the length of the test(s) and therefore may increase or decrease the total pumping time.

PART 2 - PRODUCTS

2.01 GENERAL

A. All equipment shall be in good working condition prior to use in the work. Operate and maintain equipment in conformance with manufacturer's recommendations.

B. Provide all materials and equipment necessary for joining and installing 8-inch diameter steel or PVC well casing.

2.02 PERMANENT WELL CASING

A. Provide a permanent well casing of the type, thickness, diameter, and weight as specified. All casing shall be of new, first quality material and free of defects in workmanship and handling. Casing and installation shall meet the requirements of ARM Title 36, Chapter 21.

B. All well casing shall be made of:

1. steel, which conforms to ASTM A-120 or better. The 8-inch-diameter production casing shall have a wall thickness of 0.250 inches;

2. Schedule 40 PVC which conforms to ASTM D1785 and NSF 14;

C. Surface seal shall be a minimum of 25 feet below ground surface. Where surface casing is used to obtain the seal, the casing shall be a minimum of 25 feet long and be withdrawn as seal material is placed.

D. It is anticipated that this well will be artesian with flowing water at the surface.

1. If clay or hardpan is encountered above the water bearing formation, the well must be constructed in accordance with ARM 36.21.657.

2. If a sand or gravel aquifer is overlaid only by permeable soils, the well must be constructed in accordance with ARM 36.21.656.

2.03 FITTINGS

A. Provide all fittings, drive shoes, and centering guides as shown on the attached well construction drawing or as necessary to complete the well.

2.04 STRAIGHTNESS AND PLUMBNESS

A. Provide all materials and equipment necessary to perform the straightness and plumbness test(s) as specified. Test equipment shall be in conformance with AWWA A100, except as modified by these Specifications.

2.05 DRILLING EQUIPMENT

A. Provide a drilling rig capable of completing the well as shown on the Project Drawings. The borehole will be drilled by air-rotary method. A Drill Tech T25K drill rig equipped with at least 850 cfm air compressor at 350 psi and a large drive-through casing hammer, or equivalent size drill rig is required for the air-rotary drilling.

B. Provide all support vehicles, tools, bits, drill string assembly, bottom-hole assembly and all other necessary equipment for drilling.

2.06 DRILLING FLUID

A. No extraneous drilling fluids or additives will be used with the exception of potable (or non-potable) water and additives as required. Review fluids and additives with OWNER'S REPRESENTATIVE prior to drilling.

2.07 TEST AND SAMPLING EQUIPMENT

A. The CONTRACTOR will be responsible for taking formation samples. The driller shall provide a means for collecting formation samples and shall advise the OWNER in determining the most practical drilling depth.

B. The CONTRACTOR will be responsible for collecting and analyzing water samples during well construction and testing. It is anticipated that samples will only be collected near the end of well pump testing. The CONTRACTOR shall advise the OWNER during collecting water samples or well development if unusual water conditions occur; e.g. unusual odors or appearance.

2.08 SCREEN

A. If warranted by a thorough analysis of the formation materials by the CONTRACTOR and ENGINEER, a Stainless Steel Well Screen of appropriate size shall be provided and installed. The screen shall be fabricated of ASTM A666, Type 304 stainless steel by welding, with continuous slot, V-shaped openings that widen inwardly, constructed similarly to a Johnson well screen or equal. Screen slot openings shall be completely clean and free of burrs, frayed edges and cuttings. When applicable the screen shall have a K-packer for insertion into the casing. The screen shall be sufficient to provide adequate specific capacity and low entrance velocity, not to exceed 0.1 feet per second. Seal the bottom of the deepest screen with a threaded or welded plate, consisting of the same material and thickness as the screen welded plug, screen body or casing.

2.09 DEVELOPMENT EQUIPMENT

A. Furnish the necessary equipment as required to complete the development process.

B. Development of the well using a combination of techniques including surging, bailing, over-pumping, and air-lifting using the drill pipe and rig air compressor may be adequate to fully develop the well.

C. If the well screen/perforations become clogged with sediment or cuttings that are difficult to remove using the conventional methods named above, hydraulic jetting with air or water also may be required.

D. Furnish an electric submersible pump, discharge equipment, and piping for development of the well by over pumping. Pump and appurtenances are specified in the PUMPING TEST section of this specification below.

2.010 TEST PUMPING

A. Furnish and install a test pump and/or driver capable of pumping up to 200 gpm at an intake setting of about 50 feet bgs for a prolonged length of time. The pipe shall be fitted with a check valve immediately above the pump.

B. Use a butterfly valve, or equal, on the discharge pipe for adjustment of the flow rate from 50 to 200 gpm.

C. The pumping unit prime mover, controls, and appurtenances shall be capable of being operated without interruption for a period of 24 hours.

D. OWNER has indicated that electrical service will not be installed at the well site prior to the start of the pump test. CONTRACTOR will be responsible for providing a portable generator or other electrical service. CONTRACTOR is also responsible for fueling Generator during the 24-hour test.

E. Flow Measurement Device - Provide machined orifice plate(s) or flowmeter(s) or other discharge measuring equipment capable of measuring the pump discharge within ±5 percent of true flow for flow rates between 50 to 200 gpm.

F. Discharge Piping - Furnish, install, maintain, and operate discharge piping for the pump unit of sufficient size to transport pumped water to a suitable disposal area.

G. Water Level Measurement - CONTRACTOR will provide and install a probe access tube at least ¾-inch in diameter for periodic measurement water levels in the completed well. The tube will extend to a depth agreed to by OWNER'S REPRESENTATIVE and will be based on final depth and static water level.

PART 3 - EXECUTION

3.01 DRILLING

A. Notify the OWNER'S REPRESENTATIVE five (5) business days prior to mobilization of drilling equipment to the site.

B. Provide at all times a thoroughly experienced, competent, and Montana licensed driller during all operations at the drill site.

C. Drill the well of the dimensions as specified herein and at the approximate location shown on the Project Drawings. The exact location will be determined by the OWNER'S REPRESENTATIVE in the field.

D. The borehole shall be drilled so as to permit the installation of the casing straight and plumb to the tolerances specified in this Section. The OWNER'S REPRESENTATIVE may accept installed casing if it does not comply with these tolerances as long as it does not interfere with installation and removal of pumping equipment.

E. Use only NSF-approved drilling fluids and additives specifically recommended by the manufacturer for use in water well drilling. Avoid contamination of the samples or the aquifer.

F. Casing lengths shall be joined watertight by a method appropriate to the material used, as selected by the CONTRACTOR, so that the resulting joint shall have the same structural integrity as the casing itself. Joints shall be in accordance to ATM 36.21.642.

G. Casing which fails, collapses, or separates during construction shall be removed from the hole and repaired or replaced at CONTRACTOR's sole expense.

H. Casing to be screened over interval(s) specified by OWNER'S REPRESENTATIVE. Well casing shall be closed with appropriate packer and screened in water-producing zone(s) as selected by OWNER'S REPRESENTATIVE. The screen shall be designed such that an entrance velocity of less than 0.1 feet per second shall be achieved at the maximum test production of the well. Screen shall be of stainless steel construction, continuous wedge wire wound, welded on a series of perpendicular support rods.

I. Straightness and Plumbness Test

1. The well shall be constructed and all casings and screens set round, straight, and plumb. To demonstrate compliance with the requirements, the CONTRACTOR shall perform the test described herein in conformance with the most recent AWWA A100 standard, or equal. The test for straightness and plumbness shall be made following construction of the well and before test pump equipment is installed.

2. Generally, straightness and plumbness shall be tested by lowering into the well to a depth of the bottom of the well a mandral not more than 1/2 inch smaller than the inside diameter of the well casing. The length of the test mandral is 1.5 times the diameter of the well casing.

3. The plumb line may be suspended from the drilling rig or from a tripod with winch. An adjustable guide block shall be provided so that the test pipe or dummy will hang in the exact center of the top of the well casing. As the pipe or bailer dummy is lowered into the hole, the deflection of the plumb line from the exact center of the casing will be measured every 10 feet.

4. Should the test pipe or bailer fail to move freely throughout the length of the casing or hole to a depth of the bottom of the well or should the well vary from plumb in excess of that allowed by the AWWA standard, the plumbness and straightness of the well shall be corrected by the CONTRACTOR at his sole expense. Should the CONTRACTOR fail to correct such faulty straightness or plumbness, OWNER'S REPRESENTATIVE may refuse to accept the well. OWNER'S REPRESENTATIVE may waive the requirements of this paragraph for plumbness if, in his judgment: (a) the CONTRACTOR has exercised all possible care in constructing the well and the defect is due to circumstances beyond his control; (b) the utility of the completed well will not be materially affected; (e) the cost of necessary remedial measures will be excessive.

J. Compliance with Governmental Regulations

1. Construct the well in strict conformance with all laws, rules, regulations, and standards related to the construction of wells in accordance with the Montana Department of Environmental Quality (DEQ), the Montana Department of

Natural Resources and Conservation (DNRC) and all applicable sections of Administrative Rules of Montana Title 36, Chapter 21.

K. Formation Samples - Formation samples will be collected by the CONTRACTOR at 5-foot intervals and at each change in formation or material type The method must yield samples that are representative of the actual depth to which drilling has progressed.

L. Protection of Water Quality

1. Take all necessary precautions to prevent contaminated water, diesel fuel, gasoline, or other deleterious substances from entering the well, either through the opening or by seepage through the ground surface. Do not allow cuttings or drilling fluids to contaminate ground or surface water. Utilize a temporary watertight cap on well whenever drilling is not in progress. Maintain precautions during and after construction of the well until accepted by the OWNER.

2. Grading: Slope the ground immediately surrounding the top of the well casing or pitless wellheads away from the well in all directions, as shown on the drawings.

3. Correcting Contamination: If the well becomes contaminated, or water with undesirable physical or chemical characteristics enters the well due to the neglect of the CONTRACTOR, corrective work including the supplying of casing, seals, sterilizing agents, or other materials necessary to prevent contamination of the aquifers shall be performed at the CONTRACTOR's expense.

M. Drilling and Well Logs

1. Furnish OWNER a daily drilling log. The log shall accurately describe the geologic materials and depths encountered; the presence or absence of water; depths of lost circulation zones and methods of regaining circulation; drilling rates; time, depth, and description of any unusual occurrences or problems during drilling; and diameters and lengths of casing installed. Keep the log up-to-date with the progress of drilling. Keep a copy at the drill site for review by OWNER. Use reproductions of the Daily Drilling Report located at the end of this section, or equal.

2. Prepare and submit a final well log which shall include geologic log; borehole diameters; depth of the bottom of the casing and/or the bottom of the borehole; casing diameters and wall thicknesses; cemented zones; perforated or screened interval(s); amount of sand removed during development; and other information from the daily logs pertinent to the well construction. File all records and reports with the proper agencies required by federal, state, and local codes or regulations. Copies of all records and reports (including results) shall be submitted to the OWNER.

N. Disposal of Cuttings and Water

1. Drilling water may be disposed of at the drill site in a temporary infiltration pit. Development water may be discharged in a downgradient direction but shall not run off to adjacent property. Affected property must be restored to preexisting condition.

2. Water contaminated from the drilling process shall not be discharged into water bodies subject to the Montana Water Quality Act, or the federal Clean Water Act without proper discharge permitting.

3. CONTRACTOR shall consult with OWNER and ENGINEER prior to discharge of water from pump testing. OWNER'S REPRESENTATIVE will direct CONTRACTOR regarding disposal of pumped water.

4. Remove from the drill site all cuttings, water, or other material removed by drilling operations, which are not required to complete the work.

O. Daily Drilling Report

Date:	Owner:
	Well No.:
Casing/Hole Diameter	-inch
Depth of Well:	Depth to Water (Below ground)
Start of Shift _____ feet	Start of Shift _____ feet
End of Shift _____ feet	End of Shift _____ feet

Description	Depth	
	From	To
Remarks: (Character of drilling, casing added, miscellaneous work items, etc.)		

Driller:_____

Helper:_____

3.02 DEVELOPMENT

A. Development equipment and methods of execution shall be the CONTRACTOR's responsibility depending on the hole conditions and CONTRACTOR's experience, but shall include at a minimum, surging, bailing, and over-pumping the well.

B. Initially develop the well by means of backwashing the screened/perforated zone with a surge block, followed by bailing, then pumping. During development, the well shall be intermittently bailed or otherwise cleaned to the bottom to remove the fine sediment drawn into the well.

C. Airlift pumping may be used at the CONTRACTOR'S discretion to assist in the development process. Should the well screen plug, it will be the CONTRACTOR'S responsibility to clean and return the screen to specified performance standards.

D. Operate the pumping development equipment continuously at such rates of discharge and for such periods of time as determined by OWNER'S REPRESENTATIVE. The well shall be pumped until the water is free from sand, silt, and turbidity and/or until no further increase in specific capacity can be observed. OWNER'S REPRESENTATIVE shall determine when development by pumping is complete.

E. Development by Surging and Bailing

1. After the well screen is installed, initially develop the well by means of a surge block and bailer. If fines, which have been drawn into the well, fill the well screen sump or tailpipe, the well shall be bailed or otherwise cleaned to the bottom before resuming surging.

2. After initial development by surging, the well shall be sounded and cleaned to the bottom by bailing or other equal method

F. Development by Hydraulic Jetting

1. If it is apparent, after the well screen has been surged and bailed, that the screen is clogged with drilling fluid additives, then it will become necessary to clean the well screen by hydraulic jetting, as determined by OWNER'S REPRESENTATIVE.

2. Further develop the well by high velocity jetting while simultaneously pumping the well at a higher rate than the jet discharge.

3. The equipment shall be assembled and operated so that jet streams of water are directed into the well screen at right angles to the axis of the screen. During jetting the tool shall be slowly rotated through 120 degrees and back and moved up and down within the screen so that the jet streams are directed against all parts of the screen.

4. If the well screen sump or tail pipe fills with fines prior to completion of jet development, the jetting equipment shall be removed and the well cleaned to the bottom before resuming jetting.

G. Installation of Pumping Equipment

1. After initial development by surging, bailing, and hydraulic jetting (if necessary), the high capacity pump, flow measuring device(s), discharge piping, access pipe/air-line, and other necessary appurtenances shall be installed for pumping development and testing as specified in Section 02681 PUMPING TEST. Monitoring and data recording equipment will be provided by the OWNER'S RESPRESENTATIVE.

2. After pumping development, the well shall be sounded. If fine sediment has filled the well sump to the bottom of the well screen, the pumping equipment shall be removed and the well shall be cleaned to its original depth by bailing or other equal method. If sediment deposition in the well sump is minimal, do not remove the pump and appurtenant equipment until the work is complete as specified in Section the PUMPING TEST section of this specification outlined below.

H. Pumping Development

1. Operate the pumping development equipment continuously at such rates of discharge and for such periods of time as determined by OWNER'S REPRESENTATIVE. The well shall be pumped until the water is free from sand, silt, and turbidity and/or until no further increase in specific capacity can be observed. OWNER'S REPRESENTATIVE shall determine when development by high-capacity pumping is complete.

2. The static water level in the well shall be allowed to recover to original static water level or for a time equal to the pumping development time if recovery is slow before start of the well pumping test.

I. Disposal of Development Water

1. Disposal of development water shall be the responsibility of the CONTRACTOR after consultation with the OWNER'S REPRESENTATIVE. Clean water may be disposed of at the drill site through infiltration pits or discharged directly on to the ground surface provided the discharge water does not constitute a health hazard or create a dangerous working environment. Water produced during development shall be disposed in an environmentally sound manner in accordance with applicable federal, state, and local regulations. Water leaving the site must be directed so as not to cause flooding or erosion.

3.03 WELL PRODUCTION PUMPING TEST

A. The pump, control valve, flow measuring device(s), discharge piping, access tubes, and other necessary appurtenances shall be installed for the well pumping test(s).

B. Step-Drawdown Test

1. Run a preliminary capacity step-drawdown test prior to the constant discharge pump test. Operate the test equipment continuously at such rates of discharge and for such period of time as determined by OWNER'S REPRESENTATIVE. Duration of the step-drawdown test shall be approximately 4 hours, for the purpose of checking operation of pumping test equipment, to estimate the production capacity of the well, and to establish an appropriate pumping rate for the constant discharge pump test.

2. The water level in the well shall be allowed to recover for a period of 12 hours or until static conditions are reached or as determined by OWNER'S REPRESENTATIVE before the start of the constant discharge pump test.

C. Constant Discharge Pump Test

1. Operate the constant discharge pump test equipment continuously at such rates of discharge and for such period of time prescribed by OWNER'S REPRESENTATIVE. The CONTRACTOR shall provide an operator for the duration of the test, or as required by OWNER'S REPRESENTATIVE, to operate the pump and to regulate the discharge by a gate valve during the test-pumping period.

2. At completion of the constant discharge pump test, the pump bowls and column shall not be removed from the well for a 24-hour period or less, as determined by OWNER'S REPRESENTATIVE, to allow accurate water level recovery measurements to be taken.

D. Measurements

1. Records: OWNER'S REPRESENTATIVE shall make accurate written records of pumping rates, time intervals, and other pertinent details of the pumping test(s).

2. Pumping Rates: OWNER'S REPRESENTATIVE shall record the pumping rate every 5 minutes for the first 2 hours of the test, and every 1/2-hour thereafter, for the duration of the test(s).

3. Background Water Levels: OWNER'S REPRESENTATIVE shall measure and record the static water levels in the pumped well and OWNER's nearby production well at 12-hour intervals for a period of 24 hours immediately preceding the start of the test. The existing well, to be replaced, may be used for monitoring

4. Drawdown Measurements: OWNER'S REPRESENTATIVE shall measure and record the drawdown in the pumped well and nearby test well in accordance with the following schedule:
    a. Every 10 seconds for the first 2 minutes.
    b. Every 30 seconds for the next 8 minutes.
    c. Every 1 minute for the next 10 minutes.
    d. Every 2 minutes for the next 10 minutes.
    e. Every 10 minutes for the next 2 hours.
    f. Every 30 minutes for the next 21 hours.

5. Recovery Measurements: OWNER'S REPRESENTATIVE shall measure and record the recovery of the water levels in the pumped well and nearby test well for a period up to 12 hours, as determined by OWNER'S REPRESENTATIVE, following the same measurement schedule used for drawdown measurements.

E. Provide operators at the site to monitor pumping equipment.

F. Further Development

1. If considerable quantities of fines are pumped out of the well during the test, the CONTRACTOR shall discontinue the test and resume well development. OWNER'S REPRESENTATIVE shall be the sole judge as to whether such additional development is necessary.

2. After completion of the test, the CONTRACTOR shall, at the direction of OWNER'S REPRESENTATIVE, remove any sand or silt accumulated in the well as a result of the pumping test.

G. Disposal of pumping test water shall be the responsibility of the CONTRACTOR. CONTRACTOR shall consult with OWNER's REPRESENTATIVE prior to disposal of water. Water produced during the pump test shall be disposed in an environmentally sound manner in accordance with applicable federal, state, and local regulations. Water leaving the site must be directed so as not to cause flooding or erosion.

END OF SECTION 33 11 16

SECTION 33 11 36
IRRIGATION SYSTEM – WELL, PUMP, PIPING & CONTROLS

PART 1 - GENERAL

1.01 DESCRIPTION

This section covers furnishing and installing: drill/case new supply well, screen; submersible close coupled pump, pitless adapter, drop pipe, fittings, power conductor, centralizers, seal and cap; delivery piping/fittings; pressure tank; pump control drive; irrigation system controller, control valves and discharge appurtenances.

1.02 SUBMITTALS

The CONTRACTOR shall provide the following submittals:

A. Detailed pump, motor, and related accessory materials, including performance curves and efficiency ratings for the pump and motor.

B. Shop drawings showing pump location, valves, pitless, seal, electrical and control panel equipment and wiring diagrams.

C. Irrigation controller and control valves;

D. Operation and maintenance manuals.

E. Delivery and installation dates.

PART 2 - MATERIALS

2.01 GENERAL

A. The pump installation shall be complete and shall include pump, check valves, piping, electrical wiring, a new pump control panel, a new pitless adapter for the new well, and miscellaneous items including all required connections to above-ground wiring and piping.

2.02 SUBMERSIBLE PUMP

A. The CONTRACTOR shall furnish and install a new submersible well pump and motor, new drop pipe, power cable, air test line and torque arrestor (if necessary) in the new well. The pump shall have a 2-inch brass check valve installed above the pump (or a built-in check valve), and a 2-inch brass check valve installed in the drop pipe at every 40 feet-interval above the pump. The pump and motor shall each be designed to pump 33 gpm at 130 feet total dynamic head assuming an approximate pumping water level of 20 feet below the ground surface. The pump motor should be at least 2 hp, 3Ø, 460V, 60 Hz in a 4" diameter chassis. Acceptable pump/motor assemblies are: Goulds Model 25GS-20; Red Lion RS22 or approved equal. The pump and motor combinations shall be selected to provide the optimum wire-to-water efficiency, and shall be approved by the ENGINEER.

2.03 PUMP VARIABLE SPEED CONTROLLER

A. A new pump controller/drive and switchgear shall be provided to control the operation of the new irrigation pump. The controller shall be within the Conex Control Building (permanently mounted to the interior wall) and shall include the following features:

1. NEMA 3R enclosure;
2. 3-wire, 3Ø, 460V capable;
3. backlit LCD Information Center showing: current time; system status; fault information; ground detection; pressure; motor frequency; running amps
4. built-in EMI/RFI filter for noise & interference protection;
5. SD card slot to allow for updating software from manufacturer;
6. spring terminals for easy/secure wiring connections;
7. removable terminal blocks for customizing motor and power supply;
8. temperature-sensitive fan for unit cooling;
9. Electronic pressure transducer with piezo-resistive technology to minimize the effects of water hammer.

B. The Controller shall be a Pentek Intellidrive Model PID20 by Pentair or pre-approved equal. Any "or equal" proposal shall have the same critical features and functionality as the controller specified, and shall work seamlessly with the irrigation system layout as proposed in these project documents.

See also Division 26 requirements.

2.04 PITLESS ADAPTER

A. A pitless adapter shall be installed on the upper well casing to conduct water from the drop pipe, through the well casing to the supply pipe feeding the irrigation control system. The pitless adapter shall:

1. be installed at a depth of 6.5' below finished ground surface;
2. be constructed of no-lead bronze;
3. be equipped with an easily replaceable O-ring seal, molded positive pressure outside gasket, and O-ring gasket on the inside face of the casing;
4. have an extra-wide, no-lead brass nut;
5. have both the male and female fittings tapered for seamless connection and easy removal.

B. The pitless shall be a Merrill MBNL300 - 2" or equal

2.05 PIPING AND FITTINGS

A. Drop (discharge) piping inside the well casing shall be new 2-inch diameter Schedule 80 PVC pipe and Schedule 120 drop couplings corresponding to the discharge diameter of the submersible pump and meeting the requirements outlined in Seciton 40 27 00. Connections in the drop pipe shall be made with threaded fittings.

B. Provide check valves for the pump and discharge piping in accordance with Section 40 27 00.

C. Discharge piping from the new well to the new Conex Control Building shall be 2-inch diameter HDPE DR17 pipe, in conformance with AWWA C151: Ductile-Iron Pipe, Centrifugally Cast, for Water or Other Liquids.

2.06 PRESSURE TANK

A. A pressure tank shall be installed as an integral part of the irrigation system in order to assist in providing adequate pressure and optimizing well pump run cycles. The pressure tank shall:

1. be installed in the Conex Control Building;
2. have a minimum operating tank volume of 20 gallons;
3. have an external shell and welded floor stand constructed of high-strength steel, coated with Tuf-Cote™;
4. be equipped with a stainless steel system connection fitting and projection-welded air valve;
5. have an anti-microbial liner and heavy-duty butyl diaphragm;
6. have a factory pre-charge pressure of 38 psig;
7. be equipped with a Turbulator® water circulator;
8. have a maximum working pressure of at least 150 psig and maximum operating temperature of 200°F:
9. have a manufacturer's warranty of at least 7 years.

B. The pressure tank shall be an Amtrol Well-X-Trol Model WX-202 or equal

2.07 FROST-FREE YARD HYDRANT

A. The irrigation system shall include a frost-free hydrant with the following characteristics:

1. 1" diameter galvanized steel pipe casing configured for 6' burial;
2. Galvanized operating rod with rod guides;
3. 1" NTP female inlet connection;
4. Working pressure of 125 psi minimum;
5. Lever operating handle with graphite packing;
6. Drain hole allows entire casing even if a hose is attached to spigot;
7. Minimum 5-year manufacturer's warranty;

B. The frost-free hydrant shall be a Model R34 as manufactured by Woodford.

2.08 IRRIGATION CONTROLLER AND CONTROL VALVES

A. Irrigation Controller:

1. The irrigation system shall include a programmable irrigation controller capable of regulating flow to the two Biofilters – one zone per biofilter. The controller shall have the following features/characteristics:
2. Weatherproof cabinet with internal transformer for plug & go installation;
3. 120V circuit, wall mountable;
4. Capable of a minimum 3 programs – programmable by operator;
5. Minimum 4"x3" backlit LCD screen and manual dial for easy programming;

6. Battery backup;
7. Minimum 4 zones (to allow for future expansion);
8. Precipitation sensing and rain delay capable;
9. Minimum 6-year manufacturer's warranty
10. The irrigation controller shall be an Orbit 4-Station Easy-Set Logic Controller

B. Control Valves:

1. The irrigation system shall include two 2" electric solenoid-actuated in-line control valves to regulate flow to the two Biofilter sprinkler zones;
2. Solenoid shall be 24 VAC 350mA inrush, 190 mA holding at 60Hz;
3. Heavy-duty construction;
4. Encapsulated 24VAC solenoid with captive plunger;
5. Double-beaded diaphragm seal;
6. External and internal manual bleed valve;
7. Minimum flow capacity of 20 gpm;
8. Pressure capacity range of 21 – 145 psi.;
9. 3.5' WC maximum pressure loss through valve at 25 gpm;
10. Minimum manufacturer's warranty of 2 years
11. The control valve shall be a Hunter PGV 201 in-line model

2.09 SPRINKLER HEADS

A. The irrigation system shall include rotary sprinkler heads with the following characteristics/features:

1. Stainless steel riser;
2. Water-lubricated, non-strippable gear drive;
3. Arc setting from 50° to 360° - adjustable through the top of the head cover;
4. Factory-installed rubber cover;
5. 12 nozzle choices with radius between 37' to 70' and flow range from 4 to 31.5 gpm;
6. Operating pressure range from 40 to 100 psi.;
7. Nozzle trajectory of 25°;
8. Reclaimed water capable;
9. Sprinkler heads shall be Hunter Model I-25-04-SS-R or approved equal.

PART 3 - EXECUTION

3.01 WELL

A. The pitless adapter for the new well shall be installed in strict accordance with manufacturer's recommendations. The casing for the new well shall be hole-sawed at a depth that will provide for a minimum 6.5 feet of bury over the center line of the discharge piping and 18 inches of casing height above the finished ground elevation after the pitless adapter is installed. The backfill from the bottom of the installed pitless adapter to 1 foot below finished grade shall be a 50-50 mix of Bentonite pellets and natural soil.

B. The CONTRACTOR shall clean and disinfect the pumps, piping, fittings, cables, level transmitter and all appurtenant equipment prior to installing into the well casing.

C. Connections in the drop pipes shall be made with NPS threaded fittings and shall be tightened to a torque of 200 foot-pounds. Threads of fittings shall receive a liberal coating of pipe thread compound conforming with the requirements of ASTM B88, Type K. All steel pipe shall meet the requirements of ASTM A-53 or A-120. Attach power cables securely to drop pipe every 5 feet for the first 20 feet of drop pipe above the pump, then every 10 feet with at least three wraps of waterproof tape. If not provided on the pump housings, provide cable guards to prevent abrasion of the cable. Install check valves immediately above the pump (if not integral with the pumps) and 40 feet above the pump. Provide one-quarter inch polypropylene safety ropes and attach securely to the pumps. Terminate the upper end of each rope with 25 feet of slack and attach the ropes securely inside the upper termination of the casings to prevent loss of the ropes. Do not allow cables to abrade during installation and do not allow pump to hang by cable during installation.

D. The pump shall be installed according to the manufacturer's recommendations. A qualified representative of the manufacturer shall supervise and approve the installation and provide all startup services. If recommended by the pump supplier, provide a casing centralizer(s) prior to pump installation. The pumps shall be carefully checked and tested after installation to ensure compliance with the Project Specifications. Pumps not meeting the operating requirements, in place, shall be replaced at no cost to the OWNER.

E. Following completion of the pump installation and drop piping, the pump shall be tested to determine field performance for satisfactory operation. Tests, at a minimum, shall measure amperage draw, shut off head, voltage and drawdown.

3.02 IRRIGATION SYSTEM

A. The layout of the irrigation system is schematic. Contractor shall make minor adjustments to the system as required to avoid physical elements, or to conform to other Site conditions. There shall be no conflicts between the irrigation system, mechanical process piping, and structural elements. The Contractor is responsible for maintaining coverage as indicated. Any such adjustment, and recording of any such changes, shall require prior approval from the Engineer.

B. Irrigation Line Clearances:

1. Same Trench: Minimum 6-inch horizontal clearance.
2. Crossing Lines: Minimum 2-inch vertical clearance.
3. Other Utilities: Minimum 12-inch clearance in any direction.

C. Plastic Pipe:

1. Use only strap wrenches on threaded joints.
2. Follow manufacturer’s recommendations in use of solvent element.

3. Do not subject unthreaded pipe joints to hydrostatic pressure for 48 hours after making joints.
4. Lay pipe on the prepared pipe base, snaking pipe from one side of trench to the other to provide for subsequent contraction.
5. Start backfill activities only after successful completion of hydrostatic pressure testing.
6. Pipe under improved areas (curbs, walks, asphaltic pavements): install inside sleeves. Provide a minimum cover of 18 inches where installed under improved areas.

D. Valves:

1. Install all valves with properly placed unions in order to facilitate removal

2. Secure the control valves to the wall of the Conex Control Building with appropriate supports/restraints.

E. Flushing:

1. Flush supply lines and laterals as follows: (a) Before installation of valves and fittings; (b) Reflush after installation of valves and fittings.

F. Testing & Inspection:

1. Do not perform hydrostatic pressure test on solvent welded pipeline and pipe joints for at least 48 hours after installations of zone to be tested.
2. Test system to 1.5x times system pressure of 70 psi for 30 minutes continuous operation without leaks.
3. Center load sections of pipe as necessary to prevent arching or whipping during testing.
4. Test lateral lines from the section control valves to the sprinkler heads for 1 hour, minimum.
5. Test main lines to section control valves until leak-free for a period of 48 hours.
6. Remove and replace defective piping, and perform testing until piping completely watertight at which time test may be considered successfully completed.
7. Test complete system and ensure uniform distribution as shown on Drawings, adjust as necessary to provide uniform coverage and correct any dry spots and to satisfy performance requirements.

END OF SECTION 33 11 36

SECTION 33 32 13
SUBMERSIBLE LIFT STATION

PART 1 - GENERAL

1.01 WORK INCLUDED

A. Work under this section includes, but is not limited to, furnishing and installing a factory built duplex pump station as indicated on the project drawings and herein specified "Runoff Lift Station", as necessary for proper and complete performance.

B. The principal items of equipment to be provided shall include two submersible centrifugal solids handling/macerating pumps, each with compatible quick discharge connector system, guide rails, anchor bolts, stainless steel lifting cables or chain with associated hardware, steel powder-coated station valves, internal piping, and a complete factory- built motor control center with circuit breakers, motor starters and automatic liquid level control system as specified herein to constitute a complete, working system.

C. The pumps and mechanical slide rail accessories shall be installed in a new concrete wet well as shown on the project plans. The pump control panel, valves, piping, fittings and lubricating oil reservoir shall be installed within a pre-formed fiberglass enclosure mounted directly on top of the concrete wet well structure as shown on the project plans.

D. Factory built pump station design, including materials of construction, pump features, and motor controls shall be in accordance with requirements listed under Part 2 – Products of this section.

1.02 REFERENCES

A. Publications listed below form part of this specification to extent referenced in the text by basic designation only. Consult latest edition of publication unless otherwise noted.

B. American National Standards Institute (ANSI) and American Water Works Association (AWWA)

1. ANSI B16.1, Cast iron pipe flanges and flanged fittings
2. ANSI/AWWA C115/A21.51, Cast/ductile iron pipe with threaded flanges
3. ANSI 253.1, Safety Color Code for Marking Physical Hazards
4. ANSI B40.1, Gauges, Pressure and Vacuum
5. AWWA C508, Single Swing Check Valves
6. AWWA C504, Plug Valves

C. American Society for Testing and Materials (ASTM)

1. ASTM A48, Gray Iron Castings
2. ASTM A126, Valves, Flanges, and Pipe Fittings
3. ASTM A307, Carbon Steel Bolts and Studs

4. ASTM F593, Stainless Steel Bolts, Hex Cap Screws, and Studs
5. ASTM A36, Structural Steel

D. Institute of Electrical and Electronics Engineers (IEEE)
1. ANSI/IEEE Std. 100, Standard Dictionary of Electrical Terms
2. ANSI/IEEE Std. 112, Test Procedure for Polyphase Induction Motors
3. IEEE Std. 242, Protection of Industrial and Control Power Systems

E. National Electric Code (NEC), National Electrical Manufacturers Association (NEMA)
1. NEC 701, National Electric Code article 701
2. NEMA Std. MG1, Motors and Generators

F. Miscellaneous References
1. Ten-State Standards Recommended Standards for Sewage Works
2. Hydraulic Institute Standard for Centrifugal, Rotary and Reciprocating Pumps
3. NMTBA and JIC Std. National Machine Tool Builders Association and Joint Industrial Council Standards

1.03 PERFORMANCE CRITERIA

A. Each pump must be designed to handle raw, unscreened, wastewater and stormwater. Pumps shall be furnished with a 4” discharge connection and be capable of delivering the flows indicated for the pumps in Part 2 – Products.

B. Site power furnished to pump station shall be 480V, 3-Phase – 4 Wire, 60 Hertz, maintained within industry standards.

1.04 SUBMITTALS

A. Submittals shall be made in accordance with Section 01 30 00. In addition, the following specific information shall be provided:

B. Product Data:
1. Prior to fabrication, the pump station manufacturer shall submit copies of submittal data for review and approval. Additional copies will be provided as required to comply with the contractor, supplier, or manufacturer's need for extra returned copies.
2. Submittal shall include shop drawings, electrical schematic diagrams, and support data as follows: Catalog cuts sheets reflecting characteristics for major items of equipment, materials of construction, major dimensions, motor data, pump characteristic curves to illustrate the design duty point capacity (GPM), head (FT), pump efficiency (np) and brake horsepower (BHP). Electrical components used in the motor branch and liquid level control shall be fully described.
3. Shop drawings shall provide layout of mechanical equipment and anchor bolt locations for the Quick Discharge Connector, base elbow, and guide rail

components. Pipe penetrations and station access clearances shall be dimensioned relative to the ***wet well*** centerline. Electrical schematic diagrams shall illustrate motor branch and liquid level control circuits to the extent necessary to validate function and integration of circuits to form a complete working system.

C. Operation and Maintenance Manuals

1. Installation shall be in accordance with written instructions provided by the pump station manufacturer. Comprehensive instructions supplied at time of shipment shall enable personnel to properly install, operate, and maintain all equipment supplied. Content and instructions shall assume operations personnel are familiar with pumps, motors, piping and valves, but lack experience on the exact equipment supplied.

2. Documentation shall be specific to the pump station supplied and collated in functional sections. Each section shall combine to form a complete system manual covering all aspects of equipment supplied by the station manufacturer. A separate section in the O&M Manual shall be designated for support data on any equipment supplied by others, even if mounted or included in overall station design; support data shall be provided by those supplying the equipment and inserted into the O&M Manual in this section. Instructions shall include the following as a minimum:

   a. Functional description of each major component, complete with operating instructions.

   b. Instructions for operating pumps and pump controls in all modes of operation.

   c. Calibration and adjustment of equipment for initial start-up, replacement of level control components, or as required for routine maintenance.

   d. Support data for commercially available components not produced by the station manufacturer, but supplied in accordance with the specifications, shall be supported by literature from the prime manufacturer and incorporated as appendices.

   e. Electrical schematic diagram of the pump station circuits shall be in accordance with NFPA70. Schematics shall illustrate, to the extent of authorized repair, pump motor branch, control and alarm system circuits including interconnections. Wire numbers and legend symbols shall be shown. Schematic diagrams for individual components, not normally repairable by the station operator, need not be included. Details for such parts shall not be substituted for an overall system schematic. Partial schematics, block diagrams, and simplified schematics shall not be provided in lieu of an overall system diagram.

   f. Mechanical layout drawing of the pump station and components, prepared in accordance with good commercial practice, shall provide installation dimensions and location of all pumps, valves and piping.

3. Operation and maintenance instructions that rely on vendor cut-sheets and literature that includes general configurations, or requires operations personnel to selectively read portions of the manual shall not be acceptable. Operation and maintenance

instructions must be specific to equipment supplied in accordance with these specifications.

1.05 QUALITY ASSURANCE

A. Upon request from the ENGINEER (or OWNER), the pump station manufacturer shall prove financial stability and ability to produce the station within the specified delivery schedules. Evidence of facilities, equipment and expertise shall demonstrate the manufacturer's commitment to long term customer service and product support.

B. Manufacturer must show proof of original product design and testing. Products violating intellectual property regulations shall not be allowed, as they may violate international law and expose the user or engineer to unintended liabilities. “Reverse- engineered” products fabricated to substantially duplicate the design of original product shall not be allowed, as they may contain substantial differences in tolerances and material applications addressed in the original design, which may contribute to product failure.

C. The term “pump manufacturer” or “pump station manufacturer” shall be defined as the entity which designs, machines, assembles, hydraulically tests and warranties the final product. Any entity that does not meet this definition will not be considered a “pump manufacturer” or “pump station manufacturer” and is not an acceptable supplier. For quality control reasons and future pump and parts availability, all major castings of the pump shall be sourced and machined in North America.

D. All pump openings and passages shall be of adequate size to pass 2.5” diameter spheres (minimum) and any trash or stringy material which can pass through an average house collection system.

E. The manufacturer’s technical representative shall inspect the completed installation, correct or supervise the correction of any defect or malfunction, and instruct operating personnel in the proper operation and maintenance of the equipment as described in Part 3 of this section.

1.06 MANUFACTURER’S WARRANTY

A. The pump station manufacturer shall warrant all equipment to be of quality construction, free of defects in material and workmanship. A written warranty shall include specific details described below.

1. In addition to defects in material and workmanship, fiberglass reinforced polyester station enclosures are warranted for five (5) years to be resistant to rust, corrosion, corrosive soils, effects of airborne contamination or physical failures occurring in normal service for the period of the pump station warranty.

2. All other equipment, apparatus, and parts furnished shall be warranted for one (1) year, excepting only those items that are normally consumed in service, such as light bulbs, oils, grease, packing, gaskets, O-rings, etc. The pump station manufacturer shall be solely responsible for warranty of the station and all components.

B. Components that fail to perform as specified by the Engineer, or as represented by the manufacturer, or as proven defective in service during the warranty period, shall be

replaced, repaired, or satisfactorily modified by the manufacturer.

C. It is not intended that the station manufacturer assume liability for consequential damages or contingent liabilities arising from failure of any vendor supplied product or part which fails to properly operate, however caused. Consequential damages resulting from defects in design, or delays in delivery are also beyond the manufacturer's scope of liability.

D. Equipment supplied by others and incorporated into a pump station or enclosure is not covered by this limited warranty. Any warranty applicable to equipment selected or supplied by others will be limited solely to the warranty, if any, provided by the manufacturer of the equipment.

E. This limited warranty shall be valid only when installation, use, and maintenance is performed in accordance with manufacturer recommendations. A start-up report competed by an authorized manufacturer's representative must be received by manufacturer within thirty (30) days of the initial date the unit is placed into service. The warranty shall become effective on the date of acceptance by the purchaser or the purchaser's authorized agent, or sixty (60) days after installation, or ninety (90) days after shipment from the factory, whichever occurs first.

PART 2 - PRODUCTS

2.01 UNITARY RESPONSIBILITY

A. In order to unify responsibility for proper operation of the complete pump station, it is the intent of these Specifications that all system components be furnished by a single supplier (unitary source). The pumping station must be of standard catalog design, totally warranted by the manufacturer.

2.02 MANUFACTURER

A. The specifications and project drawings generally depict equipment and materials manufactured by Vaughan (chopper pumps) and Gorman-Rupp (control panel, valve vault, valve gallery enclosure). It is not intended, however, to eliminate other products of equal quality and performance.

B. In event the Contractor obtains Engineer's approval for equipment substitution, the Contractor shall, at his own expense, make all resulting changes to the enclosures, wet well, piping or electrical systems as required to accommodate the proposed equipment. Revised detail drawings illustrating the substituted equipment shall be submitted to the engineer prior to bid.

2.03 WET WELL AND ABOVE-GROUND VALVE VAULT

A. Components of the Packaged Wastewater Lift Station, but not limited to, wet well duplex pump system, access hatches, and process piping.

1. Furnish all components factory-assembled to greatest extent possible; where field installation is required, provide piping, wiring, and other components as required for a complete installation.

B. Dimensions per construction drawings.

C. Identification: For each item of equipment, provide the manufacturer's name or trademark and model number on corrosion-resistant identification plate, cast integrally, stamped, or otherwise permanently marked in conspicuous place.

D. Wet Well

1. Construction: Pre-Cast, watertight concrete construction.

   a. Precast Concrete Wet Well (8' diameter, 6" fillet tapered bottom, anti-floating base flange, duplex pump rail bases and upper guide brackets with 2″ stainless steel rail pipe, aluminum hatch cover with no vent, conduit hubs, stainless steel float bracket, CI intake hub, stainless steel coupling for vent, and ballast buoyancy counterweight. Complete mechanical assembly by Gorman-Rupp or pre-approved equal.

   b. All alternates to the pre-cast concrete wet well shall be approved by the Engineer a minimum of 10 days prior to bid opening.

2. Contractor shall provide structural drawings for wet well, sealed by a Professional Engineer licensed in the State of Montana.

   a. Design precast concrete units to withstand load conditions in accordance with ACI 350.

   b. Design shall conform to wet well interior dimensions indicated on the construction drawings.

   c. Design shall evaluate discontinuities in the structure produced by openings.

   d. Design shall consider stresses induced during handling, shopping, and installation in order to avoid product cracking or other handling damage.

   e. Design loads for precast concrete units shall be indicated on the shop drawings.

3. Concrete Construction:

   a. Concrete minimum compressive strength: 5000 psi at 28 days.

   b. Concrete shall be sulfate resistant

   c. For non-machine cast products, the concrete shall be self-consolidating concrete

   d. Concrete Mix design:

      i. At minimum, ACI 211.1 shall be used for selection of proportions of concrete.

      ii. Submit mix designs per the submittal requirements listed above.

      iii. Material:

         - Aggregates conforming to ASTM C33/C33M.
         - Type I/II Portland Cement conforming to ASTM C150/C150M.

- Fly ash and pozzolans conforming to ASTM C618.
- Silica fume conforming to ASTM C1240.
- Ground granulated blast-furnace slag conforming to ASTM C989/C989M.
- Water conforming to ASTM C1602/C1602M.
- Air entraining admixtures conforming to ASTM C260/C260M.
- Chloride corrosion inhibitors conforming to ASTM C1582/C1582M.
- Accelerating, retarding, or water reducing admixtures conforming to ASTM C494/C494M.
- Reinforcing steel bars conforming to either ASTM A615/A615M or ASTM A706/A706M.
- Plain or deformed, welded wire reinforcement conforming to ASTM A1064/A1064M.
- Epoxy coated reinforcing bars conforming to ASTM A775/A775M.
- Epoxy coated welded wire reinforcement conforming to ASTM A884/A884M.
- Hot-dipped galvanizing for inserts conforming to ASTM A123/A123M.
- Preformed flexible joint sealants conforming to ASTM C990.

e. Grout:

i. Manufacturers:

- BASF: MasterFlow 928.
- Or approved equal.

ii. Grout shall be sulfate-resistant non-metallic, non-gas forming, non-shrink, pre-blended, and ready-to-use requiring only the addition of water at site.

iii. Grout shall conform to CRD-C621 and ASTM C1107/C1107M.

4. Access Hatches:

a. Manufacturers:

i. Halliday Products

ii. Bilco

iii. approved equal

b. Design Criteria:

i. Live load: 300 psf.

ii. Hatch shall be as shown on the contract drawings. Hatch shall provide proper access to pumps and trash basket for maintenance without interfering with

other accessories on the lift station slab.

c. Materials:

i. 1/4 inch aluminum diamond pattern cover with channel frame, continuous anchor flange, and full slab-height skirt.

ii. Type 316 stainless steel slam lock with fixed interior handle.

iii. Compression spring operators enclosed in telescopic tubes, with automatic hold-open arm with release handle locking cover arm in open position.

5. Finishing:

a. Exterior coating: Shop applied bituminous dampproofing per Section 07 11 13 – Bituminous Damproofing.

b. Interior coating: Manhole shall have a protective liner as per Section 03 11 15 – Corrosion Resistant Manhole Liner.

E. Valve Vault

1. The valve vault shall be mounted directly above the discharge piping in the wetwell and will include: 4" diameter ductile iron: flanged (FL) piping spools; FL tee; 90° FL elbows; FL check valves; FL plug valves;

2. The valve vault shall be fully enclosed within a fiberglass reinforced plastic enclosure with doors that allow complete access to both sides of the valve assembly, control panel, lubricating oil reservoir and appurtenances.

2.04 SUBMERSIBLE SEWERAGE PUMPS

A. Requirements

1. Furnish and install 2 submersible non-clog macerating wastewater pumps. Each pump shall be equipped with a suitably-sized, submersible electric motor connected for operation on 460 volts, 3-phase, 60 hertz, 3 or 4 wire service, with a minimum16 feet of submersible cable (SUBCAB) suitable for submersible pump applications. The power cable shall be sized according to NEC and ICEA standards and have P-MSHA Approval. Preliminary pump sizing indicates a 5 HP motor will be suitable to achieve the operating point outlined in 2.04.B.1 below:

B. Pump Design Configuration (Wet pit installation)

1. The pump shall be supplied with a mating cast iron 4 inch discharge connection and be capable of delivering 400 gpm at 27 ft. TDH. To further define the desired pump performance curve, two more points on the pump curve shall be: 340 gpm at 22' and 460 gpm at 32'. Shut off head shall be 50 ft. (minimum). The pumps shall be automatically and firmly connected to the discharge connection, guided by no less than two guide bars extending from the top of the station to the discharge connection. There shall be no need for personnel to enter the wet-well. Sealing of the pumping unit to the discharge connection shall be accomplished by a machined metal to metal watertight contact. Sealing of the discharge interface with a diaphragm, O-ring or

profile gasket will not be acceptable. No portion of the pump shall bear directly on the sump floor. Each pump shall be fitted with a minimum 15 ft of stainless steel lifting chain or stainless steel cable. The working load of the lifting system shall be 50% greater than the pump unit weight.

C. Pump Construction

1. Major pump components shall be of grey cast iron, ASTM A-48, Class 35B, with smooth surfaces devoid of blow holes or other irregularities. The lifting handle shall be of stainless steel. All exposed nuts or bolts shall be AISI type 316 stainless steel construction. All metal surfaces coming into contact with the pumped liquid, other than stainless steel or brass, shall be protected by a factory applied spray coating of acrylic dispersion zinc phosphate primer with a polyester resin paint finish on the exterior of the pump.

2. Sealing design shall incorporate metal-to-metal contact between machined surfaces. Critical mating surfaces where watertight sealing is required shall be machined and fitted with Nitrile or optional Viton rubber O-rings. Fittings will be the result of controlled compression of rubber O-rings in two planes and O-ring contact of four sides without the requirement of a specific torque limit.

3. Rectangular cross sectioned gaskets requiring specific torque limits to achieve compression shall not be considered as adequate or equal. No secondary sealing compounds, elliptical O-rings, grease or other devices shall be used.

4. Casing: Shall be of volute design, spiraling outward to the Class 125 flanged centerline discharge. Casing shall be cast ductile iron with all water passages to be smooth, and free of blowholes and imperfections for good flow characteristics. Casing shall include a replaceable Rockwell C60 alloy steel cutter to cut against the rotating impeller pump-out vanes for removing fiber and debris.

5. Impeller: Shall be 2 blade semi-open type with pump out vanes to reduce seal area pressure. Chopping/maceration of materials shall be accomplished by the action of the cupped and sharpened leading edges of the impeller blades moving across the cutter bar at the intake openings, with a set clearance between the impeller and cutter bar of 0.015"-0.025" cold. Impeller shall be cast alloy steel heat treated to minimum Rockwell C60 and dynamically balanced. The impeller shall be keyed to the shaft and shall have no axial adjustments and no set screws.

6. Cutter Bar: Shall be recessed into the pump casing and shall contain at least 2 shear bars extending diametrically across the intake opening to within 0.010-0.030" of the rotating cutter nut tooth, for the purpose of preventing intake opening blockage and wrapping of debris at the shaft area. Cutter bar shall be cast alloy steel heat-treated to minimum Rockwell C60.

7. Cutter Nut: The impeller shall be secured to the shaft using a cutter nut, designed to cut stringy materials and prevent binding using a raised, rotating cutter tooth. The cutter nut shall be cast alloy steel heat treated to minimum Rockwell C 60.

8. Upper Cutter: Shall be threaded into the casing behind the impeller, designed to

cut against the pump-out vanes and the impeller hub, reducing and removing stringy materials from the mechanical seal area. Upper cutter shall be cast alloy steel heat treated to minimum Rockwell C60. The upper cutter teeth are positioned as closely as possible to the center of shaft rotation to minimize cutting torque and nuisance motor tripping. The ratio of upper cutter cutting diameter to shaft diameter in the upper cutter area of the pump shall be 3.0 or less.

9. Pump Shafting: Shafting shall be heat treated alloy steel, with a minimum diameter of 1.5" in order to minimize deflection during solids chopping.

10. Bearing Housing: Shall be cast ductile iron, and machined with piloted bearing fits for concentricity of all components. Piloted motor mount shall securely align motor on top of bearing housing.

11. Thrust Bearings: Shaft thrust in both directions shall be taken up by two back-to-back mounted single-row angular contact ball bearings, with a minimum L-10 rated life of 100,000 hours. Overhang from the centerline of the lower thrust bearing to the seal faces shall be a maximum of 1.7". A third mechanical seal (two in motor) shall also be provided to isolate the bearings from the pumped media. The third seal, as well as the thrust bearings shall be oil bath lubricated in the bearing housing by ISO 46 hydraulic oil. Shaft overhang exceeding 1.7" from the center of the lowest thrust bearing to the seal faces shall be considered unacceptable.

12. Pump Mechanical Seal: The mechanical seal shall be located immediately behind the impeller hub to maximize the flushing available from the impeller pump-out vanes. The seal shall be a cartridge-type mechanical seal with Viton O-rings and silicon carbide or tungsten carbide faces. This cartridge seal shall be pre-assembled and pre-tested so that no seal settings or adjustments are required from the installer. Any springs used to push the seal faces together must be shielded from the fluid to be pumped. The cartridge shall also include a 17-4PH, heat-treated seal sleeve and a cast ductile iron seal gland.

13. Automatic Oil Level Monitor: An oil level switch shall be mounted at the top of the wet well, with a hose feeding down to the side of the bearing housing to monitor oil level and shut off the motor in event of low oil level. A relay shall be included for mounting in the motor control panel.

14. Shaft Coupling: The submersible motor shall be close coupled directly to the pump shaft using a solid sleeve coupling, which is keyed to both the pump and motor shafts. Slip clutches and shear pins between the shaft and the motor are considered unacceptable.

15. Nameplate: The nameplate giving the manufacturer's model and serial number, rated capacity, head, speed and all pertinent data shall be stainless steel and mounted to a larger stainless steel plaque. Warning tags and lubricating oil reservoir will be mounted to this same plaque. Plaque is to be fastened to wall or structure adjacent to pump.

16. Guide Rail System: Provide a guide rail system consisting of two galvanized or stainless steel guide rails (by others), cast ductile iron pump guide bracket, cast

ductile iron discharge elbow with mounting feet and Class 125 flanges, 316 stainless steel upper guide rail mounting bracket, and 316 stainless steel intermediate guide rail stiffener bracket every 10 feet (3 m).

17. Premium Surface Preparation: Solvent wash, sandblast, and coat with minimum 30 MDFT Tnemec Perma-Shield PL Series 431 epoxy (except motor).

D. Cooling System

1. Motors are sufficiently cooled by the surrounding environment or pumped media. A water jacket is not required.

E. Cable/Conduit/Tubing Entry Seal

1. The cable/conduit/tubing entry seal design shall preclude specific torque requirements to insure a watertight and submersible seal. The entry shall consist of a single cylindrical elastomer grommet, flanked by washers, all having a close tolerance fit against the cable/conduit/tubing outside diameter and the entry inside diameter and compressed by the body containing a strain relief function, separate from the function of sealing the cable. The assembly shall provide ease of changing the cable/conduit/tubing when necessary using the same entry seal. ***The entry junction chamber and motor shall be separated by a stator lead sealing gland or terminal board, which shall isolate the interior from foreign material gaining access through the pump top. Epoxies, silicones, or other secondary sealing systems shall not be considered acceptable***.

F. Motor – the submersible pump motor shall be:

1. U/L or FM listed and suitable for Class I, Group C & D, Division I hazardous locations, rated at 7 ½ HP, 1,900 RPM, 480 Volts, 60 Hz and 3 phase, 1.15 service factor with Class F insulation. Motor shall have tandem mechanical seals in oil bath and dual moisture sensing probes. Moisture probes must be connected to indicate water intrusion. The lower motor seal shall be exposed only to the lubricant in the pump bearing housing, with no exposure to the pumped media. Motor shall include two normally closed automatic resetting thermostats connected in series and embedded in adjoining phases. The thermostats must be connected per local, state, and/or the National Electric Code to maintain hazardous location rating and to disable motor starter if overheating occurs. Motor frame shall be cast iron, and all external hardware and shaft shall be stainless steel. Motor shall be sized for non-overloading conditions.

2. Induction type with a squirrel cage rotor, shell type design, housed in an air filled, watertight chamber. The stator windings shall be insulated with moisture resistant Class H insulation rated for 356°F. The stator shall be insulated by the trickle impregnation method using Class H monomer-free polyester resin resulting in a winding fill factor of at least 95%. The motor shall be inverter duty rated in accordance with NEMA MG1, Part 31. The stator shall be heat-shrink fitted into the cast iron stator housing. The use of multiple step dip and bake-type stator insulation process is not acceptable. The use of bolts, pins or other fastening devices requiring penetration of the stator housing is not acceptable. The motor shall be designed for

continuous duty handling pumped media of 40°C (104°F) and capable of no less than 30 evenly spaced starts per hour. The rotor bars and short circuit rings shall be made of cast aluminum. Thermal switches set to open at 125°C (260°F) shall be embedded in the stator end coils to monitor the temperature of each phase winding. These thermal switches shall be used in conjunction with and supplemental to external motor overload protection and shall be connected to the control panel. The junction chamber containing the terminal board, shall be hermetically sealed from the motor by an elastomer compression seal. Connection between the cable conductors and stator leads shall be made with threaded compression type binding posts permanently affixed to a terminal board. The motor and the pump shall be produced by the same manufacturer.

3. The combined service factor (combined effect of voltage, frequency and specific gravity) shall be a minimum of 1.15. The motor shall have a voltage tolerance of plus or minus 10%. The motor shall be designed for operation up to 40°C (104°F) ambient and with a temperature rise not to exceed 80°C. A performance chart shall be provided upon request showing curves for torque, current, power factor, input/output kW and efficiency. This chart shall also include data on starting and no-load characteristics. The motor horsepower shall be adequate so that the pump is non-overloading throughout the entire pump performance curve from shut-off through run-out.
4. The motor shall be capable of continuous submergence underwater without loss of watertight integrity to a depth of 65 feet or greater.
5. The power cable shall be sized according to the NEC and ICEA standards and shall be of sufficient length to reach the junction box without the need of any splices. The outer jacket of the cable shall be oil resistant chlorinated polyethylene rubber. The cable shall be capable of continuous submergence underwater without loss of watertight integrity to a depth of 65 feet or greater.

G. Shielded Power Cable:

1. The power cable shall be sized according to the NEC and ICEA standards and shall be of sufficient length to reach the junction box without the need of any splices. The power cable shall be of a shielded design in which an overall tinned copper shield is included and each individual phase conductor is shielded with an aluminum coated foil wrap. The outer jacket of the cable shall be oil resistant chlorinated polyethylene rubber. The cable shall be capable of continuous submergence underwater without loss of watertight integrity to a depth of 65 feet or greater.
2. The cable shall be suitable for use with Gorman-Rupp Integrinex™ advanced controls.

H. Bearings

1. The pump shaft shall rotate on two bearings. Motor bearings shall be permanently grease lubricated. The upper bearing shall be a single deep groove ball bearing. The lower bearing shall be a two row angular contact bearing to compensate for axial

thrust and radial forces. ***Single row lower bearings are not acceptable***. The minimum L10 bearing life shall be 50,000 hours at any usable portion of the pump curve.

I. Protection

1. All stators shall incorporate thermal switches in series to monitor the temperature of each phase winding. The thermal switches shall open at 125°C (260°F), stop the motor and activate an alarm.
2. A leakage sensor shall be available as an option to detect water in the stator chamber. The Float Leakage Sensor (FLS) is a small float switch used to detect the presence of water in the stator chamber. When activated, the FLS will stop the motor and send an alarm both local and/or remote. ***Use of voltage sensitive solid state sensors and trip temperature above 125°C (260°F) shall not be allowed***.
3. The thermal switches and FLS shall be connected to a Mini CAS (Control and Status) monitoring unit. The Mini CAS shall be designed to be mounted in any control panel.
4. Note: FLS not available in NZ configuration.

J. Modifications

1. Explosion-proof Pumps.

2.05 ELECTRICAL CONTROL COMPONENTS

A. Contractor shall furnish all labor, materials, equipment and incidentals required to provide motor control panel as specified herein.

B. The motor control panel shall be assembled and tested by a shop meeting U.L. Standard 508 for industrial controls. The motor and control panel shall be assembled and tested by the same manufacturer supplying the pump so as to insure suitability and assurance of experience in matching controls to motors and to insure single source responsibility for the equipment.

C. The control panel shall comply with the NEC regulations. The panel shall contain all components required by the pump manufacture for starting and protection of the motor. Any features required by the pump manufacture for warranty of the pump shall be included in the control panel.

D. The level control system shall start one pump when the liquid level in the wet well rises to the “lead pump start level”. When the liquid is lowered to the “pump stop level”, the system shall stop this pump. These actions shall constitute one pumping cycle. Should the wet well level rise to the “lag pump start level”, the system shall start the second pump so that both pumps are operating to pump down the well. Both pumps shall stop at the same “stop” level.

E. The control panel shall alternate pumps (lead pump) between starts. Alternation shall occur at the end of each pumping cycle.

2.06 CONSTRUCTION

A. The controls for the pump shall be contained in a steel enclosure meeting NEMA 3R requirements with a hinged door and neoprene gasket. The sub-panel shall be painted steel.

B. A nameplate shall be permanently affixed to the panel and include the model number, voltage, phase, hertz, ampere rating and horsepower rating. A warning label against electric shock shall be permanently affixed to the outer door.

C. Hand-Off-Auto switches shall be provided for each pump. All switches and push buttons shall be mounted on a corrosion-resistant operator safe dead-front with a corrosion resistant full length hinge.

D. Pilot lights shall be furnished for each pump for run status and seal failure. All pilot lights shall be mounted on the corrosion-resistant operator safe dead-front.

E. All pilot lights and switches shall be properly labeled as to function. The labels shall be ¾″ by 3″ two layer laminated plastic, white on black background. The labels shall be custom engraved by the control panel manufacturer and fastened to the dead-front.

F. Pump control panel shall incorporate seal failure relays into control operation. Should water penetrate the lower seal of the pump, an adjustable seal failure relay shall be energized via the pump manufacturer's seal fail probe, alerting the operator of impending pump failure. The relay shall energize a pilot light on the operator dead-front. The relay shall be 120VAC and have an adjustment of 4.7 to 100k ohms.

G. The incoming power shall be 480 volts, 3 phase, 60 hertz service. Terminal blocks with box type lugs shall be supplied to terminate all wiring for floats and heat and seal sensors for the pump, if required. The pump leads shall be terminated at the overload relay or at box type terminal blocks. The terminal blocks for the float connections shall be on the pump controller.

H. A circuit breaker shall be used to protect from line faults. The panel shall have a main power disconnect interconnected with a handle on the dead-front for safety, and to disconnect the pump from the incoming power. Circuit breaker shall be thermal magnetic and sized to meet NEC requirements for motor controls.

I. Control voltage shall be 120 VAC and may be accomplished by the means of a transformer or available line voltage. A control fuse shall protect and isolate the control voltage from the line. Control transformer shall have primary and secondary circuit protection.

J. Wire ties shall be used to maintain panel wiring in neat bundles for maintenance and to prevent interference with operating devices. All wiring shall be color coded to facilitate maintenance and repair of the control panel. Where a color is repeated, number coding shall be added. A schematic shall be permanently attached to the inside surface of the front door.

K. All ground connections shall be made with ring tongue terminals and star washers to assure proper ground.

L. A duplex pump controller shall be provided for control logic. Pump controller shall be relay logic utilizing conventional wiring. The pump control panel shall be completely self-contained and will require no additional hardware, software, or accessories for full operation. The pump controller shall be UL listed for Class I, Division 2.

M. The high level alarm shall be the only external light on the pump control panel.

2.07 VARIABLE FREQUENCY DRIVE

A. A variable speed drive will be provided sized to the appropriate horsepower for each pump. Furnish complete VFD as specified herein or in the equipment schedule for loads designated to be variable speed. VFD's shall be user-selectable for either constant or variable torque loads.

B. The VFD shall be a six-pulse input design. The VFD shall be of a PWM output design utilizing current IGBT inverter technology and voltage vector control of the output PWM waveform and shall output a waveform that closely approximates a sine wave.

C. The manufacturer of the VFD shall demonstrate a continuous period of manufacturing and development of VFD's for a minimum of 40 years. VFD's that are brand-labeled are not acceptable. The VFD shall produce an output waveform capable of handling maximum motor cable distances of up to 1,000 ft. (unshielded) without tripping or de-rating.

D. VFD shall automatically boost power factor at lower speeds. In variable torque applications, the VFD shall provide a CT-start feature and be able to provide full torque at any speed up to the base speed of the motor. In either CT or VT mode, the VFD shall be able to provide its full rated output current continuously and 110% of rated current for 60 seconds.

E. Switching of the input power to the VFD shall be possible without interlocks or damage to the VFD at a minimum interval of 2 minutes. Switching of power on the output side between the VFD and the motor shall be possible with no limitation or damage to the VFD and shall require no additional interlocks.

F. The VFD shall include an integral RFI filter conforming to the A2 standard as a minimum. VFD shall provide full galvanic isolation with suitable potential separation from the power sources (control, signal, and power circuitry within the drive) to ensure compliance with PELV requirements and to protect PLC's and other connected equipment from power surges and spikes. All inputs and outputs shall be optically isolated. Isolation boards between the VFD and external control devices shall not be required.

G. The VFD shall provide internal DC link reactors to minimize power line harmonics and to provide near unity power factor. DC Link reactor shall be installed so that power fluctuations to the DC Capacitors shall be reduced to increase Capacitor life. VFD's without a DC link reactor shall provide a 5% impedance line side reactor and provide spare capacitors.

H. VFD shall have input surge protection utilizing MOV's, spark gaps, and Zener diodes to

withstand surges of 2.3 times line voltage for 1.5 msec. Printed Circuit boards shall be conformal coated to reduce the corrosion effect from environmental gases and other conditions. The conformal coating must meet IEC 61721-3-3, Class 3C2. VFD shall include circuitry to detect phase imbalance and phase loss on the input side of the VFD.

I. VFD shall include current sensors to monitor all three-output phases to detect and report phase loss or unbalance or other power issues to the motor. The VFD will identify which of the output phases is low or lost.

J. VFD shall provide an alphanumeric backlit display keypad (LCP) which may be remotely mounted using a standard 9-pin cable. VFD may be operated with keypad disconnected or removed entirely. The remote mount must meet N4 rating. Keypad may be disconnected during normal operation without the need to stop the motor or disconnect power to the VFD

K. All VFD's shall be of the same series and shall utilize a common control card and LCP (keypad/display unit) throughout the rating range. The control cards and keypads shall be interchangeable through the entire range of drives used on the project.

L. A battery back-up shall be provided to maintain internal clock operation during power interruptions. Battery life shall be no less than 10 years of normal operation.

M. The VFD shall have an adjustable output switching frequency.

N. Four complete programming parameter setups shall be provided, which can be locally selected through the keypad or remotely selected via digital input(s), allowing the VFD to be programmed for up to four alternate control scenarios without requiring parameter changes.

O. In each programming set up, independent acceleration and deceleration ramps shall be provided. Acceleration and deceleration time shall be adjustable over the range from 0 to 3,600 seconds to base speed.

P. The VFD shall have four programmable "Bypass frequencies" with adjustable bandwidths to prevent the driven equipment from running at a mechanically resonant frequency. The feature shall offer a Semi-Automatic program to simplify the set-up. In each programming setup, independent current limit settings, programmable between 50% and 110% of the drives output current rating, shall be provided.

Q. The VFD will include a "loss of follower" function to detect the loss of process feedback or reference signals with a live-zero value and a user-selectable choice of responses (go to set speed, min speed, max speed, stop, stop, and trip). An initial ramp function shall be available to provide a user-selectable ramp, up to 60 seconds, for applications requiring a faster or slower ramp than the normal ramp. A Dual Ramp feature shall include a Check Valve Ramp and a final Ramp feature. The Check Valve Ramp shall be programmable to gently seat a check valve and reduce the potential of damage from excess pressure while shutting-down the system. Both time and end speed shall be programmable. On the Final Ramp, the VFD shall be programmable to quickly stop the motor after seating of a check valve or for a more rapid stopping than the normal ramp down setting.

R. The ambient operating temperature of the VFD shall be -10ºC to 50ºC (14 to 1227F), with a 24- hour average not to exceed 45ºC. Elevation to 3,300 feet (1000 meters) without de-rating. VFD shall provide full torque to the motor, given input voltage fluctuations of up to +10% to -15% of the rated input voltage (525 to 690VAC, 380 to 480VAC, or 200 to 240VAC). Line frequency variation of ± 2% shall be acceptable.

S. The VFD shall be equipped with a standard RS-485 serial communications port and front-of-drive accessible USB port. Danfoss FC or ModBus RTU communications shall be integrally mounted. VFD Keypad shall be mounted and accessible from the exterior of the control panel door in a NEMA 4 configuration. Keypads mounted internally shall not be allowed.

2.08 PANEL

A. The Panel shall be equipped with the following additional features;

1. High level alarm light (Flashing)
2. High level alarm horn
3. Test-Off-Auto switch for alarm
   a. Lift Station/Screen Building – Alarm/Horn/Test off auto switch to be integrated into lift station panel and integrated into local remote monitoring and messaging system, see Section 40 68 26 – Remote Monitoring System.
   b. Blower/UV Building – Alarm/Horn/Test off auto switch to be integrated into local remote monitoring and messaging system. See 40 68 26 – Remote Monitoring System.
4. Elapsed time meter (per pump)
5. Seal failure light
6. Lightning arrestor
7. 110-volt convenience outlet
8. Minimum 1000W outdoor duty electric heater with ceramic element, overheat & tip-over protection with internal thermostat control. Byplus Model BGP2001-15 or equal.

2.09 WIRING

A. The control panel, as furnished by the manufacturer, shall be completely wired. The Contractor shall field connect the power feeder lines to the main terminal block, final connections to the remote alarm devices, and the connections between the pump and the pump motor control. All wiring, workmanship, and schematic wiring diagrams shall be in compliance with applicable standards and specifications set forth by the National Electric Code (NEC).

B. All user serviceable wiring shall be type MTW or THW, 600 volts, and shall be color coded as follows:

1.	Line and load circuits, AC or DC power	Black
2.	AC control circuit less than line voltage	Red
3.	DC control circuit	Blue
4.	Interlock control circuit, from external source.	Yellow
5.	Equipment grounding conductor	Green
6.	Current carrying ground.	White
7.	Hot with circuit breaker open.	Orange

C. Control circuit wiring inside the panel, with the exception of internal wiring of individual components, shall be 16-gauge minimum, type MTW or THW, 600 volts. Power wiring shall be 14-gauge minimum.

D. Motor branch and other power conductors shall not be loaded above the temperature rating of the connected termination. Wires shall be clearly numbered at each end in accordance with the electrical diagrams. All wires on the sub-plate shall be bundled and tied.

E. Wires connected to components mounted on the enclosure door shall be bundled and tied in accordance with good commercial practice. Bundles shall be made flexible at the hinged side of the enclosure. Adequate length and flex shall be provided to allow the door to swing to its full open position without undue stress or abrasion on the wire or insulation. Bundles shall be held in place on each side of the hinge by mechanical fastening devices.

2.10 CONDUIT

A. All conduit and fittings shall be UL listed. Liquid tight flexible metal conduit shall be constructed of smooth, flexible galvanized steel core with smooth abrasion resistant, liquid tight, polyvinyl chloride cover. Conduit shall be supported in accordance with articles 346, 347, and 350 of the National Electric Code. Conduit shall be sized according to the National Electric Code.

2.11 GROUNDING

A. The pump control manufacturer shall provide a common ground bar mounted on the enclosure back plate. The mounting surface of the ground bar shall have any paint removed before making final connections. The Contractor shall make the field connections to the main ground lug and each pump motor in accordance with the National Electric Code.

2.12 IDENTIFICATION

A. A permanent corrosion resistant name plate(s) shall be attached to the control and include the following information:

1. Equipment serial number
2. Control panel short circuit rating

3. Supply voltage, phase and frequency
4. Current rating of the minimum main conductor
5. Electrical wiring diagram number
6. Motor horsepower and full load current
7. Motor overload heater element
8. Motor circuit breaker trip current rating
9. Name and location of equipment manufacturer

B. Control components shall be permanently marked using the same identification shown on the electrical diagram. Identification label shall be mounted adjacent to the device.

C. Switches, indicators, and instruments shall be plainly marked to indicate function, position, etc. Marking shall be mounted adjacent to and above the device.

2.13 SENSING & CONTROLS

A. Level Sensing Transducer

1. Station manufacturer shall supply one submersible pressure transmitter with a full scale (FS) range of 0 to 5 psi with a 2-wire loop powered 4-20mA output. The transmitter shall be PMI model 710-140-00005-009-815-50' or equal and shall be rated for lift station environment. Transmitter shall be supplied with required mounting hardware.
2. The level sensing transducer(s) shall be a non-fouling design with non-clogging PTFE coated elastomeric diaphragm, specifically designed for adverse environments encountered in wastewater applications.
3. Proof pressure shall be minimum 1.5 x FS and burst pressure shall be 2 x FS;
4. Static accuracy shall be ±0.25% FSO using the BFSL method;
5. Resolution shall be +0.0001% FS;
6. All wetted materials shall be 316 stainless steel or titanium; FKM; PTFE; polyurethane or ETFE – the unit shall have a protection rating of IP 68, NEMA 6P;
7. Thermal error shall be ±-.10% FSO/°C and the compensated temperature range shall be 0°C to 50°C;
8. Input current shall be 20 mA maximum;
9. Output shall be 4-20 mA, 0-5 VDC, 0-2.5 VDC;
10. Capability to re-zero after installation for optimum accuracy and the span shall not be affected;
11. Insulation resistance shall be 100 mega ohm at 50 VDC;
12. The transducer(s) shall be CE compliant (EN 61326-1:2013 and 61326-2-3:2013; UL, CUL and FM compliant – Class I, II, III, Div. 1, Groups A, B, C, D, E, F & G;
13. Cable pull strength shall be a minimum of 200 lb;

14. Cable shall have 4 conductors, each 22 AWG with a molded polyurethane cable seal;
15. Transducer(s) and cable assembly shall be the KPSI 705 as manufactured by TE Connectivity Sensors.
16. The level control system shall be provided with field-adjustable set points for speed reference commands. Setpoint adjustments will be made using the operator keypad on the controller HMI or the mounted touchscreen. The maximum field adjustable setpoint range is 0.0 ft W.C. (4794.20) to 10.0 ft W.C. (4804.20).
17. Upon operator selection of "Automatic", the lead pump shall start when the wet well level rises to the "lead pump start level". *The pump shall start at a prescribed speed and ramp up or down in response to the speed at which the liquid level in the wet well is rising or falling. Sensing and responding to the rate of rise and fall of liquid level in the wet well shall be intrinsic to the control system operating protocol.* A rising wet well liquid level will induce the control system to increase the pump speed through control of the VFD typical operating range. A falling wet well liquid level will induce the control system to decrease the pump speed through control of the VFD typical operating range. The lowest VFD range shall be determined by the pump manufacturer such that it will not result in damage to the pump through lack of cooling. When the wet well liquid level reaches the "lead pump stop", the controller shall stop the lead pump. These actions shall constitute one pumping cycle. Should the wet well level continue to rise beyond the lead pump maximum VFD frequency, the controller shall start the lag pump when the "lag pump on" level is reached. At this point, the operating pumps shall ramp up until the rpm's match, after which, all pumps shall ramp up and down together in response to the speed at which the liquid level rises or falls. Once the wet well liquid level reaches the "lead pump stop" level, the controller shall stop all operating pumps and the typical lead pump control scenario shall be re-instituted.
18. The level control system shall activate the "high water alarm" in the event that the liquid level continues to rise to a pre-determined setpoint. The high water alarm shall provide a signal to the Remote Monitoring System located in the Screening Building. The alarm requires a manual reset at the Lift Station Control Panel.
19. The level control system shall alert the operator of a low liquid level in the event the wet well level reaches the preset low water alarm set point where the alarm contact will energize an alarm relay. The controller will flash a low water alarm banner on the HMI screen to indicate such. Low water alarm will also cause interruption of electrical power to all pump motors. Power will be automatically be restored to the motors, without manual reset, when the wet well level rises to the "lead pump on" and the typical lead pump control scenario shall be re-instituted.
20. The level control system shall utilize a primary level-sensing transducer with redundant backup floats for: "lead pump start"; "lag pump start"; "lead pump stop" and "high water level alarm".

B. Backup Floats

1. A completely independent intrinsically safe two (2) float backup alarm system shall be provided. The float system shall provide backup alarm and control functions in

the event of high level and low level conditions and shall control the pumps start and stops in the event that the level transducer system fails.

2. Under the backup float operation, pumps shall operate in duplex on/off operational sequence with: “Pump On” at HWL; “Pump off” at LWL, and lag pump on at “Lag Pump On” level while at the same time initiating an alarm condition.

3. Intrinsically safe relays shall be provided for each float. Provide sealed, mercury-free float switches. Provide two floats with timer and a sufficient length of cable as required for an un-spliced length. All floats shall have the same length of cable to allow for full height adjustment and interchangeability. Stainless steel float mounting brackets with strain relief grommets shall be provided, to allow for adjustment of the float levels. Floats shall have weighted cable to minimize the effects of turbulence. Additional float wire supports shall be provided to prevent float wires from crossing hatch openings.

2.14 ALARM LIGHT

A. Station manufacturer shall supply one 115 volt AC alarm light fixture with vapor-tight red globe, guard, conduit box and mounting base. The design must prevent rain water from collecting in the gasketed area of the fixture, between the base and globe. The alarm light will be shipped loose for installation by the Contractor.

2.15 ALARM FLASHER

A. The alarm light circuit shall be equipped with a repeat cycle timer causing the alarm light to flash. Flash rate shall be approximately 1 second. (1/2 second on and off).

PART 3 - EXECUTION

3.01 EXAMINATION

A. The Contractor shall off-load lift station components at the installation site using equipment of sufficient size and design to prevent injury or damage. Station manufacturer shall provide written instruction for proper handling. Immediately after off- loading, Contractor shall inspect the entire pump station and appurtenances for shipping damage or missing parts. Any damage or discrepancy shall be noted in a written claim with shipper prior to accepting delivery. Validate all station serial numbers and parts lists with shipping documentation. Notify the Engineer and manufacturer's representative of any unacceptable conditions noted with shipper.

3.02 INSTALLATION

A. The Contractor shall install, level, align and lubricate all equipment associated with the pump station as indicated on the project drawings, and as outlined in the O&M manual provided with the equipment. Installation must be in accordance with written instructions supplied by the manufacturer at time of delivery.

B. Check motor and control data plates for compatibility to site voltage. Install and test the station ground prior to connecting line voltage to station control panel.

C. Prior to applying electrical power to any motors or control equipment, check all wiring for tight connection. Verify that all protective devices (fuses and circuit breakers) conform to project design documents. Manually operate circuit breakers and switches to ensure operation without binding. Open all circuit breakers and disconnects before connecting utility power. Verify line voltage, phase sequence and ground before actual start-up.

3.03 FIELD QUALITY CONTROL

A. Operational Test

1. Prior to acceptance by Owner, an operational test of all pumps, and control systems shall be conducted to verify that the installed equipment meets the purpose and intent of these specifications. Tests shall demonstrate that all equipment provided is electrically, mechanically, structurally, and otherwise acceptable; that it is safe and in optimum working condition; and that it conforms to the specified operating characteristics.

2. After construction debris and foreign material has been removed from the wet well, the Contractor shall supply clear water volume adequate to operate station through several pumping cycles. Observe and record operation of pumps, discharge gauge readings, ampere draw, pump controls, and liquid level controls. Check calibration of all instrumentation equipment, test manual control devices, and automatic control systems. Be alert to any undue noise, vibration or other operational problems.

3.04 MANUFACTURER’S START-UP SERVICES

A. Coordinate station start-up with the manufacturer's technical representative. The representative or factory service technician will inspect the completed installation, calibrate and adjust instrumentation, correct or supervise correction of defects or malfunctions, and instruct operating personnel in proper operation and maintenance procedures as per Sections 01 75 00, 01 78 23 and 01 79 00. The pump station warranty is contingent on receipt of a complete start-up report in accordance with specification Section 1.06.E.

3.05 CLEANING

A. Prior to acceptance, inspect interior and exterior of pump station for dirt, splashed material or damaged paint. Clean or repair accordingly. Remove from the job site all tools, surplus materials, scrap and debris.

3.06 PROTECTION

A. The pump station should be placed into service immediately upon completion of field startup. If operation is delayed, the station shall be stored and maintained per the manufacturer's written instructions until it is ready for use.

END OF SECTION 33 32 13

SECTION 33 32 16
DUPLEX GRINDER PUMP STATION

PART 1 - GENERAL

1.01 RELATED DOCUMENTS

A. Drawings and Special Provisions of the Contract, including general and Supplementary Conditions and Division 01 Specifications Sections, apply to this Section.

1.02 SUMMARY

A. This section covers design requirements, manufacturing practices, and performance requirements for duplex grinder pump stations and associated structures.

B. The values stated in inch-pound units are to be regarded as standard.

C. The manufacturer shall furnish a complete factory-built and tested wetwell/drywell duplex grinder pump station, each consisting of grinder pumps suitably mounted in a basin constructed of fiberglass reinforced polyester resin, NEMA 6 electrical quick disconnect, pump removal system, stainless steel discharge assembly/shut off valve, anti-siphon valve/check valve, each assembled in the basin, electrical alarm panel and all necessary internal wiring and controls. For ease of serviceability, all pump motor/grinder units shall be of like type and horsepower throughout the system.

D. The manufacturer and local vendor pump station shall verify that the buoyancy of the lift station, for the specific project site conditions, will not sufficient to exert excessive upward lift on the lift station structure that might result in any damage. All required weighting to oppose buoyancy forces will be provided by the contractor and or vendor.

1.03 SUBMITTALS

A. Shop drawings of the duplex grinder pump station showing a minimum of the following and attesting that the tank furnished meets the applicable specifications:

1. Invert elevation, rim elevation, access riser elevations and dimensions, diameter or dimensions, wall thickness, base dimensions, tank pipe penetrations and distances between them.

B. Manufacturer information on the following:

1. Access Risers
2. HDPE Gasketed Lid
3. Pipe Grommets for Pipe Penetrations
4. E/One Sentry Duplex Protect Plus Package

5. Alarm Panel
6. Generator Receptacle
7. Pumps
8. Grinders
9. Buoyancy Calculations

C. Manufacturer's certification attesting that the tank, access riser, access lid, pipe grommets, pumps, grinders, controls, alarm panel, internal piping, buoyancy calculation and fittings furnished meet the applicable specifications.

1.04 REFERENCED DOCUMENTS

A. E/ONE Extreme Series – DH272/DR272 Typical Installation Instructions & Warranty Information

B. E/ONE Extreme Series – D-Series Wetwell/Drywell Grinder Pump Station with Wired Level Sensor, Typical Specifications

PART 2 - PRODUCTS

2.01 GENERAL

A. Furnish E/ONE Extreme Series DH272-129 Duplex Grinder Pump Station and all associated access riser, HDPE gasketed lid, two (2) grinder pumps, control/alarm panel, wiring, pipe grommets for pipe penetrations, and all internal piping, valving or approved equal.

2.02 PUMP

A. The pump shall be a custom designed, integral, vertical rotor, motor driven, solids handling pump of the progressing cavity type with a single mechanical seal. Double radial O-ring seals are required at all casting joints to minimize corrosion and create a protective barrier. All pump castings shall be cast iron, fully epoxy coated to 8-10 mil Nominal dry thickness, wet applied. The rotor shall be through-hardened, highly polished, precipitation hardened stainless steel. The stator shall be of a specifically compounded ethylene propylene synthetic elastomer. This material shall be suitable for domestic wastewater service. Its physical properties shall include high tear and abrasion resistance, grease resistance, water and detergent resistance, temperature stability, and wear resistance. Buna-N is not acceptable as a stator material.

B. The pump shall be able to operate in the range of: 12-13 gpm @ 28-32 total dynamic head in feet of water.

2.03 GRINDER

A. The grinder shall be placed immediately below the pumping elements and shall be direct-driven by a single, one-piece motor shaft. The grinder impeller (cutter wheel) assembly shall be securely fastened to the pump motor shaft by means of a threaded connection attaching the grinder impeller to the motor shaft. Attachment by means of pins or keys will not be acceptable. The grinder impeller shall be a one-piece, 4140 cutter wheel of the rotating type with inductively hardened cutter teeth. The cutter teeth shall be inductively hardened to Rockwell 50 – 60c for abrasion resistance. The shredder ring shall be of the stationary type and the material shall be white cast iron. The teeth shall be ground into the material to achieve effective grinding. The shredder ring shall have a staggered tooth pattern with only one edge engaged at a time, maximizing the cutting torque. These materials have been chosen for their capacity to perform in the intended environment as they are materials with wear and corrosive resistant properties.

This assembly shall be dynamically balanced and operate without objectionable noise or vibration over the entire range of recommended operating pressures. The grinder shall be constructed so as to minimize clogging and jamming under all normal operating conditions including starting. Sufficient vortex action shall be created to scour the tank free of deposits or sludge banks which would impair the operation of the pump. These requirements shall be accomplished by the following, in conjunction with the pump:

1. The grinder shall be positioned in such a way that solids are fed in an upward flow direction.

2. The maximum flow rate through the cutting mechanism must not exceed 4 feet per second.

3. The inlet shroud shall have a diameter of no less than 5 inches. Inlet shrouds that are less than 5 inches in diameter will not be accepted due to their inability to maintain the specified 4 feet per second maximum inlet velocity which by design prevents unnecessary jamming of the cutter mechanism and minimizes blinding of the pump by large objects that block the inlet shroud.

4. The impeller mechanism must rotate at a nominal speed of no greater than 1800 rpm.

5. The grinder shall be capable of reducing all components in normal domestic sewage, including a reasonable amount of “foreign objects,” such as paper, wood, plastic, glass, wipes rubber and the like, to finely-divided particles which will pass freely through the passages of the pump and the 1-1/4" diameter stainless steel discharge piping.

2.04 ELECTRIC MOTOR

A. As a maximum, the motor shall be a 1 HP, 1725 RPM, 240 Volt 60 Hertz, single phase, capacitor start, ball bearing, air-cooled induction type with Class F installation, low starting current not to exceed 30 amperes and high starting torque of 8.4 foot pounds. The electric service wire shall be sized according to the electric motor requirements. The motor shall be press-fit into the casting for better heat transfer and longer winding life. Inherent protection against running overloads or locked rotor conditions for the pump motor shall be provided by the use of an automatic-reset, integral thermal overload protector incorporated into the motor. This motor protector combination shall have been specifically investigated and listed by Underwriters Laboratories, Inc., for the application. Non-capacitor start motors or permanent split capacitor motors will not be accepted because of their reduced starting torque and consequent diminished grinding capability. The wet portion of the motor armature must be 300 Series stainless. To reduce the potential of environmental concerns, the expense of handling and disposing of oil, and the associated maintenance costs, oil-filled motors will not be accepted.

2.05 MECHANICAL SEAL

A. The pump/core shall be provided with a mechanical shaft seal to prevent leakage between the motor and pump. The seal shall have a stationary ceramic seat and carbon rotating surface with faces precision lapped and held in position by a stainless steel spring.

2.06 TANK AND INTEGRAL ACCESSWAY

A. The tank shall be a wetwell/drywell design custom molded of fiberglass reinforced polyester resin with a high density polyethylene accessway. Accessway corrugated sections are to be made of a double wall construction with the internal wall being generally smooth to promote scouring. The corrugations of the outside wall are to be minimum amplitude of 1-1/2" to provide necessary transverse stiffness. Any incidental sections of a single wall construction are to be 0.250” thick (minimum). All polyethylene seams created during tank construction are to be thermally welded and factory tested for leak tightness. The tank wall and bottom must withstand the pressure exerted by saturated soil loading at maximum burial depth. All station components must function normally when exposed to 150 percent of the maximum external soil and hydrostatic pressure**.**

The tank shall be furnished with two (2) EPDM grommet fittings to accept a 4.5” OD HDPE pipe. The grommets shall be located according to the contract drawings.

The station shall have all necessary penetrations molded in and factory sealed. To ensure a leak free installation no field penetrations will be acceptable.

The drywell accessway shall be an integral extension of the wetwell assembly and shall include a lockable cover assembly providing low profile mounting and watertight capability. The cover shall be high density polyethylene, green in color, with a load rating of 150 lbs per square foot. The accessway design and construction shall enable field adjustment of the station height in increments of 4" or less without the use of any adhesives or sealants requiring cure time before installation can be completed.

The accessway shall include a single NEMA 6P Electrical Quick Disconnect (EQD) for all power and control functions, factory installed with accessway penetrations warranted by the manufacturer to be watertight. The EQD will be supplied with an adequate length of Electrical Supply Cable (ESC) outside the station, to connect to the alarm panel. The ESC shall be installed in the basin by the manufacturer. Field assembly of the ESC into the basin is not acceptable because of potential workmanship issues. The EQD shall require no tools for connecting, seal against water before the electrical connection is made, and include radial seals to assure a watertight seal regardless of tightening torque. Plug-type connections of the power cable onto the pump housing will not be acceptable due to the potential for leaks and electrical shorts. A junction box shall not be permitted in the accessway due to the large number of potential leak points. The EQD shall be so designed to be conducive to field wiring as required. The accessway shall also include an integral 2-inch vent to prevent sewage gases from accumulating in the tank.

2.07 CHECK VALVE

A. The pump discharge shall be equipped with a factory installed, gravity operated, flapper-type integral check valve built into the stainless steel discharge piping. The check valve will provide a full-ported passageway when open, and shall introduce a friction loss of less than 6 inches of water at maximum rated flow. Moving parts will be made of a 300 Series stainless steel and fabric reinforced synthetic elastomer to ensure corrosion resistance, dimensional stability, and fatigue strength. A nonmetallic hinge shall be an integral part of the flapper assembly providing a maximum degree of freedom to assure seating even at a very low back-pressure. The valve body shall be an injection molded part made of an engineered thermoplastic resin. The valve shall be rated for continuous operating pressure of 235 psi. Ball-type check valves are unacceptable due to their limited sealing capacity in slurry applications.

2.08 ANTI-SIPHON VALVE

A. The pump discharge shall be equipped with a factory-installed, gravity-operated, flapper-type integral anti-siphon valve built into the stainless steel discharge piping. Moving parts will be made of 300 Series stainless steel and fabric-reinforced synthetic elastomer to ensure corrosion resistance, dimensional stability, and fatigue strength. A nonmetallic hinge shall be an

integral part of the flapper assembly, providing a maximum degree of freedom to ensure proper operation even at a very low pressure. The valve body shall be injection-molded from an engineered thermoplastic resin. Holes or ports in the discharge piping are not acceptable anti-siphon devices due to their tendency to clog from the solids in the slurry being pumped. The anti-siphon port diameter shall be no less than 60% of the inside diameter of the pump discharge piping.

2.09 CORE UNIT

A. The grinder pump station shall have a cartridge type, easily removable core assembly consisting of pump, motor, grinder, all motor controls, check valve, anti-siphon valve, level controls, electrical quick disconnect and wiring. The core unit shall be installed in the basin by the manufacturer. Field assembly of the pump and controls into the basin is not acceptable because of potential workmanship issues and increased installation time. The core unit shall seal to the tank deck with a stainless steel latch assembly. The latch assembly must be actuated utilizing a single quick release mechanism requiring no more than a half turn of a wrench. The watertight integrity of each core unit shall be established by a 100 percent factory test at a minimum of 5 PSIG.

2.10 CONTROLS

A. All necessary motor starting controls shall be located in the cast iron enclosure of the core unit secured by stainless steel fasteners. Locating the motor starting controls in a plastic enclosure is not acceptable. The wastewater level sensing controls shall be housed in a separate enclosure from motor starting controls. The level sensor housing must be sealed via a radial type seal; solvents or glues are not acceptable. The level sensing control housing must be integrally attached to pump assembly so that it may be removed from the station with the pump and in such a way as to minimize the potential for the accumulation of grease and debris accumulation, etc. The level sensing housing must be a high-impact thermoplastic copolymer over-molded with a thermo plastic elastomer. The use of PVC for the level sensing housing is not acceptable.

Non-fouling wastewater level controls for controlling pump operation shall be accomplished by monitoring the pressure changes in an integral air column connected to a pressure switch. The air column shall be integrally molded from a thermoplastic elastomer suitable for use in wastewater and with impact resistance. The air column shall have only a single connection between the water level being monitored and the pressure switch. Any connections are to be sealed radially with redundant O-rings. The level detection device shall have no moving parts in direct contact with the wastewater and shall be integral to the pump core assembly in a single, readily-exchanged unit. Depressing the push to run button must operate the pump even with the level sensor housing removed from the pump.

All fasteners throughout the assembly shall be 300 Series stainless steel. High-level sensing will be accomplished in the manner detailed above by a separate air column sensor and pressure switch of the same type. Closure of the high-level sensing device will energize an alarm circuit as well as a redundant pump-on circuit. For increased reliability, pump ON/OFF and high-level alarm functions shall not be controlled by the same switch. Float switches of any kind, including float trees, will not be accepted due to the periodic need to maintain (rinsing, cleaning) such devices and their tendency to malfunction because of incorrect wiring, tangling, grease buildup, and mechanical cord fatigue. To assure reliable operation of the pressure switches, each core shall be equipped with a factory installed equalizer diaphragm that compensates for any atmospheric pressure or temperature changes. Tube or piping runs outside of the station tank or into tank-mounted junction boxes providing pressure switch equalization will not be permitted due to their susceptibility to condensation, kinking, pinching, and insect infestation. The grinder pump will be furnished with a 6 conductor 14 gauge, type SJOW cable, pre-wired and watertight to meet UL requirements with a FACTORY INSTALLED NEMA 6P EQD half attached to it.

The Sentry Protect Plus duplex panel shall contain a ground fault receptacle located inside the control panel.

2.11 ALARM PANEL

A. Each grinder pump station shall include an E/One Sentry Duplex Protect Plus Package NEMA 4X, UL-listed alarm panel suitable for wall or pole mounting. The NEMA 4X enclosure shall be manufactured of thermoplastic polyester to ensure corrosion resistance. The enclosure shall include a hinged, lockable cover with padlock, preventing access to electrical components, and creating a secured safety front to allow access only to authorized personnel. The enclosure shall not exceed 10.5" W x 14" H x 7" D, or 12.5" W x 16" H x 7.5" D if certain options are included.

The alarm panel shall contain one 15-amp, double-pole circuit breaker for the pump core's power circuit and one 15-amp, single-pole circuit breaker for the alarm circuit. The panel shall contain a push-to-run feature, an internal run indicator, and a complete alarm circuit. All circuit boards in the alarm panel are to be protected with a conformal coating on both sides and the AC power circuit shall include an auto resetting fuse.

The alarm panel shall include the following features: terminal blocks and ground lugs; external audible and visual alarm; push-to-run switch; push-to-silence switch; redundant pump start; run-time/hour meter, cycle counter; ground fault receptacle; a trouble indicator that shuts down the pumps temporarily in the event of an unacceptable operating condition; predictive status display module; pre-alarm indication for major operating parameters; LCD display with a user friendly interface; inner cover dead front; contact

group with dry contacts and remote sentry contacts; programmable user settings; run dry protection; and high level alarm capability. The alarm sequence is to be as follows when the pump and alarm breakers are on:

1. When liquid level in the sewage wet-well rises above the alarm level, the contacts on the alarm pressure switch activate, audible and visual alarms are activated, and the redundant pump starting system is energized.

2. The audible alarm may be silenced by means of the externally mounted, push-to-silence button.

3. Visual alarm remains illuminated until the sewage level in the wet-well drops below the "off" setting of the alarm pressure switch.

   The visual alarm lamp shall be inside a red, oblong lens at least 3.75" L x 2.38" W x 1.5" H. Visual alarm shall be mounted to the top of the enclosure in such a manner as to maintain NEMA 4X rating. The audible alarm shall be externally mounted on the bottom of the enclosure, capable of 93 dB @ 2 feet. The audible alarm shall be capable of being deactivated by depressing a push-type switch that is encapsulated in a weatherproof silicone boot and mounted on the bottom of the enclosure (push-to-silence button).

2.12 GENERATOR RECEPTACLE

A. The alarm panel shall include a 20 amp, 250 VAC generator receptacle with a spring-loaded, gasketed cover suitably mounted to provide access for connection of an external generator while maintaining a NEMA 4X rating. An automatic transfer switch will **not be required** with the generator receptacle.

2.13 RUN-TIME/HOUR METER

A. A run-time or hour meter to display the total run-time or operation time for the pump core shall be provided.

2.14 RUN DRY PROTECTION

A. A 20-minute lockout cycle will prevent the motor from operating and will illuminate an LED when the wastewater level in the tank is below the pump inlet level. The condition is rechecked every 20 minutes. If the lockout cycle has been initiated and the condition is satisfied, the pump is not allowed to cycle normally but the LED remains latched. The LED will remain latched until the pump breaker is turned off and then on again (reset). If the condition is not satisfied after 3 consecutive attempts, the visual alarm will be activated until the pump breaker is turned off and on (reset) or until there is one cycle of normal operation. If a high level condition is presented at any time, a pump run cycle will be activated.

2.15 SERVICEABILITY

A. The grinder pump core, including level sensor assembly, shall have two lifting hooks complete with lift-out harness connected to its top housing to facilitate easy core removal when necessary. The level sensor assembly must be easily removed from the pump assembly for service or replacement. All mechanical and electrical connections must provide easy disconnect capability for core unit removal and installation. Each EQD half must include a water-tight cover to protect the internal electrical pins while the EQD is unplugged. A pump push-to-run feature will be provided for field trouble shooting. The push-to-run feature must operate the pump even if the level sensor assembly has been removed from the pump assembly. All motor control components shall be mounted on a readily replaceable bracket for ease of field service.

2.16 OSHA CONFINED SPACE

A. All maintenance tasks for the grinder pump station must be possible without entry into the grinder pump station (as per **OSHA 1910.146**, permit-required confined spaces). *"Entry means the action by which a person passes through an opening into a permit-required confined space. Entry includes ensuing work activities in that space and is considered to have occurred as soon as any part of the entrant's body breaks the plane of an opening into the space."*

2.17 SAFETY

A. The grinder pump shall be free from electrical and fire hazards as required in a residential environment. As evidence of compliance with this requirement, the completely assembled and wired grinder pump station shall be listed by Underwriters Laboratories, Inc. to be safe and appropriate for the intended use. UL listing of components of the station, or third-party testing to UL standard are not acceptable.

The grinder pump shall meet accepted standards for plumbing equipment for use in or near residences, shall be free from noise, odor, or health hazards, and shall have been tested by an independent laboratory to certify its capability to perform as specified in either individual or low pressure sewer system applications. As evidence of compliance with this requirement, the grinder pump shall bear the seal of NSF International. Third-party testing to NSF standard is not acceptable.

PART 3 - EXECUTION

3.01 DUPLEX GRINDER PUMP STATION

A. EXCAVATION AND BACKFILL

1. Perform excavation and backfill meeting the applicable requirements of Section 31 23 33; TRENCHING AND BACKFILLING.

B. RESPONSIBILITY FOR MATERIAL

1. Be responsible for all material furnished. Replace all material found defective in manufacture or damaged in handling after delivery. This includes furnishing all material and labor required for the replacement of installed material discovered defective before final acceptance of the work or during the guarantee period. Be responsible for the safe storage of material intended for the work until it has been incorporated in the completed project.

C. FACTORY TEST

1. Each grinder pump shall be submerged and operated for 1.5 minutes (minimum). Included in this procedure will be the testing of all ancillary components such as, the anti-siphon valve, check valve, discharge assembly and each unit's dedicated level controls and motor controls. All factory tests shall incorporate each of the above listed items. Actual appurtenances and controls which will be installed in the field shall be particular to the tested pump only. A common set of appurtenances and controls for all pumps is not acceptable. Certified test results shall be available upon request showing the operation of each grinder pump at two different points on its curve. Additional validation tests include: integral level control performance, continuity to ground and acoustic tests of the rotating components.

2. The ENGINEER reserves the right to inspect such testing procedures with representatives of the OWNER, at the grinder pump manufacturer's facility.

D. DELIVERY

1. All grinder pump units will be delivered to the job site 100 percent completely assembled, including testing, ready for installation. Field installation of the pump in tanks under 96 inches is not allowed. Field installation of the level sensor into the tank is not allowed. Grinder pump stations will be individually mounted on wooden pallets.

E. INSTALLATION

1. E/ONE Extreme Series DH272/DR272 Typical Installation Instructions & Warranty Information shall but utilized while installing the Duplex Grinder Pump Station. The CONTRACTOR will provide all equipment and materials as needed to install the pump station, complete.

2. The CONTRACTOR shall be responsible for handling ground water to provide a firm, dry subgrade for the structure, and shall guard against flotation or other damage resulting from general water or flooding.

3. The grinder pump stations shall not be set into the excavation until the installation procedures and excavation have been approved by the ENGINEER.

4. Remove packing material. User instructions MUST be given to the OWNER. Hardware supplied with the unit, if required, will be used at installation. The basin will be supplied with a two (2) 4" inlet grommets (4.50" OD) for connecting the incoming sewer lines. Appropriate inlet piping must be used. The basin may not be dropped, rolled or laid on its side for any reason.

5. Installation shall be accomplished so that 1 inch to 4 inches of accessway, below the bottom of the lid, extends above the finished grade line. The finished grade shall slope away from the unit. The diameter of the excavated hole must be large enough to allow for the concrete anchor.

6. A 10" inch (minimum) layer of naturally rounded aggregate, clean and free flowing, with particle size of not less than 1/8" or more than 3/4" shall be used as bedding material under each unit.

7. A concrete anti-flotation collar, as detailed on the drawings, and sized according to the manufacturer's instructions, shall be required and shall be pre-cast to the duplex grinder pump station AT the FACTORY. Each grinder pump station with its pre-cast anti-flotation collar shall have a minimum of three lifting eyes for loading and unloading purposes. Anti-flotation calculations shall be provided by the CONTRACTOR/VENDOR indicating that buoyancy requirements have been met with anti-flotation collar.

8. E/One requires that an E/One Uni-Lateral assembly (E/One part number NB0184PXX or NC0193GXX) or E/One Redundant Check Valve (E/One part number PC0051GXX) be installed in the pipe lateral outside the home between the pump discharge and the street main on all installations.

9. The electrical enclosure shall be furnished, installed and wired to the grinder pump station by the CONTRACTOR. An alarm device is required on every installation, there shall be NO EXCEPTIONS. The alarm panel shall be located with the controller on the side of the Director's house where indicated on the contract drawings.

10. The CONTRACTOR shall mount the alarm device in a conspicuous location, as per national and local codes (see drawings). The alarm panel will be connected to the grinder pump station by a length of 6-conductor type TC cable as shown on the contract drawings. The power and alarm circuits must be on separate power circuits. The grinder pump stations will be provided with an estimated 67 feet, 60 feet of useable, electrical supply cable to connect the station to the alarm panel (**length to be verified by Contractor**). This cable will be provided by the pump station manufacturer. This cable shall be supplied with a FACTORY INSTALLED EQD half to connect to the mating EQD half on the core.

F. BACKFILL REQUIREMENTS

1. Proper backfill is essential to the long-term reliability of any underground structure. Several methods of backfill are available to produce favorable

results with different native soil conditions. For this project, Class 1B material shall be used for backfill to surround the unit as defined in ASTM 2321. Backfill material characteristics shall be verified and approved by Engineer before installation.

2. Backfill materials shall be thoroughly compacted in lifts not exceeding 12" to a final Proctor Density of not less than 85-90 percent. Improper backfilling may result in damaged access ways. The grinder pump station shall be installed at a minimum depth from grade to the top of the 1 1/4" discharge line, to assure maximum frost protection. The finish grade line shall be 1" to 4" below the bottom of the lid, and final grade shall slope away from the grinder pump station. Six inches of topsoil shall be placed on top of backfill to allow establishment of grass around the access cover.

3.02 START-UP AND FIELD TESTING

A. Make all tests after backfill is completed, but before any surface restoration or street surfacing. Be responsible for finding and repairing all breaks and leaks revealed by the tests. Additionally, perform all tests in the presence of the Engineer, resident inspector, or the Owner's other designated representative.

B. The manufacturer shall provide the services of qualified factory trained technician(s) who shall inspect the placement and wiring of each station, perform field tests as specified herein, and instruct the OWNER'S personnel in the operation and maintenance of the equipment before the stations are accepted by the OWNER.

C. The services of a trained factory-authorized technician shall be provided for, on site, for one 8.0 hour work day to assist with system startup. After startup, the factory authorized technician shall be available for consultation at no expense to Owner for at least the one year warranty period.

D. All equipment and materials necessary to perform testing shall be the responsibility of the CONTRACTOR**.** This includes, as a minimum, a portable generator and power cable (if temporary power is required), water in each basin (filled to a depth sufficient to verify the high level alarm is operating), and opening of all valves in the system. These steps shall be completed prior to the qualified factory trained technician(s) arrival on site. All costs associated with testing shall be covered by the CONTRACTOR.

E. The startup test will also be utilized to verify that the connection of the lift station to the forcemain is correct and not leaking.

F. Upon completion of the installation, the authorized factory technician(s) will perform the following test on each station:

1. Make certain the discharge shut-off valve in the station is fully open.

2. Turn ON the alarm power circuit and verify the alarm is functioning properly. Pump output will be verified.

3. Turn ON the pump power circuit. Initiate the pump operation to verify automatic “on/off” controls are operative. The pump should immediately turn ON.

4. Consult the Manufacturer’s Service Manual for detailed start-up procedures.

5. Upon completion of the start-up and testing, the manufacturer shall submit to the ENGINEER the start-up authorization form describing the results of the tests performed for each grinder pump station. Final acceptance of the system will not occur until authorization forms have been received for each pump station installed and any installation deficiencies corrected.

G. MATERIALS AND EQUIPMENT FOR TESTING

1. Furnish all labor, equipment and materials (including water) necessary for performing the tests at Contractor expense.

3.03 WATER AND SEWER MAIN SEPARATION

A. Assure horizontal and vertical separation between water mains and sewer mains meeting the details on Standard Drawing No.02713-2.

PART 4 - OPERATION AND MAINTENANCE

4.01 MANUALS: The manufacturer shall supply four copies of Operation and Maintenance Manuals to the OWNER, and one copy of the same to the ENGINEER.

END OF SECTION 33 32 16

DIVISION 40

PROCESS INTERCONNECTIONS

SECTION 40 05 64
DAMPERS FOR CORROSIVE GAS SERVICE

PART 1 - GENERAL

1.01 SUMMARY

A. Flanged frame, steel isolation dampers suitable for application in HVAC (or process) systems.

1.02 REFERENCES

A. Section 40 05 57 – Actuators for Process Valves & Dampers:

1. Actuators and Operators

B. AMCA 500 – D – Laboratory Methods for Testing Dampers for Ratings

C. IECC – International Energy Conservation Code.

1.03 SUBMITTALS

A. Comply with requirements of Section 01330 – Submittal Procedures

B. Product Data: Submit manufacturer's product data.

1. Include leakage, velocity, pressure drop and maximum pressure data.
2. Indicate materials, construction, and dimensions.
3. Include pressure drop data for all damper sizes in accordance with AMCA 500-D test figure 5.3 (Ducted Inlet, Ducted Outlet).
4. Include a copy of Installation Instructions.

1.04 QUALITY ASSURANCE

A. Dampers shall be manufactured under an ISO-9001 Quality Control Program.

B. Dampers shall be manufactured by a reputable company who is a member of the Air Movement Control Association (AMCA).

1.05 DELIVERY, STORAGE, AND HANDLING

A. Delivery: Deliver Materials to site in manufacturer's original, unopened containers and packaging, with labels, clearly indicating manufacturer and material.

B. Storage: Store materials in a dry area indoor, protected from damage, and in accordance with the manufacturer's instructions.

C. Handling: Handle and life dampers in accordance with manufacturer's instructions. Protect material and finishes during handling and installation to prevent damage.

PART 2 - PRODUCTS

2.01 MANUFACTURER

A. All corrosive gas dampers shall be the Model HCDR-351 as manufactured by Greenheck (P.O. Box 410, Schofield, Wisconsin 54476-0410. Phone (715) 359-6171. Website

www.greenheck.com) or approved equal.

B. Ruskin: Model CDRI92

2.02 FOUL AIR (FA) SYSTEM DAMPERS

A. Heavy Duty, Circular Dampers:

1. All of the dampers (manual and motor-operated) in the FA system shall be as follows:

   a. Leakage: With seals – Dampers shall have a maximum leakage of 1.55 cfm total @ 10 in. WC.

   b. Differential Pressure: Dampers shall have a maximum differential pressure rating of 20 in wg.

   c. Velocity: Dampers shall have a maximum velocity rating of 7000 fpm.

2. Construction:

   a. Frame: Damper frame shall be channel with smooth interior surface. Fabricate using Type 304 stainless steel.

      i. Dampers shall be as specified and as scheduled in Supplements.

      ii. Provide flanges with mounting bolt holes for secure installation.

      iii. Fabricate from two gauges heavier than duct in which installed.

      iv. Minimum material gauge and dimensions shall be as follows:

Diameter (D)	Frame and Flange	Web
4″ to 12″	12	6
12" to 24"	10	8
24" to 32"	3/16	8
32" to 42"	3/16	8
42" to 48"	¼	8
48" to 60"	¼	8

3. Blades: Circular, minimum of 3/16 inch thick. Material shall match frame as specified above.

   a. Blade orientation is horizontal and mounted to axle within formed flanged frame.

   b. Blade stiffeners are required.

   c. Blade Stops shall be SS Pin stops

4. Bearings: Grease Lubricated ball bearings mounted outboard of frame with adjustable packing gland shaft seals.

5. Seals: Blade seals shall be field-adjustable and replaceable.
    a. Mechanically attach balde seals to balde with full circumference retainer ring.
    b. Blade Seal material shall be Neoprene blade seals, rated for 250 degrees F.
6. Axles: Minimum diameters shall be as follows:

Diameters (D)	Axle Diameter
4" to 12"	½
12" to 24"	¾
24" to 32"	¾
32" to 42"	1
42" to 48"	1
48" to 60"	1-1/2

7. Control Shaft: Axle extends minimum 6 inches beyond frame for actuator mounting.
8. Finish: Coating and materials to match ductwork requirements.

2.03 ACCESSORIES

A. Actuators:
    1. Type – Electric
        a. Industrial Grade
        b. Electric, 24V or 120V or 230V – AC or DC
        c. Power Open/Power Close (PO/PC) or Spring Return (fail open).
        d. 2-position or Modulating – (modulating signal needs to be specified if modulating operation is required – this is typically 4-20mA or 2-10VDC)
        e. NEMA Rating if needed.
        f. Auxiliary Limit Switches where indicated on project drawings
    2. Type – Manual
        a. Operator force not to exceed 40 pounds under any operating condition, including initial breakaway. Gear reduction operator when force exceeds 40 pounds.
        b. Operator self-locking type or equipped with self-locking device.
        c. Position indicator on quarter-turn valves.
    3. Manual multi-position locking quadrant handle with no larger than 5 degree increments or continuous slot quadrant.
B. Mounting holes: Mounting holes per manufacturer’s configuration

C. Accessories Hardware:

1. Flexible Duct Clamps: Stainless steel band with cadmium-plated hex screw to tighten band with worm-gear action.
2. Adhesives: High strength, quick setting, neoprene based, waterproof and resistant to gasoline, and grease.

2.04 SOURCE QUALITY CONTROL

A. Factory Tests: Factory cycle damper and actuator assemblies to assure proper operation prior to shipment.

PART 3 - EXECUTION

3.01 EXAMINATION

A. Examine areas to receive dampers.

1. Notify the engineer of conditions that would adversely affect installation of subsequent utilization of dampers.
2. Do not proceed with installation until unsatisfactory conditions are corrected.

3.02 INSTALLATION

A. Install dampers in accordance with manufacturer's Installation Instructions.

B. Dampers must be accessible to allow inspection, adjustment, and replacement of components.

1. The sheet metal contractor shall furnish any access doors in ductwork or plenums required to provide this access.
2. The general contractor shall furnish any access doors required in walls, ceilings, or other general building construction.

C. Install dampers square and free from racking. Confirm that damper blades and hardware operate freely without obstruction.

D. Damper blades and hardware that bind within frame or obstructed by adjacent construction will not be acceptable.

E. Do not compress or stretch the damper frame into the duct or opening.

F. Handle dampers using the frame or sleeve.

1. Do not lift or move dampers using blades, actuator or jackshaft.

G. Install connections to (electric, pneumatic) actuators as specified in section 230913.

END OF SECTION 40 05 64

SECTION 40 27 00
PROCESS PIPING - GENERAL

PART 1 - GENERAL

1.01 SUMMARY

A. Section includes furnishing and installation of the following, as indicated, in accordance with the provision of the Contract Documents:

1. Pipe, fittings, wall pipes, and connections associated with interior Work.

B. Related section include:

1. Section 01 10 00 – Summary of Work
2. Section 01 33 00 – Submittal Procedures
3. Section 01 40 00 – Quality Control
4. Section 01 60 00 – Product Requirements
5. Section 09 90 02 – High Performance Painting and Coating
6. Section 40 27 05 – Process Piping Support Systems
7. Section 40 27 10 – Process Piping Specialties
8. Section 40 27 20 - Process Valves
9. Section 40 42 13 – Process Piping Insulation
10. Section 40 71 13 – Magnetic Flow Meter

1.02 REFERENCES

A. Reference Standards include:

1. American National Standards Institute (ANSI)
2. American Society of Mechanical Engineers (ASME)
3. American Society for Testing Materials (ASTM)
4. American Water Works Association (AWWA)
5. American Welding Society (AWS)
6. National Sanitation Foundation (NSF)
7. ANSI/AWWA C104/A21.4: Cement-Mortar Lining for Gray-Iron and Ductile-Iron Pipe and Fittings for water.
8. ANSI/AWWA C105/A21.5: Polyethylene Encasement for Gray and Ductile Cast-Iron Piping for water and other liquids.
9. ANSI/AWWA C110/A21.10: Ductile-Iron and Gray-Iron Fittings, 3 In. Through 48 In. (76 mm through 1,219 mm), for Water.

10. ANSI/AWWA C111/A21.11 Rubber-Gasket Joints for Ductile-Iron Pressure Pipe and Fittings.
11. ANSI/AWWA C115/A21.15: Flanged Ductile-Iron Pipe with Ductile-Iron or Gray-Iron Threaded Flanges.
12. ANSI/AWWA C150/A21.50: Thickness Design of Ductile-Iron Pipe.
13. ANSI/AWWA C151/A21.51: Ductile-Iron Pipe, Centrifugally Cast In Metal Molds or Sand Lined Molds for water or other liquids.
14. ASME B16.18: Cast Copper Alloy Solder Joint Pressure Fittings.
15. ASME B16.22: Wrought Copper and Copper Alloy Solder-Joint Pressure Fittings.
16. ASME B16.26: Cast Copper Alloy Fittings for Flared Copper Tubes.
17. ASTM B 88: Seamless Copper Water Tube.
18. ASTM D-1784: Rigid Poly(Vinyl Chloride) Compounds and Chlorinated
19. Poly(Vinyl Chloride) Compounds.
20. ASTM D-1785: Poly(Vinyl Chloride) (PVC) Plastic Pipe, schedules 40, 80, 120.
21. ASTM D-2464: Threaded Poly(Vinyl Chloride) (PVC) Plastic Pipe Fittings, Schedule 80.
22. ASTM D-2467: Socket Type Poly(Vinyl Chloride) (PVC) Plastic Pipe Fittings, Schedule 80.
23. ASTM D-2564: Solvent Cements for Poly(Vinyl Chloride) (PVC) Plastic Pipe and Fittings.
24. ASTM D-2855: Making Solvent-Cemented Joints with Poly(Vinyl Chloride) (PVC) Pipe and Fittings.
25. AWWA C600: Installation of Ductile-Iron Water Mains and Their Appurtenances.
26. AWWA C606: Grooved and shouldered type joints.
27. AWWA C651: Standard for Disinfecting Water Mains.
28. AWWA C653: Disinfection of Water Treatment Plants.
29. AWWA C900 - Polyvinyl Chloride (PVC) Pressure Pipe, 4 In. through 12 In., for Water.
30. AWWA C905 - Polyvinyl Chloride (PVC) Pressure Pipe and Fabricated Fittings, 14 In. through 48 In., for Water Transmission and Distribution.
31. NSF Standards No. 60 and 61 – National Sanitation Foundation.

1.03 QUALITY ASSURANCE

A. Welding Materials and Procedures: Conform to ANSI/AWS D.1.1.

B. Employ certified welders.

C. Piping modifications subject to Engineer's review. No additional compensation allowed for modifications required to suit equipment furnished by Contractor.

D. Anchorage and bracing calculations as required by Section 01 88 15, Anchorage and Bracing.

1.04 SUBMITTALS

A. Submit Shop Drawings in accordance with Section 01 33 00 – Submittal Procedures for all pipe and fittings indicating: Name of Manufacturer, Materials, Standard Dimensions, References, and Joint Data.

B. Submit Affidavit of Compliance for ductile iron pipe and fittings.

C. Submit design calculations for structural design of pipe thickness where pipe class or thickness is not specifically called out.

D. Submit detailed piping layout drawings showing piping and connections to equipment and appurtenances.

E. Submit torque patterns and requirements for flanged piping assemblies.

F. Submit anchorage and bracing drawings and cut sheets as required in accordance with Section 01 88 15, Anchorage and Bracing.

1.05 COATING AND IDENTIFICATION SYSTEMS

A. All material and equipment in this section shall be factory primed. Primer shall be compatible with finish coats of paint provided under Section 09 90 02 – High Performance Painting and Coating.

B. The Contractor shall refinish and restore to the original appearance all equipment that has sustained damage to the manufacturer's finish or prime coats of paint or enamel.

C. Finish painting of all materials and equipment in this Section shall be the responsibility of the Contractor, and shall be as described Section 09 90 02 – High Performance Painting and Coating, unless otherwise specifically indicated.

D. All *interior* ductile iron pipe (DIP) shall be either:

1. Installed with no asphaltic varnish coating (only red primer) and coated in accordance with System 2 of Section 09 90 02 of these specifications;

2. Installed with asphaltic varnish coating (properly cleaned) and coated in accordance with 09 90 02 D.1.f of these specifications.

1.06 REGULATORY REQUIREMENTS

A. All Products that may come into contact with water intended for use in a Public Water System shall meet ANSI/NSF International Standards 60 and 61, as appropriate. A Product will be considered as meeting these standards if so certified by NSF, the Underwriters Laboratories, or other organization accredited by ANSI to test and certify each Product.

PART 2 - PRODUCTS

2.01 PIPE SCHEDULE

A. Process Piping:

1. Ductile Iron.
2. Stainless Steel.
3. PVC.

B. Other Piping:

1. CPVC.
2. HDPE.
3. Copper
4. Steel Pipe.
5. PE Jacketed, PE Insulated Stainless Steel Pipe
6. As otherwise shown on Drawings or specified in other Sections.

2.02 DUCTILE IRON PIPE AND FITTINGS

A. Approved Manufacturers:

1. American Cast Iron Pipe Company.
2. U.S. Pipe.
3. Or approved equivalent.

B. General

1. Minimum Pressure Class (Pounds per Square Inch – PSI):
   a. Interior and exterior exposed, flanged:
      i. 12-inch diameter and smaller: 350 PSI.
      ii. 14-inch diameter and larger: 250 PSI.
2. Onsite inspection of all materials by Contractor.
3. Pipe coating:
   a. Buried and submerged: bituminous coating (asphalt coating).
   b. Interior and exposed: prime coat.
4. Bolts and nuts:
   a. Buried exposed and submerged: stainless steel.
   b. Interior and exposed: stainless steel.
5. Pipe lining:

a. All pipelines : cement-mortar.

6. Submit design calculation for structural design of pipe thickness where pipe thickness or class is not specifically called out.
7. Pipe and fittings to match face and drill of valves.
8. All flanges shall be full-faced flanges.
9. All materials to be new and unused.
10. Pipe and fitting material: ductile iron.

C. Pipe: ANSI/AWWA C150/A21.50 and ANSI/AWWA C151/A21.51.

D. Flanged Pipe: ANSI/AWWA C115/A21.15.

1. Minimum Class: Class 53.

E. Fittings:

1. Flanged fittings:

a. Conform to ANSI/AWWA C110/A21.10.

b. Full face gaskets, bolts, and nuts: AWWA C110, Appendix A.

c. Material: ductile iron.

2. Reducers: all reducers shall be concentric pattern unless noted otherwise on the Project Drawings.

F. Based Fittings:

1. Conform to ANSI/AWWA-C110/A21.10.
2. All side-based and flange-based fittings must be fully faced and drilled.

G. Coatings and Linings:

1. Asphaltic: ANSI/AWWA C110/A21.10 and ANSI/AWWA C151/A21.51.
2. Cement lining: ANSI/AWWA C104/A21.4.
3. Prime coat: per Section 09 90 02 – Mechanical Painting and Coating.

H. Joints - Pipe and Fittings:

1. Flanged: ANSI/AWWA C110/A21.10 and ANSI/AWWA C115/A21.15.
2. Provide type of joint as indicated on Project Drawings.
3. Use of grooved and shouldered joints is acceptable where approved by Engineer.

a. Conform to AWWA C606.

4. The Engineer will only accept Uni-Flanges or approved equivalent at locations that receive prior approval.

I. Wall sleeves: wall sleeve shall be provided where any process pipe passes through concrete walls and no thrust restraint is required. Wall sleeves shall be utilized unless a

wall pipe is used. Wall sleeves shall be Schedule 40 PVC or galvanized carbon steel as specified on the project drawings. Wall sleeves shall be as manufactured by Metraflex or approved equal.

J. Wall Pipe and Wall Collar: All wall pipes and collars shall be Class 53 ductile iron with the collar continuously welded around the entire circumference and shall be rated a minimum of 250 psi. All wall pipes and collars shall be fabricated such that they are suitable in all thrust restraint applications where there is a concrete penetration. Wall pipes and collars shall be as manufactured by U.S. Pipe or approved equal.

K. Sleeve Seals: All pipes passing through wall sleeves unrestrained where indicated on the Drawings will be provided with a sleeve seal similar to the Model C Link-Seal® Modular Seal or pre-approved equal.

2.03 PVC PIPE AND FITTINGS *for biofilter condensate collection/conveyance*

A. PVC pipe and fittings furnished shall be of the type as specified below for each particular use or type of installation.

B. Pressure Piping (4-inches diameter through 12-inches diameter)

1. PVC pressure pipe in sizes 4 – 12 inches in diameter shall conform to all applicable requirements of ANSI/AWWA C900 or C909 as applicable or indicated in the drawings. Pipe utilized for potable water shall be NSF certified for use in the transport of potable water.

2. The pipe and fittings shall meet cast iron pipe equivalent outside diameters and shall be minimum Class 150 (DR18) or Class 200 (DR14) pipe as indicated on the drawings, and shall meet the requirements of Table 2 of AWWA C900 or C909 as applicable.

3. Flanges for connecting plain end PVC pipe to equipment shall be Uni- flange series 900, ROMAC, or equal.

4. Pipe, fittings, and valves shall be installed in compliance with manufacturer's recommendations.

C. Pressure Piping (less than 4-inches in diameter) and Non Pressure Piping

1. Schedule 80, unless specified otherwise, conforming to ASTM D-1785.

2. Materials: ASTM D-1784, Type 1, Grade 1.

3. Pipe Coating:

a. Buried and submerged: None

b. Exposed and Interior: Painted as Specified in Section 09 90 02 – Mechanical Painting and Coating.

4. Fittings: ASTM D-2467, socket type; or ASTM D-2467, flange type; or ASTM D-2464, threaded type; as required or as indicated on Drawings.

5. Solvent Cement: ASTM D-2564, Primer (ASTM F656) and PVC Solvent Cement.

6. Polyvinyl chloride fittings shall be limited to a 3-inch diameter or less.

2.04 CPVC PIPE AND FITTINGS

A. Pipe, fittings, and valves shall be manufactured from a CPVC compound which meets the requirements of class 23447-B, Type 4, Grade 1 in accordance with ASTM D1784. Compound from which the pipe is produced shall have a design stress rating of 2,000 psi at 23 degrees C, listed by the Plastic Pipe Institute (PPI).

B. Fittings and valves shall meet the requirements of ASTM F439 (schedule 80 socket) or ASTM F437 (schedule 80 threaded).

C. All socket type connections shall be joined with CPVC solvent cement conforming to the requirements of ASTM F493.

D. All CPVC shall be Schedule 80.

E. Approved Manufacturers:

1. Georg Fischer.
2. Hayward.
3. Asahi/America.
4. Spear.

2.05 HIGH DENSITY POLYETHYLENE (HDPE) PIPE *for buried and cast-in aeration and foul air conveyance piping*

A. All high density polyethylene pipe shall be DR 17, unless specified otherwise, conforming to ANSI D-2239.

B. All HDPE pipe to have standard ductile iron pipe size (DIPS) dimensions.

C. All pipe shall be homogenous throughout and shall be free of visible cracks, holes, foreign material, blisters, or other deleterious faults. The physical appearance of the pipe having deformities such as concentrated ridges, discoloration, excessive spot roughness, pitting, varying wall thickness, etc., shall constitute sufficient basis for rejection.

1. PE electrofusion fittings may be substituted for butt welded fittings at no additional cost to Owner. Fitting and piping shall be heat fused in accordance with ASTM D2657. Butt fusion fittings shall conform to ASTM D3261.

D. HDPE/PVC Sch. 35 Transition Coupling *(if utilized)*

1. Transition fitting shall be constructed of PVC, 3M Scotchkote fusion-bonded 6233 epoxy coated A53 carbon steel and HDPE 3408 pipe – AWWA C213 & C550 and ASTM D3350 compliant;
2. PVC and HDPE pipe shall be joined together by hydraulically pressing the HDPE into the coupling with a compression ring supporting the connection, and the PVC shall be pressed into the coupling – providing a smooth flow between both pipe insertions;

3. Use ASTM D-2564 compliant solvent cement for PVC insertion;
4. Approved manufacturer; Poly-Cam Series 731 Transition Coupling

2.06 COPPER TUBE AND FITTINGS *(if specified)*

A. Copper pipe to be used for pipe sizes less than 4-inch diameter

B. Dielectric unions shall be used between copper water tube and dissimilar metal piping.

C. Hard Copper Tube: ASTM B88, Types L and M (ASTM B88M, Types B and C), water tube, drawn temper. Type K for underground services.

1. Copper Pressure Fittings: ASME B16.18, cast-copper alloy or ASME B16.22, wrought-copper, solder joint fittings.
2. Bronze Flanges: ASME B16.24, Class 300, with solder joint end.
3. Copper Unions: MSS SP-123, cast-copper alloy, hexagonal stock body, with ball and socket, metal to metal seating surfaces and solder joint or threaded ends.
4. Copper, Grooved End Fittings: ASTM B75 (ASTM B75M) copper tube or ASTM B584 bronze castings.
   a. Copper Tubing, Keyed Couplings: Copper tube dimensions and design similar to AWWA C606. Included ferrous housing sections, gasket suitable for hot water, and bolts and nuts.
5. Aboveground Water Piping: Use the following piping materials for each size range:
   a. NPS 1-1/2 (DN 40) and Smaller: Hard copper tube, Type L (Type B); and soldered joints.
   b. NPS 2 (DN 50): Hard copper tube, Type L (Type B); and soldered joints.
   c. NPS 2-1/2 to NPS 3-1/2 (DN 65 to DN 90): Hard copper tube, Type L (Type B); and soldered joints.
6. Drawings indicate valve types to be used. Where specific valve types are not indicated, the following requirements apply:
   a. Shutoff Duty: Use bronze ball or gate valves for piping NPS 2 (DN50) and smaller. Use cast-iron butterfly or gate valves with flanged ends for piping NPS 2-1/2 (DN 65) and larger.
7. Soldered Joints: Use ASTM B 813, water-fusible, lead-free flux; ASTM B 32, lead-free-alloy solder; and ASTM B 828 procedure, unless otherwise indicated.

2.07 STEEL PIPE AND FITTINGS *(if specified)*

A. Steel Pipe, NPS 2” (DN 50) and Smaller: ASTM A 53, Type S (seamless) or Type F (furnace-butt welded), Grade A, Schedule 80, galvanized steel, threaded ends per ASME/ANSI B1.20.1.

B. Steel Pipe, NPS 2-1/2” through NPS 12” (DN 65 through DN 300): ASTM A 53, Type E (electric-resistance welded), Grade A, Schedule 40, black steel, plain ends. Cast-Iron Pipe

Flanges and Flanged Fittings: ASME B16.1, Classes 25, 125, and 250; raised ground face, and bolt holes spot faced.

C. Steel Pipe, NPS Greater than 12": ERW standard wall, thickness of 0.375 inch, continuous spiral welded conforming to ASTM A-53 standards.

1. On-Site inspection by Contractor of all materials.
2. Pipe Coating:
   a. Epoxy Lining: NSF International Standards 60 and 61.
   b. Exposed: Shop Prime Coated and finish coat as specified in Section 09 90 02 – Mechanical Painting and Coating.
3. Flanges: ASME B16.5, Class 150-lb. slip on flanges, double welded.
4. Bolts and Nuts: Stainless steel.
5. Pipe and fittings to match face and drill of valves.
6. All materials to be new and unused.
7. Mechanical couplings: Dresser Style 38 or approved equal.
8. Unions: Fed Spec. WW-U-531, Class 2, Type A (black) for ungalvanized pipe.
9. Threaded fittings: ASME B16.4, Class 125.

D. Wrought-Steel Fittings: ASTM A 234/A 234M, wall thickness to match adjoining pipe.

E. Grooved Mechanical-Joint Fittings: ASTM A 536, Grade 65-45-12 ductile iron; ASTM A 47 (ASTM A 47M), Grade 32510 malleable iron; ASTM A 53, Type F, E, or S, Grade B fabricated steel; or ASTM A 106, Grade B steel fittings with grooves or shoulders designed to accept grooved end couplings.

F. Grooved Mechanical-Joint Couplings: Ductile- or malleable-iron housing and synthetic rubber gasket of central cavity pressure-responsive design; with nuts, bolts, locking pin, locking toggle, or lugs to secure grooved pipe and fittings.

G. Flexible Connectors: Stainless-steel bellows with woven, flexible, bronze, wire-reinforcing protective jacket; 150-psig (1035-kPa) minimum working pressure and 250 deg F (121 deg C) maximum operating temperature. Connectors shall have flanged or threaded-end connections to match equipment connected and shall be capable of 3/4-inch (20-mm) misalignment.

H. Spherical, Rubber, Flexible Connectors: Fiber-reinforced rubber body with steel flanges drilled to align with Classes 150 and 300 steel flanges; operating temperatures up to 250 deg F (121 deg C) and pressures up to 150 psig (1035 kPa).

I. Welding Materials: Comply with Section II, Part C, of the ASME Boiler and Pressure Vessel Code for welding materials appropriate for wall thickness and for chemical analysis of pipe being welded.

J. Gasket Material: Thickness, material, and type suitable for fluid to be handled; and

design temperatures and pressures.

2.08 POLYETHYLENE-JACKETED, POLYETHYLENE INSULATED STAINLESS STEEL PIPE *(if specified)*

A. The service pipe shall be Schedule 10, ASTM A-312 304L Stainless Steel. All joints shall be butt-welded for 2 1/2" and larger, and socket or butt-welded for 2" and smaller. Where possible, straight sections shall be supplied in 40-foot random lengths with piping exposed at each end for field joint fabrication.

B. The service pipe insulation shall be polyurethane foam with 2.0 Lbs./Ft.2 minimum density, 90% minimum closed cell content and initial thermal conductivity of 0.16 Btu in./Hr. ft^2 °F. The insulation shall completely fill the annular space between the service pipe and jacket and shall be bonded to both. Systems using open cell insulation or a non-bonded design shall not be allowed.

1. The insulation shall be a minimum of 1-inch thick for all pipe less than 4" in diameter

C. The outer protective insulation jacket shall be seamless high-density polyethylene (HDPE) in accordance with ASTM D1248, type 3, Class C. PVC or tape materials are not allowed. Minimum jacket thickness shall be 0.125-inch.

D. All fittings shall be factory prefabricated and pre-insulated. Straight tangent lengths shall be added to all ends so that all field joints are at straight sections of pipe. Elbow jackets shall be molded HDPE. Tee jackets shall be extrusion welded or butt fusion welded HDPE. Gluing, taping or hot air welding shall not be allowed.

E. Field Joints: The service pipe shall be hydrostatically tested to 150 psig or 1 1/2 times the design pressures whichever is greater. Insulation shall then be poured in place into the field joint area. All field-applied insulation shall be placed only in straight sections of pipe. Field insulation of fittings is not acceptable. The installer shall seal the field joint area with a heat shrinkable adhesive backed sleeve. Backfilling shall not begin until the heat shrink sleeve has cooled. All insulation and jacketing materials for the field joint shall be furnished by the insulated pipe system manufacturer.

2.09 PIPE CORROSION PROTECTION

A. Coatings: See Section 09 90 02 – High Performance Painting and Coating, for details of coating requirements.

B. Heat Shrink Wrap:

C. Type: Cross-linked polyolefin wrap or sleeve with mastic sealant.

D. Manufacturer and Product: Raychem; WPC or TPS, or equal.

2.10 FLANGE INSULATING GASKET KITS

A. Approved Manufacturer:

1. Advance Products & Systems.

2. Approved Equivalent.

B. Size: per diameter of flange.

C. Pressure rating: meet minimum pressure rating of attached piping.

D. Provide to meet either full-faced or raised faced portion of flange.

1. Full-Faced Gasket

a. Type E gaskets.

b. Precision cut bolt holes.

c. Material: plain face or Neoprene face phenolic.

2. Raised Face Portion

a. Type F gaskets.

b. Inside diameter of the bolt hole circle should be slightly smaller than the outside diameter of the gasket, assuring an exact, automatic positioning of the gasket.

c. Material: plain face or Neoprene face phenolic.

E. Provide insulating sleeve and washer with the single insulation sets.

1. Material: high density polyethylene (HDPE), phenolic, and Mylar.

2. Provide with each set a 1/8” thick S.A.E. electro-plated steel washer.

2.11 COUPLINGS, TAPS, AND MISCELLANEOUS JOINTS

A. Tapping saddles and tapping sleeves shall be Mueller, or equal.

B. Provide pipe repair clamps where indicated on the Drawings. Pipe repair clamps shall be suitable for potable water service with all type 304 stainless steel bolts and hardware. Contractor shall verify pipe outside diameter and necessary length before placing clamp. Pipe repair clamps shall be Mueller Series 510 XTRA-RANGE Full Seal type, or equal.

PART 3 - EXECUTION

3.01 PREPARATION

A. Make necessary field measurements to determine pipe laying lengths; fabricate pipe; deliver pipe to site; store pipe with ends capped to prevent contamination and damage to interior; prepare pipe for installation; work pipe into place without forcing or springing.

B. Do not store or ship small diameter pipe inside larger diameter pipe.

C. Ream pipe and tube ends. Remove burrs. Repair lining at pipe cuts.

D. Remove scale and dirt, inside and outside, before assembly.

E. Remove welding slag or foreign material from pipe and fitting materials.

F. Remove temporary preservative coatings from valves, fittings, and appurtenances prior to installation.

G. Clean, repair, or replace equipment malfunctioning due to presence of foreign material

left in piping during installation or entering piping after installation due to Contractor's work at no cost to Owner.

3.02 DUCTILE IRON PIPE AND FITTINGS

A. Joints:

1. Interior submerged: flanged.

2. Interior exposed: flanged, grooved and shouldered if approved by Engineer, except where indicated otherwise on the Project Drawings.

B. Flanged Joints:

1. Pipe shall extend completely through screwed-on flanges. The pipe end and flange face shall be finish machined in a single operation. Flange faces shall be flat and perpendicular to the pipe centerline.

2. Care shall be taken to avoid restraint on the opposite end of the pipe or fitting which would prevent uniform gasket compression or would cause unnecessary stress in the flanges when bolting flanged joints.

3. One flange shall be free to move in any direction while the flange bolts are being tightened. Bolts shall be gradually tightened and at a uniform rate, to ensure uniform compression of the gasket.

4. Special care shall be taken when connecting piping to pumping equipment to ensure that piping stresses are not transmitted to the pump flanges. All connecting piping shall be permanently supported so that accurate matching of bolt holes and uniform contact over the entire surface of the flanges is obtained before any bolts are installed in the flanges.

C. Penetrations:

1. Install pipe straight through concrete walls or floors.

2. Provide wall sleeves where ductile iron pipe passes through concrete walls and floors, unless specified otherwise on Project Drawings.

3. Install wall pipes or sleeves as shown on Project Drawings.

4. Install embedded wall flange in center of wall or floor and grout in place when embedded wall pipe flange shown on Project Drawings.

5. Fabricate wall pipes to dimensions required.

D. Support pipe at fittings with rods; anchor and support in accordance with Section 40 27 15 – Process Piping Support Systems

E. Pipe and fittings to match face and drill of valves and appurtenances.

3.03 THREADED JOINTS

A. Pipe threads shall conform to ANSI/ASME B1.20.1, NPT, and shall be fully and cleanly cut with sharp dies. Not more than three threads at each pipe connection shall remain

exposed after installation. Ends of pipe shall be reamed after threading and before assembly to remove all burrs.

B. Threaded joints in plastic piping shall be made with Teflon thread tape applied to all male threads. At the option of the Contractor, threaded joints in other piping may be made up with Teflon thread tape, thread sealer, or a suitable joint compound. Thread tape and joint compound or sealers shall not be used in threaded joints that are to be seal welded.

3.04 COMPRESSION JOINTS

A. Ends of tubing shall be cut square and all burrs shall be removed. The tubing end shall be fully inserted into the compression fitting and the nut shall be tightened not less than 1-1/4 turns and not more than 1-1/2 turns past fingertight, or as recommended by the fitting manufacturer, to produce a leaktight, torque- free connection.

3.05 SOLVENT WELDED JOINTS

A. All joint preparation, cutting, and jointing procedures shall comply with the pipe manufacturer's recommendations and ASTM D2855. Pipe ends shall be beveled or chambered to the dimensions recommended by the manufacturer. Newly assembled joints shall be suitably blocked or restrained to prevent movement during the setting time recommended by the manufacturer. Pressure testing of solvent welded piping systems shall not be performed until the applicable curing time, as set forth in Table X2.1 of ASTM D2855, has elapsed.

3.06 PVC PIPE

A. Form solvent joints in PVC pipe and fittings to ANSI/ASTM D2855. Solvent joints are to be used only where threaded or flanged connections are inappropriate.

B. 2-inch and larger: make connections to equipment and supply lines with flanges, unless otherwise specified.

C. Under 2-inches: make connections to equipment and supply lines with solvent joints, unless otherwise specified.

3.07 DISSIMILAR PIPE CONNECTIONS

A. Provide non-conducting connections or flange insulating gasket kits wherever jointing dissimilar metals in open systems.

3.08 VENTS AND DRAINS

A. Vents and drains at high and low points in piping required for completed system may or may not be shown. Install vents on high points and drains on low points of pipelines as shown.

3.09 INSULATION

A. See Section 40 42 13 - Process Piping Insulation.

3.10 TESTING

A. Hydrostatically test each entire line in accordance with AWWA C600-99.

3.11 DISINFECTION

A. Disinfect all potable water lines in accordance with Section 33 13 00 – Disinfection of Water Systems.

3.12 FIELD PREPARATION AND PAINTING

A. All material and equipment in this section shall be factory primed, excluding PVC and copper, and field finish coated. Factory coatings shall be compatible with materials provided under Section 09 90 02 – High Performance Painting and Coating.

3.13 LEAKAGE

A. See Section 40 42 80 - Process Piping Leakage Testing.

B. All joints shall be watertight and free from leaks. All leaks shall be repaired by Contractor in a timely manner and at no expense to the Owner.

C. All pipe, fittings, valves, pipe joints, and other materials which are found to be defective shall be removed and replaced with new and acceptable materials, and the affected portion of the piping retested by and at the expense of the Contractor.

END OF SECTION 40 27 00

SECTION 40 05 07
PROCESS PIPING HANGERS & SUPPORTS

PART 1 - GENERAL

1.01 SUMMARY

A. Section includes:

1. Pipe and equipment hangers, supports, and associated anchors.
2. Sleeves and seals.

B. Related Sections include:

1. Section 01 33 00 – Submittal Procedures
2. Section 05 50 00 – Metal Fabrications.
3. Section 09 90 02 – High Performance Painting and Coating.
4. Section 40 27 00 – Process Piping - General.
5. Section 40 27 10 – Process Piping Specialties

1.02 REFERENCES

A. Reference Standards include:

1. ANSI B 31.10: Pipe Supports;
2. ASTM A36: Structural Steel;
3. ASTM A123/A123M, Standard Specification for Zinc (Hot-Dip Galvanized) Coatings on Iron and Steel Products;
4. ASTM A325: High Strength Bolts for Structural Steel Joints;
5. ASTM A653/653M, Standard Specification for Steel Sheet, Zinc-Coated (Galvanized) or Zinc-Iron Alloy-Coated (Galvanealed) by the Hot-Dip Process;
6. Manufacturers' Standardization Society (MSS) Pipe Hangers and Supports SP-58; SP-69 & SP-89

1.03 SUBMITTALS

A. Submit shop drawings and product data under provisions of Section 01 33 00. Indicate name of manufacturer, materials, standard dimensions, references, maximum loadings, and thrust restraints for all pipe support systems.

B. Provide a list of materials and corresponding suppliers.

C. Provide pipe support location and details with piping layout drawings for piping systems for all exposed pipes.

D. Identify revisions of piping system and anchorage and bracing layouts or additions of flexible joints.

E. Submit Affidavit of Compliance certifying that materials furnished have been tested and are in compliance with specification requirements.

F. Qualifications and experience record of the registered design professionals who will analyze the piping systems and who stamp and sign final drawings for pipe supports

designated to be designed by the Contractor.

G. Calculations for piping systems showing load reactions on pipe supports. Clearly identify gravity loads, thrust loads, transient loads, and thermal movements. Calculations shall include a summary of design assumptions and a summary of load reactions at each pipe support and shall be stamped and signed by the Contractor's Registered Design Professional .

H. Design calculations for pipe support components shall be based on the applied loads obtained from the piping system analysis, as well code required load cases including those noted below. Calculations shall include a summary of design criteria used, design of each type of support, and a summary of resulting load reactions on the supporting structure.

1.04 QUALITY ASSURANCE

A. Welding Materials and Procedures: Conform to ANSI/AWS D.1.1.

B. Employ certified welders as necessary to complete Work.

C. Pipe Support Systems shall be designed to accommodate:

1. Gravity loads imposed by weight of pipes and their contents while in full operation;
2. Seismic loads in accordance with governing codes;
3. Wind loads in accordance with governing codes;
4. Thermal expansion and contractor of pipe materials.

1.05 FIELD MEASUREMENTS

A. The Drawings indicate required pipe sizes and the general arrangement for major piping. Locations shall be verified in the field by the Contractor. Valves, fittings, and appurtenances shall be of such dimensions to allow for the installation of this piping and supports substantially as shown on the Drawings. In the event it should become necessary to change the location of any of the work due to interference with other work, Contractor shall consult with the Engineer prior to making any changes and all such changes shall be made at no additional cost to the Owner.

B. Contractor to provide piping support systems throughout the facility to provide a complete system, whether specific supports are shown on not. Contractor shall select and design all support systems within the spans and component requirements outlined in Section 3.03 below.

C. Prior to roughing in any facilities or installation of piping and equipment, consult all related drawings including general, mechanical, electrical, etc., and inform self of materials, locations of structures, pipes, ducts, electrical conduits, etc., which may impact the installation of supports.

D. Discrepancies discovered before or after work has started, shall be brought to the attention of the Engineer immediately, and the Engineer reserves the right to require minor changes in the work to eliminate such discrepancies.

PART 2 - PRODUCTS

2.01 PIPE HANGER SUPPORTS

A. In certain locations, pipe supports, anchors and expansion joints have been indicated on the Drawings, but no attempt has been made to indicate every restraint, anchor, and expansion joint. It shall be the Contractor's responsibility to provide a complete system of pipe supports, to provide expansion joints, and to anchor all piping in accordance with the requirements set forth herein. Additional pipe supports may be required adjacent to expansion joints, couplings, or valves.

B. Concrete and fabricated steel supports shall be as indicated on the Drawings, as specified in other Sections, or, in the absence of such requirements, as permitted by the Engineer.

C. All piping shall be rigidly supported and anchored so that there is no movement or visible sagging between supports.

D. Materials

1. Unless otherwise specified, all pipe supports shall comply with ANSI/MSS SP-58 and MSS SP-69. Materials of construction for fabricated steel supports are covered in the structural and miscellaneous metals section. All pipe support materials shall be packaged as necessary to ensure delivery in satisfactory condition.
2. Unless otherwise specified or indicated on the Drawings, pipe supports shall be fabricated of manufacturer's standard materials and provided with galvanized finish or be fabricated of stainless steel.
3. Design loads for inserts, brackets, clamps, and other support items shall not exceed the manufacturer's recommended loads.
4. Pipe supports shall be manufactured for the sizes and types of pipe to which they are applied. Strap hangers will not be acceptable. Threaded rods shall have sufficient threading to permit the maximum adjustment available in the support item.
5. Unless otherwise acceptable to the Engineer, the use of supports that rely on stressed thermoplastic components to support the pipe will not be acceptable.
6. Contact between dissimilar metals, including contact between stainless steel and carbon steel, shall be prevented. Supports for brass or copper pipe or tubing shall be copper plated. Portions of pipe supports which come into contact with other metals that are dissimilar shall be rubber or vinyl coated.
7. Concrete inserts or L-shaped anchor bolts shall be used to support piping from new cast-in-place concrete. Expansion anchors shall be used to fasten supports to existing concrete and masonry.
8. Anchorage shall be provided to resist thrust due to temperature changes, changes in diameter or direction, or dead-ending. Anchors shall be located as required to force expansion and contraction movement to occur at expansion joints, loops, or elbows, and as required to prevent excessive bending stresses and opening of mechanical couplings. Anchorage for temperature changes shall be centered between elbows and mechanical joints used as expansion joints.

E. Manufacturer and Type:

1. Anvil International, Catalog PH-5.14, or approved equivalent.

    a. Adjustable Hinged Split-Ring: Figure 104;

b. Light welded steel bracket: Figure 194.
c. Medium welded steel bracket: Figure 195
d. Heavy welded steel bracket: Figure 199
e. Concrete Inserts: Figure 281.
f. Offset Pipe Clamp: Figure 103.
g. Adjustable Clevis Hanger: Figures 260 & 260 ISS.
h. Stainless Steel Hanger Rods.

F. Attachments:

1. I-Beam Clamp: Concentric loading type, MSS SP-58 & MSS SP-69 Type 21, 28, 89 or 30 which engage both sides of flange;
2. Concrete insert: MSS SP-58 & MSS SP-69, Type 18 continuous channe insert with load rating not less than that of hanger rod it supports;
3. Welded Beam Attachment: MSS SP-58 & MSS SP-69, Type 22,
   a. Anvil - Figure 66;
   b. B-Line - Figure B3083

2.02 FLOOR PIPE SUPPORTS

A. Pedestal Type: Schedule 40 pipe stanchion, saddle and anchoring flange

1. Non-adjustable Saddle: MSS SP-58 and MSS SP-69, Type 37 with U-bolt:
   a. Anvil - Figure 259, Sizes 4" through 36";
   b. B-Line - Figure B3090, sizes 2½" through 36";
2. Adjustable Saddle: MSS SP-58 and MSS SP-69, Type 38 without clamp;
   a. Anvil International - adjustable pipe saddle support: Figures 264 (& 265 w/ U-bolt) sizes 2½" through 36";
   b. B-Line - Figure B3093, sizes 2½" through 36";
   c. Or Approved Equivalent.
3. Minimum vertical adjustment: 4½ inch.
4. Provide complete with riser pipe and flange bolts for floor mounting.
5. Provide precast concrete or grout base a minimum of 1” above floor.
6. Provide as per recommended spacing, at minimum. Contractor shall install a minimum of one floor pipe support per pump discharge piping prior to the header piping.
7. Contractor may also be required to construct concrete saddle pipe supports for floor piping as indicated on the Drawings. Contractor to provide all materials, formwork, and labor to construct as detailed on Drawings.

2.03 WALL & CHANNEL TYPE SUPPORTS

A. Steel brackets shall conform to MSS Type 31 for light duty, MSS Type 32 for heavy duty, and MSS Type 33 for heavy duty. Brackets shall be sized accordingly for full size and weight of piping system. All mounting hardware shall be stainless steel.

1. Anvil - Figure 199, 3,000 lb rating;
2. B-Line - Figure B3067, 3,000 lb rating

B. Channel Type:

1. Unistrut;
2. Anvil – Power-Strut;
3. B-Line – Strut System
4. Aickinstrut (FRP);

C. Submerged piping shall be supported with Type 316 stainless steel hangers or steel bracket supports coated with two coats of bitumastic paint.

2.04 PIPE CLAMPS

A. Riser Clamp – MSS SP-58 and MSS SP-69, Type 8

1. Anvil – Figure 261, sizes ¾" through 24";
2. B-Line – Figure B3373, sizes ½" through 30";

2.05 VERTICAL PIPE SUPPORTS

A. Two bolt riser clamps shall be MSS SP 69 Type 8 galvanized or plastic coated.

B. Four bolt riser clamps shall be MSS SP 69 Type 42 galvanized or plastic coated.

2.06 SADDLES AND SHIELDS

A. Protection saddles shall be MSS SP 69 Type 39.

B. Protection shields shall be MSS SP 69 Type 40.

C. Wood insulation saddle shall be Elcen Metal Products Company, or equal.

2.07 INTERMEDIATE PIPE GUIDES

A. Piping 6" and smaller:

1. Type: Pipe clamp with oversized pipe sleeve to provide minimum ⅛" clearance;
2. Manufacturers and products:
   a. Anvil – Figure 103;
   b. B-Line – B3148 or B3180

B. Piping 8" and larger:

1. Type: Specially formed U-bolts with double nuts to provide ¼" minimum clearance;
2. U-Bolt stock size:
   a. 8" pipe: ⅝";
   b. 10" pipe: ¾";
   c. 12" through 16" pipe: ⅞";
   d. 18" through 30" pipe: 1";

2.08 PIPE ALIGNMENT GUIDES

A. Type:

1. 8" and smaller – spider or sleeve type
2. 10" and larger – roller type

B. Manufacturers:

1. Flexonics;

2. Anvil;
3. B-Line

2.09 PREFABRICATED OR FABRICATED PIPE SUPPORTS

A. Pre-engineered support systems constructed of steel products factory fabricated by firms regularly engaged in the manufacture of these items shall be used for this work. Steel pipe support systems shall be blasted to a white clean condition after fabrication and hot-dip galvanized in accordance with ASTM 123, unless support is specified to be fabricated of stainless steel.

B. Free-standing pipe connections to equipment shall be firmly attached to fabricated steel frames made of angles, channels, or I-beams. Frames shall be anchored to the structure.

C. Exterior, free-standing overhead piping shall be supported by fabricated pipe stands, made of pipe columns anchored to concrete footings, with horizontal, welded steel angles and U-bolts or clamps securing the pipes.

D. Special pipe supports for vertical and horizontal movement shall be as detailed on the drawings. Supports shall be fabricated by firms regularly engaged in the manufacture of these items.

2.10 SLEEVES AND SEALS

A. Wall pipes shall connect piping to concrete structure. Wall pipes shall be ductile iron meeting the requirements of AWWA C115. Provide wall pipes where indicated on Drawings.

B. Wall sleeves shall be ductile iron meeting the requirements of AWWA C151. Sleeves shall have cast waterstop collar. Cast waterstop collar shall have an outside diameter a minimum of four inches greater than the outside diameter of the wall sleeve.

C. Approved Manufacturers:

1. Sleeves for pipes through walls and floors:
   a. Ductile Iron Water-Stop wall pipe.
   b. Or Approved Equivalent.

2. Bolted rubber annular seal:
   a. Link Seal manufactured by Garlock Corp.
   b. Or Approved Equivalent.

2.11 ANCHORS

A. Hollow Concrete Block and Brick Anchors:

1. Acceptable Manufacturer and Type:

   a. HIT S 12/A Combi Fastener manufactured by Hilti Corporation.
   b. Approved Equivalent.

2. Accessories: HY20 Adhesive with screen tube insert.

B. Use Type 316 stainless steel epoxy adhesive anchor bolts, Hilti 150 injection adhesive anchors, or equal, for building or structure attachments. Provide continuous concrete

inserts, Unistrut P3200 series, or equal, where applicable.

C. Mechanical anchor and powder-actuated drive-pin fasteners shall be used only with prior approval from the ENGINEER.

2.12 FABRICATION

A. Size sleeves large enough to allow for installation of annular seal.

B. Design hangers to support piping without disconnection of pipe.

2.13 FINISH

A. Factory coat steel hangers and supports as specified in Section 09 90 02 – Mechanical Painting and Coating.

B. Touch up finish on exposed steel hangers and supports in accordance with Section 09 90 02 – Mechanical Painting and Coating.

PART 3 - EXECUTION

3.01 INSTALLATION

A. Contractor shall verify location of piping and piping systems as shown on the Drawings;

B. Install support systems in accordance with MSS SP-69 and MSS SP-89 unless shown otherwise;

C. Install supports and hangers plumb within 4° of vertical (during shut-down or operation);

D. Support large or heavy valves, dampers, fittings and appurtenances independently of connected piping;

E. Do not support pipe from any pipes above it;

F. Pipes shall be attached to structural members when possible. When necessary to frame structural members between existing members, such members shall be provided by the Contractor at no additional cost to OWNER. Structural members shall be in accordance with the building code and the guidelines of the AISC.

G. Install hangers, supports, clamps, and attachments as required to properly support piping in all operating conditions, including thrust, water hammer and surge conditions. Supports shall allow for free expansion and contraction of the piping, and shall prevent stress on equipment. Hangers shall have a means of vertical adjustment after installation. Hangers shall be designed so that movement of the supported pipe cannot cause them to disengage. Hanger rods shall be subject to tensile loading, only.

H. No attempt has been made to show all required pipe supports in all locations, either on the Drawings or in the details. The absence of pipe supports on the Drawings shall not relieve the Contractor of the responsibility of providing supports as required.

I. Connections to structural framing shall not induction twisting, torsion, or later bending in the framing members. Provide supplementary steel as required.

J. Adjust support and hanger sizes to account for pipe insulation.

K. Meters, valves, equipment, and other point load items shall be independently supported to prevent pipe stress. Piping shall support no meters, valves, equipment or other point load items.

L. Space supports within maximum piping span length indicated in MSS SP-69, as indicated on the Drawings, or as recommended by the pipe manufacturer, whichever spacing is less. Install additional supports at concentrated loads, including valves, flanges, guides, strainers, and expansion joints, and at changes in direction of piping.

M. Supports, hangers, anchors, and guides shall be designed and provided to prevent excess heat transfer to the structure or equipment, where applicable.

N. Risers shall be supported on each floor with riser clamps and lugs, independent of the connected horizontal piping, when possible.

O. Do not support piping with wire, either temporarily or permanently. Do not support piping from other piping.

P. Piping shall be supported in such a manner that neither the insulation nor the vapor/weather barrier is compromised by the support or the effects of the support.

Q. Embedded pipe supports or inserts shall be in place prior to placement of cast-in- place concrete. Continuous inserts shall be furnished with end caps and cardboard closure strips. Locate and space building attachments so that the total load and the point loads due to the pipe hanger and supports do not exceed the design capacity of the supporting structure.

R. Where it is necessary to anchor supports to hardened concrete or completed masonry use stainless steel adhesive anchors.

S. For precast concrete slabs, drill through concrete slab from below and provide stainless steel through bolts with square steel plates and stainless steel bolts. Plate shall bear directly upon the top surface of the precast concrete slab. All toppings or insulation as required shall be applied after installation of all support plate assemblies.

T. Attach to structural steel with beam clamps.

U. Mechanical anchor and powder-actuated drive-pin fasteners shall be installed in concrete after concrete is placed and completely cured. Install fasteners according to manufacturer's written instructions. Non-adhesive anchors shall be only used with prior approval from the ENGINEER.

V. Piping shall be supported at least one and one-half inch out from the face of walls and at least three inches below ceilings, unless otherwise noted.

W. Pedestal supports shall be used where indicated on the drawings or when piping is installed at or near the floor level, and shall consist of galvanized floor flange, pipe, and saddle. Provide stainless steel anchor bolts. All pedestal supports shall be adjustable, and place up off of the floor with minimum 1-inch grout.

3.02 INSERTS

A. Provide and install inserts for placement in concrete formwork.

B. Provide and install inserts for suspending hangers from reinforced concrete slabs and sides of reinforced concrete beams and walls.

C. Where concrete slabs form finished ceiling, provide inserts to be flush with slab surface.

3.03 PIPE HANGERS AND SUPPORTS

A. Horizontal Suspended Piping:

1. Single pipes: Adjustable swivel-ring, split-ring or clevis hangers;
2. Grouped pipes: Trapeze hanger systems;
3. Furnish galvanized steel protection shield and oversized hangers for insulated pipe;
4. Furnish pre-cut sections of rigid insulation with vapor barrier at hangers for insulated pipe;

B. Horizontal Piping Supported from Walls;

1. Single pipes: wall brackets or wall slips attached to wall with anchors;
2. Stacked pipes: wall mounted framing system and clips acceptable for piping smaller than 3" diameter;
3. Piping clamps that resist axial movement of pipe through support are not acceptable. Use cast iron hanging rolls supported from wall bracket. Furnish galvanized steel protection shield and oversized hangers. Wall mounted piping clips are not acceptable for insulated piping.

C. Horizontal Piping Supported from Floors:

1. Stanchion Type:
   a. Pedestal type; adjustable with stanchion, saddle, and anchoring flange.
   b. Use yoked saddles for piping whose centerline elevation is 18 inches or greater above floor and for exterior installations.
   c. Provide neoprene waffle isolation pad under anchoring flanges, adjacent to equipment or where otherwise required to provide vibration isolation.
2. Floor Mounted Channel Supports:
   a. Use for piping smaller than 3-inch nominal diameter running along floors and in trenches at piping elevations lower than can be accommodated using pedestal pipe supports.
   b. Attach channel framing to floors with anchor bolts.
   c. Attach pipe to channel with clips or pipe clamps.
3. Concrete Cradles: Use for piping larger than 3 inches along floor and in trenches at piping elevations lower than can be accommodated using stanchion type.

D. Vertical Pipe: Support with wall brackets and base elbow or riser clamps on floor penetrations.

E. Standard Attachments:

1. To Concrete Ceilings: Concrete inserts.
2. To Steel Beams: I-beam clamp or welded attachments.
3. To Wooden Beams: Lag screws and angle clips to members not less than 2-1/2 inches thick.
4. To Concrete Walls: Concrete inserts or brackets or clip angles with anchor bolts.

F. Existing Walls and Ceilings: Install as specified for new construction, unless shown otherwise.

3.04 Intermediate and Pipe Alignment Guides:

A. Provide pipe alignment guides (or pipe supports that provide same function) at expansion joints and loops.
B. Guide piping on each side of expansion joint or loop at 4-pipe and 14-pipe diameters from each joint or loop.
C. Install intermediate guides on metal framing support systems not carrying pipe anchor or alignment guide.

3.05 Accessories:

A. Insulation Shield: Install on insulated nonsteel piping. Oversize rollers and supports.

B. Welding Insulation Saddle: Install on insulated steel pipe. Oversize rollers and supports.

C. Vibration Isolation Pad: Install under base flange of pedestal type pipe supports adjacent to equipment, and where required to isolate vibration.

D. Dielectric Barrier:

1. Install between carbon steel members and copper or stainless steel pipe.
2. Install between stainless steel supports and non-stainless steel ferrous metal piping.

E. Electrical Isolation: Install 1/4-inch by 3-inch neoprene rubber wrap between submerged metal pipe and oversized clamps.

3.06 Support horizontal piping as follows:

PIPE SIZE	MAX HANGER/ SUPPORT SPACING	MIN HANGER/SUPPORT ROD DIAMETER
½ to 1-1/4 inch	6'-6"	3/8"
1½ to 2 inch	10'-0"	3/8"
2½ to 3 inch	10'-0"	1/2"
4 to 6 inch	10'-0"	5/8"
8 to 12 inch	10’-0"	7/8"
14 to 18 inch	10'-0"	1"
20 to 30 inch	10'-0"	1-1/2"
30 to 36 inch	10'-0"	1-3/4"
PVC (All Sizes)	5'-0"	1/2"

A. Install supports free standing or suspended to provide minimum ½ inch space between support and adjacent Work.

B. Place a hanger/support within 12 inches of each horizontal fitting and on each side of valves.

C. Use hangers with 1½-inch minimum vertical adjustment.

D. Support riser piping independently of connected horizontal piping.

3.07 THRUST ANCHORS AND GUIDES

A. For suspended piping, center thrust anchors as closely as possible between expansion joints and between elbows and expansion joints. Anchors shall hold pipe securely and shall be sufficiently rigid to force expansion and contraction movement to take place at expansion joints and/or elbows and to preclude separation of joints.

B. Provide thrust anchors as required to resist thrust due to changes in diameter or direction or dead end of pipelines. The design of all anchors shall be subject to approval by ENGINEER. Anchorage shall be required wherever bending stresses exceed allowable for pipe. Wall pipes may be used as thrust anchors.

C. Pipe guides shall be provided adjacent to sliding expansion joints in accordance with the recommendations of the National Association of Expansion Joint Manufacturers.

3.08 INSERTS AND ANCHORS

A. Furnish and install inserts or anchors for placement in concrete.

B. Furnish and install inserts or anchors for suspending hangers from reinforced. concrete slabs and sides of reinforced concrete beams and walls.

C. Utilize support assemblies designed for the appropriate loads. Contractor shall verify design conditions of each piping system.

D. Mechanical anchor and powder-actuated drive-pin fasteners shall be installed in concrete after concrete is placed and completely cured. Install fasteners according to manufacturer's written instructions. Non-adhesive anchors shall be only used with prior approval from the ENGINEER.

3.09 SLEEVES

A. Set sleeves in position in formwork. Provide reinforcing around sleeves.

B. Extend sleeves through floor three inches above finished floor level.

C. Where piping penetrates floor, ceiling, or wall, close off space between pipe and sleeve with link seal.

D. Wall sleeves and wall pipes shall be securely supported by form work to prevent contact with reinforcing steel and tie wires. Sleeves shall be set in formwork prior to pouring concrete.

E. For precast concrete panels openings shall be provided of such size to allow at least three inches clearance around the outside of the sleeve. After installation of sleeve, grout shall be tamped into place making a watertight joint.

3.10 COATING

A. Prime coat non-galvanized steel or non-stainless steel hangers and supports.

B. Finish coat all hangers and supports, except galvanized and stainless steel hangers and supports, under provisions of Section 09 90 02 – Mechanical Painting and Coating.

END OF SECTION 40 05 07

SECTION 40 27 10
PROCESS PIPING SPECIALTIES

PART 1 - GENERAL

1.01 SUMMARY

A. Section Includes:

1. Furnishing and installation of the following, as indicated, in accordance with the provision of the Contract Documents:

a. Couplings.

b. Flanged Coupling Adapters.

c. Quick Connect Couplings

d. Buried Flange Adapters.

e. Mechanical Joint Restraint Gland.

f. Filler Flanges.

g. Rubber Expansion Joints.

h. Flexible PVC Wire Reinforced Hose.

i. Wye Strainers.

j. Filters

k. Basket Strainers

l. Spray Nozzle Eductors

m. Fire Hose

n. Fire Hose Spray Nozzle

o. Rubber Garden Hose

B. Related Sections include:

1. Section 01 10 00 – Summary of Work.

2. Section 09 90 02 – High Performance Painting and Coating.

3. Section 40 27 00 – Process Piping - General.

4. Section 40 27 05 – Process Piping Support Systems.

5. Section 40 27 20 – Process Valves.

1.02 SUBMITTALS

A. Shop Drawings and Product Data: Submit, Under Provisions of Section 01 33 00, on all materials and products specified in this Section.

B. Provide a list of materials and corresponding suppliers.

C. Submit Affidavit of Compliance certifying that materials furnished have been tested and are in compliance with specification requirements.

PART 2 - PRODUCTS

2.01 SPECIALTIES CONNECTIONS

A. Provide pipe specialties suitable to connect to adjoining pipes as specified for pipe fittings. Diameter to match adjacent and adjoining piping.

B. Couplings, connectors, or other pipe specialties used on the compost foul air collection system shall be rated for temperatures of 250 degrees F.

2.02 WORKING PRESSURE

A. Working pressure of pipe specialties to be equal to working pressure of connecting pipes, unless specified otherwise.

2.03 APPROVED MANUFACTURERS

A. Mechanical Couplings

1. Manufacturer and Type:

a. Dresser “Style 38”.

b. Smith-Blair “441 or 411 Flexible Coupling”.

c. Romac “Style 501” Coupling.

d. Or Equal.

B. Quick Connect Couplings

1. Manufacturer and type:

a. OPW, Kamlock.

b. Ryan Herco, 1300 series.

c. Or Equal.

C. Flanged Coupling Adapters

1. Manufacturer and type:

a. MegaFlange Series 2100 by EBAA Iron, Inc.

b. Smith Blair 912

c. Or Equal.

D. Tapping Saddles and Tapping Sleeves

1. Mueller

2. Or Equal.

E. Pipe Repair Clamps

1. Mueller Series 510
2. Or Equal.

F. Rubber Expansion Joints

1. Series 230, Style 231 with limit rods and compression sleeves by Proco Products, Inc.
2. Invincible Style 501 with control rod assembly by Mercer Rubber Co.
3. Or equal

G. Flexible PVC Wire Reinforcement Hose

1. Material: PVC Hose – Heavy Duty.
2. Reinforcement: Coated or Encased Spiral Wire.
3. Strength: Capable of holding 100 pounds without elongation.
4. Finish: Interior shall be smooth.
5. Size: As shown on the drawings.
6. Use: As shown on Drawings.
7. Manufacturer:
    a. Titan Hose.
    b. Or Equal.

H. Wye Strainers, Water Service, 2 inches and Smaller:

1. Type: Bronze body, Y-pattern, 200 psi nonshock rated, with screwed gasketed bronze cap.
2. Screen: Heavy-gauge Type 304 stainless steel or monel, 20-mesh.
3. Manufacturer:
    a. Armstrong International, Inc., Model F.
    b. Mueller Steam Specialty, Model 351M.
    c. Or Equal.

I. Filters

1. Type: Cartridge filter housing and disposable filter cartridges
2. Inlet Liquid Pressure: 50-80 PSI
3. Flow Rate: 20-150 GPM
4. Usage: Effluent reuse filter
5. Cartridge Pore Size: 150 micron
6. Spare parts: provide spare disposable filter cartridges

7. Manufacturer:
    a. Hayward
    b. Dayton
    c. Eaton
    d. Or equal

J. Basket Strainers
1. Type: Basket Strainer
2. Inlet Liquid Pressure: 50-80 PSI
3. Flow Rate: 20-150 GPM
4. Screen: Type 304 stainless steel or monel, 80-mesh.
5. Usage: Effluent reuse strainer
6. Spare Parts: provide 2 baskets for each strainer
7. Manufacturer:
    a. Hayward
    b. Eaton
    c. Or equal

K. Spray Nozzle Eductors, Chlorine Injection
1. Type: Polypropylene
2. Inlet Connection: Pipe thread inlet 1.5 inches
3. Orifice Diameter: 9/16 inches
4. Inlet Liquid Pressure: 40 PSI
5. Inlet Flow Rate: 66 GPM
6. Entrained Flow Rate: 264 ±10% GPM
7. Circulation Rate: 330 ±10% GPM
8. Manufacturer:
    a. Spraying Systems Co.
    b. Or equal

L. Fire Hose
1. Type: Rubber covered lay flat
2. Size: 1.5 inches
3. Length: 50 ft

4. Bowl Size:1-13/16 inches
5. Inlet Liquid Pressure: 80 PSI
6. Quantity: 4
7. Manufacturer:
    a. Fire Hose Direct.
    b. Or equal

M. Fire Hose Spray Nozzle
1. Type: Assault fire hose nozzle with pistol grip
2. Inlet Connection: Pipe thread inlet 1.5 inches
3. Inlet Liquid Pressure: 80 PSI
4. Quantity: 1
5. Manufacturer:
    a. Akron Brass Co.
    b. Or equal

N. Rubber Garden Hose
1. Type: Commercial/Industrial rubber hose
2. Size: 5/8 inches
3. Length: 50 ft
4. Quantity: 1
5. Manufacturer:
    a. Apex Commercial Model 8695-50
    b. Or equal

O. PIPE SLEEVES SEAL
1. Type: Modular Mechanical Seal
2. Size: To continuously fill annular space.
3. According to manufacturer's instructions for size of pipe shown.
4. Watertight seal between pipe and water.
5. Manufacturer:
    a. Thunderline Corp, Link-Seal Division.
    b. Or equal.

P. PIPE PENETRATION SLEEVES

1. Type: Molded Polyethylene Pipe Sleeve
2. Size: As required for penetration.
    a. Provide end caps for support during concrete construction.
3. Manufacturer:
    a. Pipe Shields, Inc.; Models WFB, WFB CS and CW Series, as applicable.
    b. Or equal.

PART 3 - EXECUTION

3.01 INSTALLATION

A. Install in accordance with manufacturer's recommendations.

B. Install equipment in locations shown on the Drawings.

3.02 MECHANICAL COUPLINGS

A. A space of at least ¼-inch, but not more than 1-inch, shall be left between the pipe ends.

B. Pipe and coupling surfaces in contact with gaskets shall be clean and free of dirt and other foreign matter during assembly.

C. All assembly bolts shall be gradually tightened and at a uniform rate, so that the coupling is free from leaks and all parts of the coupling are square and symmetrical with the pipe.

D. The interior surfaces of the middle rings shall be prepared for coating in accordance with the instructions of the coating manufacturer and shall then be coated with liquid epoxy in accordance with ANSI/AWWA C210. The remaining components shall be cleaned and shop primed with universal primer.

E. Repair and damaged areas of shop coatings on the pipe and coupling to the satisfaction of the Engineer.

F. Provide steel tie-bolts, diametrically opposite, which extend across the joint from lugs welded to the pipe on either side of the joint to provide restraint.

3.03 FLANGED COUPLING ADAPTERS

A. After the pipe is in place and bolted tight, the proper locations of holes for anchor studs or lock pins shall be determined and the pipe shall be field-drilled.

B. The inner surfaces of the couplings shall be prepared for coating in accordance with the instructions of the coating manufacturer and shall then be coated with liquid epoxy in accordance with ANSI/AWWA C210. The remaining surfaces, except the flange mating surfaces, shall be cleaned and shop primed with universal primer.

3.04 FILLER FLANGES

A. Ductile iron conforming to the requirements of AWWA C115, maximum 250 psi working pressure.

B. Match filler flange to adjoining pipe working pressure class.

3.05 RUBBER EXPANSION JOINTS

A. Install expansion joints and control rod units per manufacturer's recommendation.

END OF SECTION 40 27 10

SECTION 40 42 80
PROCESS PIPING LEAKAGE TESTING

PART 1 - GENERAL

1.01 SUMMARY

A. Section Includes:

1. Performing of the following, as indicated, in accordance with the provision of the Contract Documents:

a. Leakage testing of process piping.

B. Related Sections include:

1. Section 01 33 00 – Submittals.
2. Section 01 40 00 – Quality Control.
3. Section 01 60 00 – Product Requirements.
4. Section 01 75 00 – Starting and Adjusting.
5. Section 01 77 00 – Closeout Procedures.
6. Section 01 78 23 – Operations and Maintenance Data.
7. Section 40 27 00 – Process Piping - General.
8. Section 40 27 05 – Process Piping Support Systems.
9. Section 40 27 20 – Process Valves.

1.02 SUBMITTALS

A. Informational Submittals:

1. Testing Plan: Submit prior to testing and include at least the information that follows.

a. Testing dates.

b. Piping systems and section(s) to be tested.

c. Test type.

d. Method of isolation.

e. Calculation of maximum allowable leakage for piping section(s) to be tested.

2. Certifications of Calibration: Testing equipment.
3. Certified test report.

1.03 REFERENCES

A. The following is a list of standards which may be referenced in this section:

1. Chlorine Institute (2001 L Street N.W., Washington D.C. 28036): Pamphlet 6, Piping Systems for Dry Chlorine.
2. AWWA C600-99.

PART 2 - PRODUCTS (Not Used)

PART 3 - EXECUTION

3.01 PREPARATION

A. Notify Engineer in writing 5 days in advance of testing. Perform testing in presence of Engineer.

B. Hydrostatically test in accordance with AWWA C600-99.

C. Pressure Piping:

1. Install temporary thrust blocking or other restraint as necessary to protect adjacent piping or equipment and make taps in piping prior to testing.
2. Wait 5 days minimum after concrete thrust blocking is installed to perform pressure tests. If high-early strength cement is used for thrust blocking, wait may be reduced to 2 days.
3. Prior to test, remove or suitably isolate appurtenant instruments or devices that could be damaged by pressure testing.
4. Chemical Piping: Test, dry, and clean in accordance with requirements of Chlorine Institute Pamphlet 6.
5. New Piping Connected to Existing Piping:
   a. Isolate new piping with grooved-end pipe caps, spectacle blinds, blind flanges, or as acceptable to Engineer.
   b. Test joint between new piping and existing piping by methods that do not place entire existing system under test load, as approved by Engineer.
6. Items that do not require testing include: Piping between wetwells and wet well isolation valves, Equipment seal drains, tank overflows to atmospheric vented drains and tank atmospheric vents.
7. Test Pressure: As specified in specifications or as specified by equipment manufacturer.

D. Test section may be filled with water and allowed to stand under low pressure prior to testing.

E. Gravity Piping:

1. Perform testing after service connections, manholes, and backfilling have been completed between stations to be tested.
2. Determine groundwater level at time of testing by exploratory holes or other method

acceptable to Engineer.

3. Pipe 42 Inches Diameter and Larger: Joint testing device may be used to isolate and test individual joints.

3.02 HYDROSTATIC TEST FOR PRESSURE PIPING

A. Fluid: Clean water of such quality to prevent corrosion of materials in piping system.

B. Exposed Piping:

1. Perform testing on installed piping prior to application of insulation.

2. Maximum Filling Velocity: 0.25 foot per second, applied over full area of pipe.

3. Vent piping during filling. Open vents at high points of piping system or loosen flanges, using at least four bolts, or use equipment vents to purge air pockets.

4. Maintain hydrostatic test pressure continuously for 30 minutes, minimum, and for such additional time as necessary to conduct examinations for leakage.

5. Examine joints and connections for leakage.

6. Correct visible leakage and retest as specified.

7. Empty pipe of water prior to final cleaning or disinfection.

3.03 HYDROSTATIC TEST FOR GRAVITY PIPING

A. Testing Equipment Accuracy: Plus or minus 1/2 -gallon water leakage under specified conditions.

B. Maximum Allowable Leakage: 0.16 gallons per hour per inch diameter per 100 feet. Include service connection footage in test section, subjected to minimum head specified.

C. Gravity Sanitary and Roof Drain Piping: Test with 15 feet of water to include highest horizontal vent in filled piping. Where vertical drain and vent systems exceed 15 feet in height, test systems in 15-foot vertical sections as piping is installed.

D. Exfiltration Test:

1. Hydrostatic Head:

a. At least 6 feet above maximum estimated groundwater level in section being tested.

b. No less than 6 feet above inside top of highest section of pipe in test section, including service connections.

2. Length of Pipe Tested: Limit length such that pressure on invert of lower end of section does not exceed 30 feet of water column.

E. Infiltration Test:

1. Groundwater Level: At least 6 feet above inside top of highest section of pipe in test section, including service connections.

F. Piping with groundwater infiltration rate greater than allowable leakage rate for exfiltration will be considered defective even if pipe previously passed a pressure test.

G. Defective Piping Sections: Replace or test and seal individual joints, and retest as specified.

3.04 PNEUMATIC TEST FOR PRESSURE PIPING

A. See Section 23 31 13 for Foul Air ductwork pneumatic pressure testing requirements.

B. Do not perform on:

1. PVC or CPVC pipe.
2. Piping larger than 18 inches.
3. Buried and other non-exposed piping.

C. Fluid: Oil-free, dry air.

D. Procedure:

1. Apply preliminary pneumatic test pressure of 25 psig maximum to piping system prior to final leak testing, to locate visible leaks. Apply soap bubble mixture to joints and connections; examine for leakage.
2. Correct visible leaks and repeat preliminary test until visible leaks are corrected.
3. Gradually increase pressure in system to half of specified test pressure. Thereafter, increase pressure in steps of approximately one-tenth of specified test pressure until required test pressure is reached.
4. Maintain pneumatic test pressure continuously for minimum of
5. 10 minutes and for such additional time as necessary to conduct soap bubble examination for leakage.
6. Correct visible leakage and retest as specified.

E. Allowable Leakage: Piping system, exclusive of possible localized instances at pump or valve packing, shall show no visual evidence of leakage.

F. After testing and final cleaning, purge with nitrogen those lines that will carry flammable gases to assure no explosive mixtures will be present in system during filling process.

3.05 PNEUMATIC TEST FOR GRAVITY PIPING

A. Equipment:

1. Calibrate gauges with standardized test gauge provided by Contractor at start of each testing day. Engineer will witness calibration.
2. Install gauges, air piping manifolds, and valves at ground surface.
3. Provide pressure release device, such as rupture disc or pressure relief valve, to relieve pressure at 6 psi or less.
4. Restrain plugs used to close sewer lines to prevent blowoff.

B. Procedure:

1. Require that no person enter manhole where pipe is under pressure.
2. Slowly introduce air into pipe section until internal air pressure reaches 4 psi greater than average back pressure of groundwater submerging pipe.
3. Allow 2 minutes minimum for air temperature to stabilize.

C. Allowable Leakage: Test section will be considered defective when time required for pressure to decrease from 3.5 to 2.5 psi greater than average back pressure of groundwater submerging pipe is less than that computed utilizing values from following table:

TABLE 1*

A Pipe Diameter (Inches)	B Time per Foot up to Length in Col C (Seconds)	C Test Length (Feet)	D Test Time for any Length Between Col C & E (Min:Sec)	E Length at Which Time in Col F Applies (Feet)	F Time per Foot for Total Length (Seconds)
4	0.18	636	1:54	1,114	0.10
6	0.40	424	2:50	743	0.23
8	0.71	318	3:47	557	0.41
10	1.11	255	4:43	446	0.63
12	1.60	212	5:40	371	0.91
15	2.50	170	7:05	297	1.42
18	3.62	141	8:30	248	2.06
21	4.92	121	9:55	212	2.81
24	6.42	106	11:20	187	3.67

EXAMPLE: 15-inch diameter pipe:
For 150 feet, T = 2.50 sec (Col B) x 150 ft = 375 sec = 6:15 For 250 feet, T = 7:05 (Col D)
For 500 feet, T = 1.42 sec (Col F) x 500 ft = 710 sec = 11:50

*Based on 0.003 cfm per square foot with a minimum significant loss of 2 cfm and a maximum loss of 3.5 cfm.

D. Piping with groundwater infiltration rate greater than allowable leakage rate for exfiltration will be considered defective even if pipe previously passed a pressure test.

E. Defective Piping Sections: Replace or test and seal individual joints, and retest as specified.

3.06 FIELD QUALITY CONTROL

A. Test Report Documentation:

1. Test date.

2. Description and identification of piping tested.
3. Test fluid.
4. Test pressure.
5. Remarks, including:
    a. Leaks (type, location).
    b. Repair/replacement performed to remedy excessive leakage.
6. Signed by Contractor and Owner's Representative to represent that test has been satisfactorily completed.

END OF SECTION 40 42 80

SECTION 40 90 00
INSTRUMENTATION AND CONTROL FOR PROCESS SYSTEMS

PART 1 - GENERAL

1.01 SUMMARY

A. This section gives general requirements for Process Instrumentation and Control (PIC). The following PIC subsections expand on requirements of this section:

1. Section 26 29 23, Variable Frequency Motor Controller.
2. Section 40 91 00, Instrumentation and Control Components.

B. Major Work Items: Includes but is not limited to engineering, furnishing, installing, calibrating, adjusting, testing, documenting, starting up, and training for complete PIC. A single PIC supplier (PICS) shall provide the following unless otherwise noted:

1. Process instrumentation including primary elements, transmitters, control devices, and control panels as shown on the contract drawings and indicated on in the 40 91 00 Supplement 01 – Instrument Index and Suplement 03 – Control Panel Schedule.
2. Programmable Logic Controller (PLC) system complete with an adequately sized Control Panel and UPS.
3. Variable Frequency Drive Cabinets COMP-DRV-100, COMP-DRV-200 and COMP-DRV-300 as specified in section 26 29 23, Variable Frequency Motor Controller.
4. Configuration of communications for control equipment and devices within the Composting Facility including PLCs, VFDs and Ethernet switches.
5. Follow Owner Standards as specified in Article Owner ICS Standards and Site Access.
6. Application Software: The Process Instrumentation and Control System (PICS) supplier is responsible for all control system application software related to this project, except for items listed below to be performed by the Owner. Major work items include:
   a. PICS supplier will provide the PLC programming.
   b. PICS supplier will provide a new HMI software system as part of the Compost package control system.
   c. PICS supplier will provide all VFD configuration to work in conjunction with the PICS for all drives provided by the PICS supplier.
   d. Owner will provide any Modifications to the existing Plant SCADA system.

1.02 REFERENCES

A. The following is a list of standards which may be referenced in this section and other PIC subsections:

1. American National Standards Institute (ANSI).
2. ASTM International (ASTM):
   a. A182/A182M, Standard Specification for Forged or Rolled Alloy and Stainless Steel Pipe Flanges, Forged Fittings, and Valves and Parts for High-Temperature Service.
   b. A276, Standard Specification for Stainless Steel Bars and Shapes.
   c. A312/A312M, Standard Specification for Seamless, Welded, and Heavily Cold Worked Austenitic Stainless Steel Pipes.
   d. B32, Standard Specification for Solder Metal.
   e. B88, Standard Specification for Seamless Copper Water Tube.
3. Deutsche Industrie-Norm (DIN): VDE 0611, Specification for modular terminal blocks for connection of copper conductors up to 1,000V ac and up to 1,200V dc.
4. Institute of Electrical and Electronics Engineers, Inc. (IEEE): C62.41, Recommended Practice on Surge Voltages in Low-Voltage AC Power Circuits.
5. The Instrument, Systems, and Automation Society (ISA):
   a. RP12.06.01, Recommended Practice for Wiring Methods for Hazardous (Classified) Locations Instrumentation Part 1: Intrinsic Safety.
   b. S5.1, Instrumentation Symbols and Identification.
   c. S5.4, Instrument Loop Diagrams.
   d. S50.1, Compatibility of Analog Signals for Electronic Industrial Process Instruments.
   e. TR20.00.01, Specification Forms for Process Measurement and Control Instruments, Part 1: General.
6. International Conference on Energy Conversion and Application (ICECA).
7. National Electrical Code (NEC).
8. National Electrical Manufacturers Association (NEMA):
   a. 250, Enclosures for Electrical Equipment (1,000 Volts Maximum).
   b. ICS 1, Industrial Control and Systems General Requirements.
9. National Fire Protection Association (NFPA): 820, Standard for Fire Protection in Wastewater Treatment and Collection Facilities.
10. NSF International (NSF):

a. NSF/ANSI 61, Drinking Water System Components - Health Effects.

b. NSF/ANSI 372, Drinking Water System Components - Lead Content.

11. Underwriters Laboratory, Inc. (UL): 508A, Standard for Safety, Industrial Control Panels.

1.03 DEFINITIONS

A. Abbreviations:

1. DCU: Distributed Control Unit.
2. FDT: Factory Demonstration Test.
3. HMI: Human-Machine Interface.
4. HVAC: Heating, Ventilating, and Air Conditioning.
5. I&C: Instrumentation and Control.
6. I/O: Input and Output.
7. O&M: Operation and Maintenance.
8. P&ID: Process and Instrument Diagram.
9. PC: Personal Computer.
10. PICS: Process Instrument and Control Suppier.
11. PLC: Programmable Logic Controller.
12. RTU: Remote Terminal Unit.
13. SCADA: Supervisory Control and Data Acquisition.
14. SCS: Supervisory Control System.
15. SDT: Software Demonstration Test.
16. SLDC: Single Loop Digital Controller.
17. SSDT: Staging Site Demonstration Test.
18. VFD: Variable Frequency Drive.

B. Enclosure: Control panel, console, cabinet, or instrument housing.

C. Instructor Day: Eight hours of actual instruction time.

D. Standard Software: Software packages that are independent of Project on which they are used. Standard software includes system software, supervisory control, and data acquisition (SCADA) software.

1. System Software: Application independent (non-project specific) software developed by digital equipment manufacturers and software companies. Includes, but is not limited to, operating systems; network support, programming languages (C, C++, Visual C++, BASIC, Visual Basic, etc); Office Suites (word processor,

spreadsheet, database, etc.); e-mail; security (firewall, antivirus; spam, spyware, etc.) debugging aids; and diagnostics.

2. SCADA Software: Software packages independent of specific process control project on which they are used. Includes, but is not limited to, providing configuring and run-time capability for, data acquisition (I/O driver, OPC servers, etc.), monitoring, alarming, human-machine interface, supervisory control, data collection, data retrieval, trending, report generation, control, and diagnostics.

3. Controller Programming Software: Software packages for the configuring and developing application software for PLCs.

E. Application Software: Software to provide functions unique to this Project and that are not provided by standard software alone, including but not limited to:

1. Configuring databases, tables, displays, historians, reports, parameter lists, ladder logic, function block, and control strategies required to implement functions unique to this Project.

2. Programming in any programming or scripting language.

F. Rising/Falling: Define action of discrete devices about their setpoint.

1. Rising: Contacts close when an increasing process variable rises through setpoint.

2. Falling: Contacts close when a decreasing process variable falls through setpoint.

G. Signal Types:

1. Analog Signal, Current Type:

a. 4 to 20 mA dc signals conforming to ISA S50.1.

b. Unless otherwise indicated for specific PIC subsection components, use the following ISA S50.1 options.

1) Transmitter Type: Number 2, two-wire.

2) Transmitter Load Resistance Capacity: Class L.

3) Fully isolated transmitters and receivers.

2. Analog Signal, Voltage Type: 1 to 5 volts dc within panel where common high precision dropping resistor is used.

3. Discrete signals, two-state logic signals using dc or 120V ac sources as indicated.

4. Pulse Frequency Signals:

a. Direct-current pulses whose repetition rate is linearly proportional to process variable.

b. Pulses generated by contact closures or solid state switches.

c. Power source less than 30V dc.

5. Special Signals: Other types of signals used to transmit analog and digital information between field elements, transmitters, receivers, controllers, and digital devices.

1.04 SYSTEM DESCRIPTION

A. Design Requirements:

1. Complete detailed design of PIC components and PIC drawings, including panel wiring diagrams, loop wiring diagrams, and interconnecting wiring diagrams.

2. Provide consistent hardware and software functions for PIC. For example, provide functions in control logic, sequence controls, and display layouts in same or similar manner.

3. PIC design as shown and specified includes:

a. Functional requirements, performance requirements, and component specifications.

b. P&IDs, and network diagrams.

4. Typical drawings for installation details, control panel layouts, and control diagrams.

B. A single qualified PIC System Integrator for the following work:

1. Application Software: As specified in Section 2.10, Applications Software.

2. For PIC Equipment and Ancillaries:

a. Completing detail design.

b. Submittals.

c. Equipment, enclosures, and ancillaries.

d. Instructions, details, and recommendations to, and coordination with Contractor for Certificate of Proper Installation.

e. Verify readiness for operation.

f. Verify correctness of final power and signal connections (lugging and connecting).

g. Adjusting and calibrating.

h. Starting up.

i. Testing and coordination of testing.

j. Training.

3. Non-PIC Equipment Directly Connected to PIC Equipment:

a. Obtain from Contractor, manufacturers' information on installation, interface, function, and adjustment.

b. Coordinate with Contractor to allow required interface and operation with PIC.

c. For operation and control, verify installations, interfacing signal terminations, and adjustments have been completed in accordance with manufacturer's recommendations.

d. Test to demonstrate required interface and operation with PIC.

e. Examples of items in this category, but not limited to the following:

1) Valve operators, position switches, and controls.

2) Motor control centers.

3) Adjustable speed and adjustable frequency drive systems.

1.05 OWNER ICS STANDARDS AND SITE ACCESS

A. Site Access: Prior to entering the project site, obtain from the Owner the necessary documentation and provide to the Owner all requested security information before accessing the site

B. Standards: Follow these minimum requirements:

1. Copper and Fiber Cabling: Installation and documentation in accordance with Building Industry Consulting Services, International (BICSI).

2. Communication Cabling: Test traces in both direcitons with as-built documentation certifying installation meets or exceeds manufacturer's warranty and ISO Certification Standards.

3. Documentation:

a. All documentation provided in both paper and electronic format. Electronic format as follows:

1) Application Software: Native electronic files in original programming format.

2) Printable Documentation: Microsoft Office, Visio, or Adobe Acrobat PDF.

b. Application Software Functional Documentation: Functional diagram following ISO 31320-1 IDEF0. Obtain examples from Owner for similar scope and level of detail.

c. PLC Program: Document all logic and special functions, including program header, rung, and element tags and descriptions in sufficient detail to allow interpretation and diagnostics by Owner and by Third-Party programmer.

4. Application Software:

a. Application software shall be ustomized for the City of Missoula Composting project. The software shall be CompstWatch cloud-based control system.

5. Networking:

a. Obtain IP addresses for new devices from Owner's WPC ICS Support Services.

b. Network Definitions and Requirements:

1) Control Network includes I/O racks and field devices connected to PLC.

2) SCADA Network includes SCADA HMI terminals and PLCs.

1.06 SUBMITTALS

A. General:

1. Submit proposed Submittal breakdown consisting of sequencing and packaging of information in accordance with Project Schedule.

2. Partial Submittals not in accordance with Project Schedule will not be accepted.

3. Submittal Format:

a. Electronic Copies: Required, unless otherwise noted for specific items.

1) Manufacturers' Standard Documents: Adobe Acrobat PDF.

2) Documents created specifically for Project:

a) Text and Graphics: Microsoft Word.

b) Lists: Microsoft Excel, unless otherwise noted for specific items.

c) Drawings: Autocad.

4. Identify proposed items, options, installed spares, and other provisions for future work (for example, reserved panel space; unused components, wiring, and terminals).

5. Legends and Abbreviation Lists:

a. Definition of symbols and abbreviations used; for example, engineering units, flowstreams, instruments, structures, and other process items used in nameplates, legends, data sheets, point descriptions, SCADA displays, alarm/status logs, and reports.

b. Use identical abbreviations in PIC subsections.

c. Submit updated versions as they occur.

6. Activity Completion:

a. Action Submittals: Completed when reviewed and approved.

b. Informational Submittals: Completed when reviewed and found to meet conditions of the Contract.

B. Action Submittals:

1. Bill of Materials: List of required equipment.

a. Group equipment items by enclosure and field, and within an enclosure, as follows:

1) PIC Components: By component identification code.

2) Other Equipment: By equipment type.

b. Data Included:

1) Equipment tag number.

2) Description.

3) Manufacturer, complete model number and all options not defined by model number.

4) Quantity supplied.

5) Component identification code where applicable.

6) For panels, include panel reference number and name plate inscription.

7) Brief description of component application within the PICS.

2. Catalog Cuts: I&C components, electrical devices, and mechanical devices:

a. Catalog information, marked to identify proposed items and options.

b. Descriptive literature.

c. External power and signal connections.

d. Scaled drawings showing exterior dimensions and locations of electrical and mechanical interfaces.

3. Instrument List:

a. Refer to Supplement Instrument List for initial list. Data from this may be used as starting point for creating final Instrument List and Component Data Sheets.

b. Update list with manufacturer and complete model number for each instrument.

c. Submit updated version of Instrument List.

d. Electronic Copies: Microsoft Excel.

4. Component Data Sheets: Data sheets for I&C components.

a. Format:

1) Similar to ISA TR20.00.01.

2) Microsoft Excel, one component per data sheet.

3) Submit proposed format for Component Data Sheets before completing data sheets for individual components.

b. Content: Specific features and configuration data for each component, including but not limited to:

1) Tag Number.

2) Component type identification code and description.

3) Location or service.

4) Service conditions.

5) Manufacturer and complete model number.

6) Size and scale range.

7) Setpoints.

8) Materials of construction.

9) Options included.

10) Power requirements.

11) Signal interfaces.

12) Name, address, and telephone number of manufacturer's local office, representative, distributor, or service facility.

c. Electronic Copies: Microsoft Excel.

5. Preliminary Panel Elevation Drawings: Provide prior to submitting Panel Construction Drawings:

   a. Scale Drawings: Show dimensions and location of front of panel devices.

   b. Panel Legend (Bill of Material): List front of panel devices by tag number. Include nameplate inscriptions, service legends, and annunciator inscriptions.

   c. Submit electronic copies of Drawings.

6. Panel Construction Drawings:

   a. Scale Drawings: Show dimensions and locations of panel-mounted devices, doors, louvers, subpanels, internal and external.

   b. Panel Legend (Bill of Material): List front of panel devices by tag numbers, nameplate inscriptions, service legends, and annunciator inscriptions keyed to the associated layout or location drawings.

   c. Bill of Materials: List devices mounted within panel that are not listed in panel legend. Include tag number, description, manufacturer, and model number keyed to the associated layout or location drawings.

   d. Construction Details: NEMA rating, materials, material thickness, structural stiffeners and brackets, lifting lugs, mounting brackets and tabs, door hinges and latches, and welding and other connection callouts and details.

   e. Construction Notes: Finishes, wire color schemes, wire ratings, wire, terminal block numbering, and labeling scheme.

   f. Submit electronic copies of Drawings.

7. Panel Wiring Diagrams:

a. Cover wiring within a panel including, but not limited to, instrumentation, control, power, and communications, and digital networks.

b. Objectives: For use in wiring panels, making panel connections, and future panel trouble shooting.

c. Diagram Type:

1) Ladder diagrams where hard wired control logic, permissives or interposing relays are used. Include devices that are mounted in or on the panel that require electrical connections. Identify individual components or devices with the Bill of Materials' key identifier and tag number. Show unique rung numbers on left side of each rung.

2) Schematic drawings for wiring of circuits that cannot be well represented by ladder diagrams.

3) Wire interconnect drawings of entire PICS showing all conductor connections within panels and between panels, field devices, motor controls.

d. Item Identification: Identify each item with attributes listed below in all diagrams and Drawings.

1) Wires: Wire number and color. Cable number if part of multiconductor cable.

2) Terminals: Location (enclosure number, terminal junction box number, or MCC number), terminal strip number, and terminal block number.

3) Components:

a) Tag number, terminal numbers, Bill of Materials key identifier, and location ("FIELD", enclosure number, or MCC number).

b) Switching action (open or close on rising or falling process variable), setpoint value and units, and process variable description (for example, Sump Level High).

4) I/O Points: PLC unit number, I/O tag number, I/O address, terminal numbers, and terminal strip numbers.

5) Relay Coils:

a) Tag number and its function.

b) On right side of run where coil is located, list contact location by ladder number and sheet number. Underline normally closed contacts.

6) Relay Contacts: Coil tag number, function, and coil location (ladder rung number and sheet number).

7) Communications and Networks: Network type, address or node identification, port or channel number, and type of connector.

8) Identify external power sources with distribution panel name or number, motor control center (MCC) and associated circuit breaker number with the panel or MCC.

9) Identify individual components or devices with the Bill of Materials' key identifier and tag number.

e. Show each circuit individually. No "typical" diagrams or "typical" wire lists will be allowed.

f. Ground wires, surge protectors, and connections.

g. Wire and Cable Names: Show names and wire color corresponding to Circuit and Raceway Schedule and electrical drawings for circuits entering and leaving a panel. Refer to Division 26, Electrical.

8. Communications and Digital Networks Diagrams:

a. Scope: Includes connections to Ethernet network, and fieldbus (for example, Modbus, Profibus, Foundation Fieldbus, Device Net, etc.).

b. Format: Network schematic diagrams for each different type of network.

c. Show:

1) Interconnected devices, both passive and active.

2) Device names and numbers.

3) Terminal numbers.

4) Communication Media: Type of cable.

5) Connection Type: Type of connector.

6) Node and device address numbers.

7) Wire and cable numbers and colors.

9. Panel Power Requirements and Heat Dissipation: For control panels tabulate and summarize:

a. Required voltages, currents, and phases(s).

b. Maximum heat dissipations Btu per hour.

c. Calculations.

d. Steady State Temperature Calculations: For nonventilated panels, provide heat load calculations showing the panel estimated internal steady state temperature for ambient air temperatures of 110 degrees F.

10. Installation Details: Include modifications or further details required and define installation of I&C components.

11. Spares, expendables, and test equipment.

12. Electronic Copies: Microsoft Excel.
13. PLC I/O List: Submit I/O assignment and Rack/Slot/Point.
14. Color schedule for control panels.
15. Operator Workstation.
16. Applications Software Documentation:
    a. Complete configuration documentation for microprocessor based programmable devices.
    b. Functional diagram in accordance with ISO 31320-1 IDEF0.
    c. For each device, include program listings, showing:
        1) Ladder logic.
        2) Configuration, calibration, and tuning parameters.
        3) Descriptive annotations for each program, ladder rung, and program element.
    d. Graphic Screens used for Operator interface and Control.
17. UPS Sizing calculations including runtime based on connected load.
18. Refer to PIC subsections for additional requirements.

C. Informational Submittals:
1. Statements of Qualification:
    a. PIC System Integrator.
    b. PIC System Integrator's site representative.
    c. Resume for each PIC System Integrator's onsite startup and testing team member (engineers, technicians, and software/configuring personnel).
2. Operation and Maintenance Data: In accordance with Section 01 78 23, Operation and Maintenance Data, and in addition the following:
    a. General:
        1) Provide sufficient detail to allow operation, removal, installation, adjustment, calibration, maintenance and purchasing replacements for PIC components.
        2) Submittal Format: Both hard copy and electronic copies for all submittals. Refer to Article Submittals, heading Submittal Format.
    b. Final versions of Legend and Abbreviation Lists.
    c. Process and Instrumentation Diagrams: Marked up copy of revised P&ID to reflect as-built PIC design.

d. Provide the following items as defined under heading Action Submittals:

1) Bill of materials.

2) Catalog cuts.

3) Instrument list.

4) Detailed Wiring Diagrams: As-built drawings.

a) Panel wiring diagrams.

b) Interconnecting wiring diagrams.

5) Applications software documentation.

e. Manufacturer's O&M manuals for components, electrical devices, and mechanical devices:

1) Content for Each O&M Manual:

a) Table of Contents.

b) Operations procedures.

c) Installation requirements and procedures.

d) Maintenance requirements and procedures.

e) Troubleshooting procedures.

f) Calibration procedures.

g) Internal schematic and wiring diagrams.

h) Component and I/O Module Calibration Sheets from field quality control calibrations.

2) Provide PDF file will linked index to all manuals.

f. List of spares, expendables, test equipment and tools provided.

g. List of additional recommended spares, expendables, test equipment, and tools. Include quantities, unit prices, and total costs.

3. Provide Manufacturer's Certificate of Proper Installation where specified.

4. Testing Related Submittals:

a. Factory Demonstration Test:

1) Preliminary Test Procedures: Outline of proposed tests, forms, and checklists.

2) Final Test Procedures:

a) Proposed test procedures, forms, and checklists.

b) Capacity, Timing, and Simulation: Describe simulation and monitoring methods used to demonstrate compliance with capacity and timing requirements.

3) Test Documentation: Copy of signed off test results.

b. Functional Test:

1) Preliminary Test Procedures: Outline of proposed tests, forms, and checklists.

2) Final Test Procedures: Proposed test procedures, forms, and checklists.

3) Test Documentation:

a) Copy of signed-off test results.

b) Completed component calibration sheets.

c. Performance Test:

1) Preliminary Test Procedures: Outline of proposed tests, forms, and checklists.

2) Final Test Procedures: Proposed test procedures, forms, and checklists.

3) Test Documentation: Copy of signed-off test results.

5. Owner Training Plan: In accordance with Section 01 79 00, Classroom and Demonstration Training.

6. Application Software: Final electronic copy of all PLC and SCS application software provided for the project.

1.07 QUALITY ASSURANCE

A. Qualifications:

1. PIC System Supplier: Minimum of 10 years' experience providing, integrating, and starting up similar systems as required for this Project.

2. PIC System Integrator's Site Representative: Minimum of 5 years' experience commissioning systems similar size and complexity to this project.

3. PIC System Supplier shall be:

a. Reotemp Instruments Corporation

b. Or Approved Equal.

B. PIC Coordination Meetings:

1. PIC Schedule Coordination Meeting:

a. Timing: Following Engineer review of PIC Schedule.

b. Purpose: Discuss Engineer's comments and resolve scheduling issues.

2. Application Software Meetings:
    a. Timing: Following Engineer review of the Applications Software Documentation submittal.
    b. Purpose: Discuss Engineer's comments and resolve issues.
3. Applications Software.
4. Training Coordination Meeting:
    a. Timing: Following Engineer review of preliminary training plan.
    b. Purpose:
        1) Resolve required changes to proposed training plan.
        2) Identify specific Owner personnel to attend training.

1.08 DELIVERY, STORAGE, AND HANDLING

A. Prior to shipment, include corrosive inhibitive vapor capsules in shipping containers, and related equipment as recommended by capsule manufacturer.

B. Prior to installation, store items in dry indoor locations. Provide heating in storage areas for items subject to corrosion under damp conditions.

1.09 SEQUENCING AND SCHEDULING

A. Prerequisite Activities and Lead Times: Do not start following key Project activities until prerequisite activities and lead times listed below have been completed and satisfied:
    1. Shop Drawing Reviews by Engineer:
        a. Prerequisite: Engineer acceptance of Schedule of Values and Progress Schedule.
        b. Schedule: In accordance with completed schedule of Shop Drawing and Sample submittals specified in Section 01 33 00, Submittal Procedure.
    2. Test Prerequisite: Associated test procedures Submittals completed.
    3. Training Prerequisite: Associated training plan Submittal completed.

1.10 MAINTENANCE - SERVICE

A. Telephone Support: Provide telephone support including troubleshooting for a period of one (1) year from substantial completion.

B. Remote Software Support: Provide remote software support including troubleshooting for a period of one (1) year from substantial completion.

1.11 EXTRA MATERIALS

A. In computing spare parts quantities based on specified percentages, round up to nearest whole number.

B. Spare Parts:

Description	Percent of Each Type and Size Used	No Less Than
DC power supplies	20	2
Fuses	20	5
Relays	20	3
Spare PLC Processor		1
Spare PLC Power Supply		1
Spare PLC IO Cards		2 (1 of each type used)
Spare PLC Communication Cards		1 (1 of each type used)

PART 2 - PRODUCTS

2.01 GENERAL

A. Provide PIC functions shown on Drawings and required in PIC subsections for each system and loop. Furnish equipment items required in PIC subsections. Furnish materials, equipment, and software, whether indicated or not, necessary to effect required system and loop performance.

B. First Named Manufacturer: PIC design is based on first named manufacturers of equipment, materials, and software.

1. If an item is proposed from other than first named manufacturer, obtain approval from Engineer for such changes in accordance with the General Conditions, Article 6.05 Substitutes and “Or-Equals”.

2. If proposed item requires, but not limited to, different installation, wiring, raceway, enclosures, intrinsically safe barriers, and accessories, provide such equipment and work.

C. Like Equipment Items:

1. Use products of one manufacturer and of the same series or family of models to achieve standardization for appearance, operation, maintenance, spare parts, and manufacturer’s services.

2. Implement same or similar functions in same or similar manner. For example control logic, sequence controls, and display layouts.

2.02 I&C COMPONENTS

A. Specifications: Refer to Section 40 91 00, Instrumentation and Control Components, for specifications for I&C components.

B. Instrument Components: Major components for each process area are listed in Instrument List referenced in Article Supplements. Furnish all equipment that is necessary to achieve required loop performance.

2.03 PROGRAMMABLE LOGIC CONTROLLERS

A. Provide Programmable Logic Controller system as shown and specified. Reference the following for requirements:

1. PLC IO List in Article, Supplements.
2. PLC Component Specifications in Section 40 91 00, Instrumentation and Control Components.
3. Drawings PID-3, PID-4 and PID-5.

2.04 NETWORK AND SCADA COMPONENTS

A. Reference PIC subsections.

2.05 SERVICE CONDITIONS

A. Standard Service Conditions: The following defines certain types of environments. PIC subsections refer to these definitions by name to specify the service conditions for individual equipment units. Design equipment for continuous operation in these environments:

1. Inside, Air Conditioned:
   a. Temperature:
      1) Normal: 60 degrees F to 80 degrees F.
      2) With Up to 4-Hour HVAC System Interruptions: 40 degrees F to 105 degrees F.
   b. Relative Humidity:
      1) Normal: 10 percent (winter) to 70 percent (summer).
      2) With Up to 4-Hour HVAC System Interruption: 10 percent to 100 percent.
   c. NEC Classification: Nonhazardous.
2. Inside:
   a. Temperature: 20 degrees F to 104 degrees F.
   b. Relative Humidity: 10 percent to 100 percent.
   c. NEC Classification: Nonhazardous.
3. Outside:
   a. Temperature: Minus 20 degrees F to 104 degrees F.
   b. Relative Humidity: 10 percent to 100 percent. , rain, snow and freezing rain.

c. NEC Classification: Nonhazardous.

B. Standard Service Conditions for Panels and Consoles: Unless otherwise noted, design equipment for continuous operation in these environments:

1. Freestanding Panel and Consoles:

a. Inside, Air Conditioned: NEMA 1.

b. Inside: NEMA 12.

2. Smaller Panels and Assemblies (that are not freestanding):

a. Inside, Air Conditioned: NEMA 12.

b. All Other Locations: NEMA 4X.

3. Field Elements: Outside.

2.06 NAMEPLATES AND TAGS

A. All Equipment/devices like Pumps, Mixers, Valves, Instruments, Control Panel, Local Control Stataion etc shall be provided with a physical lamacoid label with the Tag Number and a description of the device.

Label Type	**Size**	**Lines**	**Font Height**
A	75 x 31 (3” x 1 ¼”)	2	line 1 = 6.5mm, line 2 = 5 mm

Line 1: Equipment Tag number – Eg, COMP-FAN-101
Line 2: Equipment description – Eg, COMPOST FAN NO. 1

B. Panel Nameplates: Enclosure identification located on enclosure face.

1. Location and Inscription: As shown on Drawings.

2. Materials: Laminated plastic attached to panel with stainless steel screws.

3. Letters: 1/2-inch-high, white on black background, unless otherwise noted.

C. Component Nameplates, Panel Face: Component identification located on panel face under or near component.

1. Location and Inscription: As shown on panel drawing.

2. Materials: Adhesive-backed, laminated plastic.

3. Letters: 3/16-inch-high, white on black background, unless otherwise noted.

D. Component Nameplates, Back of Panel: Component identification located on or near component inside of enclosure.

1. Inscription: Component tag number.

2. Materials: Adhesive-backed, laminated plastic.

3. Letters: 3/16-inch-high, white on black background, unless otherwise noted.

E. Legend Plates for Panel Mounted Pushbuttons, Lights, and Switches.

1. Inscription:

a. Refer to table under Paragraph Standard Pushbutton Colors and Inscriptions.

b. Refer to table under Paragraph Standard Light Colors and Inscriptions.

c. Refer to P&IDs on Drawings.

2. Materials: Stainless steel, keyed legend plates. Secured to panel by mounting nut for pushbutton, light, or switch.

3. Letters: Black on gray or white background.

F. Service Legends: Component identification nameplate located on face of component.

1. Inscription: As shown on panel drawing.

2. Materials: Adhesive-backed, laminated plastic.

3. Letters: 3/16-inch-high, white on black background, unless otherwise noted.

G. Nametags: Component identification for field devices.

1. Inscription: Component tag number.

2. Materials: 16-gauge, Type 304 stainless steel.

3. Letters: 3/16-inch-high, imposed.

4. Mounting: Affix to component with 16-guage or 18-gauge stainless steel wire or stainless steel screws.

2.07 MECHANICAL SYSTEM COMPONENTS

A. Reference Section 40 91 00, Instrumentation and Control Components.

2.08 FUNCTIONAL REQUIREMENTS FOR CONTROL

A. Shown on Drawings, in panel control diagrams, and Process and Instrumentation Diagrams (P&ID). P&ID format and symbols are in accordance with ISA S5.1, except as specified or shown on Drawings.

B. Supplemented by standard functional requirements in PIC subsections and by Process Control Narratives that describe requirements not obvious on P&IDs or panel control diagrams. Reference Section 2.10-C, Applications Software Control Description.

2.09 ELECTRICAL REQUIREMENTS

A. Electrical Raceways: As specified in Section 26 05 33, Raceway and Boxes.

B. Wiring External to PIC Equipment:

1. Special Control and Communications Cable: Provided by PIC System Integrator as noted in Component Specifications and PIC subsections.

2. Other Wiring and Cable: As specified in Section 26 05 05, Conductors.

C. I&C and electrical components, terminals, wires, and enclosures UL recognized or UL listed.

D. Wires within Enclosures:

1. ac Circuits:

a. Type: 600-volt, Type MTW stranded copper.

b. Size: For current to be carried, but not less than No. 18 AWG.

2. Analog Signal Circuits:

a. Type: 600-volt stranded copper, twisted shielded pairs or triad with a 100 percent, aluminum-polyester shield, rated 60 degrees C.

b. Panels with Circuits Less Than 600 volts: Rated at 600 volts. Belden No. 18 AWG Type 9341, Triad Beldon No. 1121A.

c. Size: No. 18 AWG, minimum.

3. Other dc Circuits.

a. Type: 600-volt, Type MTW stranded copper.

b. Size: For current carried, but not less than No. 18 AWG.

4. Special Signal Circuits: Use manufacturer's standard cables.

5. Wire Identification: Numbered and tagged at each termination.

a. Wire Tags: Machine printed, heat shrink.

b. Manufacturers:

1) Brady Perma Sleev.

2) Tyco Electronics.

E. Terminate and identify wires entering or leaving enclosures as follows:

1. Analog and discrete signal, terminate at numbered terminal blocks.

2. Special signals terminated using manufacturer's standard connectors.

3. Identify wiring in accordance with requirements in Section 26 05 05, Conductors.

F. Terminal Blocks for Enclosures:

1. Quantity:

a. Accommodate present and spare indicated needs.

b. Wire spare PLC I/O points to terminal blocks.

c. One wire per terminal for field wires entering enclosures.

d. Maximum of two wires per terminal for No. 18 AWG wire for internal enclosure wiring.

e. Spare Terminals: 20 percent of connected terminals, but not less than 10 per terminal block, unless otherwise shown on Drawings.

2. Terminal Block Types: Reference Section 40 91 00, Instrumentation and Control Components, Part 2, Article Electrical Components.

G. Grounding of Enclosures:

1. Furnish isolated copper grounding bus for signal and shield ground connections.

2. Ground this ground bus at a common signal ground point in accordance with National Electrical Code requirements.

3. Single Point Ground for Each Analog Loop:

a. Locate signal ground at dc power supply for loop.

b. Use to ground wire shields for loop.

c. Group and ground wire shields in control panel enclosure

4. Ground terminal block rails to ground bus.

H. Analog Signal Isolators:

1. Furnish signal isolation for analog signals that are sent from one enclosure to another.

2. Do not wire in series instruments on different panels, cabinets, or enclosures.

I. Electrical Transient Protection:

1. General:

a. Function: Protect elements of PIC against damage due to electrical transients induced in interconnecting lines by lightning and nearby electrical systems.

b. Surge suppressors are not shown for external analog transmitters. Determine quantity and location, and show in Shop Drawings. Refer to example wiring in installation details in Drawings.

c. Provide, install, coordinate, and inspect grounding of surge suppressors at:

1) Connection of ac power to PIC equipment including panels, consoles assembles, and field-mounted analog transmitters and receivers.

2) At the field and panel, console, or assembly connection of signal circuits that have portions of the circuit extending outside of a protective building.

2. Surge Suppressor Types: Reference Section 40 91 00, Instrumentation and Control Components, Supplement 06, Surge Suppression Table.

3. Installation and Grounding of Suppressors:

a. As shown. See Surge Suppressor Installation Details.

b. Grounding equipment, installation of grounding equipment, and terminations for field mounted devices are provided under Division 26, Electrical.

2.10 APPLICATION SOFTWARE

A. Application software shall include the following features:

1. Real-Time Monitoring: The system will provide continuous, live data from individual wireless temperature probes, bay temperature, blower speed controls, and other critical process parameters, with real-time updates and visual representation.

2. Automatic Operation: The system will be capable of fully automating operations with pre-programmed algorithms to optimize composting conditions (e.g. temperature, aeration). The software will support dynamic adjustments to blower speeds based on live data, ensuring optimal performance.

3. User Customization: The software will allow for user-defined adjustments to parameters such as blower speed curves, temperature thresholds, and other system settings to tailor the system to the unique needs of the facility, without requiring full system reconfiguration.

4. Advanced Control: In addition to automatic operation, the system will support manual override features, allowing users to adjust settings or control equipment directly in real-time for specific operational needs or troubleshooting.

5. Data Integrity and Redundancy: The software will maintain data integrity and prevent data loss, offering continuous logging of all parameters and the ability to generate historical reports for auditing, regulatory compliance, and system performance evaluation.

6. Scalability and Expandability: The system will be scalable to accommodate facility growth, supporting additional probes, bays, and blower zones without requiring a full system overhaul. The software will allow for easy integration of future sensors or modules.

B. Additionally, the Application Software shall be capable of the following features:

1. Cloud-Based Access: The software will provide users with the ability to securely access the system from any internet-connected device, including smartphones, computers, and tablets. This cloud-based interface ensures real-time data monitoring, system configuration, and reporting. The secure platform will use encrypted protocols to protect user data and offers role-based permissions to manage access levels effectively. Whether at the facility or remotely, users can maintain full operational oversight and make informed decisions on the go.

2. Text & Email Alerts: Users will receive instant notifications for critical events, such as temperature deviations, equipment malfunctions, or system faults. The system will send these alerts through text messages and emails, ensuring timely awareness and response. Alerts will be customizable to prioritize specific events or thresholds,

reducing unnecessary disruptions while focusing on mission-critical updates to safeguard compost quality and operational efficiency.

3. Adjustable Blower Speed/Temperature Curves: The Instruments will provide users the ability to optimize operational parameters to tailor blower speeds and temperature settings to meet specific composting requirements. This feature will provide a flexible control mechanism, enabling users to match system performance with material type, seasonal conditions, or operational goals. The system will support preset and user-defined curves, allowing easy adjustments for enhanced process control and energy efficiency.
4. Manual Override Functionality: The system will enable users with manual control when needed. The manual override function enables direct intervention to adjust or stabilize operations during unexpected conditions, system faults, or special project needs. This functionality acts as a safeguard, providing peace of mind that human expertise can complement automated controls when required.
5. Automated Fault Behavior: The system will enhance system resilience by leveraging user-configurable automated fault response protocols. In the event of system errors or failures, the system can maintain critical operational parameters, such as minimum airflow or temperature levels, to protect compost viability. These settings ensure that production downtime is minimized, and environmental conditions are preserved until full system functionality is restored.
6. Customer Control: The system system will allow for independent control of individual zones, including wireless probes and blowers, ensuring optimal compost management. The software also generates comprehensive regulatory reports for PFRP tracking and includes the ability to record feedstock notes and other operational data.
7. Wireless Probe Mobility: The system will communicate with probes that will be able to seamlessly relocate between bays and zones, enabling continuous and uninterrupted temperature monitoring across all operational areas. This flexibility ensures efficient resource utilization and adaptability to changing operational requirements, providing a competitive edge in maintaining consistent compost quality.
8. Independent Zone Control: Each wireless probe and blower will operate autonomously within its designated zone, allowing precise environmental management tailored to specific composting needs.
9. Automatically Advanced Regulatory Reporting: The software will automatically generate regulatory reports for PFRP (Process to Further Reduce Pathogens) compliance, ensuring adherence to regulatory standards.
10. Enhanced Data Management: The software will include functionality to record feedstock notes and additional operational data, providing robust tracking and insights to optimize processes and maintain records.

C. The Applications Software Control Description:

1. PROCESS CONTROL OVERVIEW

   a. The new Primary Composting Facility will consist of two mirrored sections each consisting of six (6) bays and one (1) Biofilter. Each bay will have its own VFD-controlled fan as well as portable temperature monitoring that is connected to the appropriate control panel PLC via radio signal. Each bay can be controlled in either Positive Aeration Mode or Negative Aeration Mode. The normal mode of control is expected to be Negative Aeration Mode. Each mode is described below.

2. NEGATIVE AERATION MODE

   a. Negative Aeration Mode is manually setup by adjusting the fan dampers to the appropriate position to create a negative pressure within the compost pile and convey foul compost air to the Biofilter. For the negative aeration setup, the Fresh Air Inlet Damper is CLOSED, and the compost Bay Inlet Damper is OPEN, Additionally the Outlet Bay Damper is CLOSED, and the Outlet Header Damper is OPEN. This setup will pull air from the bay and into the discharge header. Air in the discharge header is pulled by the Biofilter Fan through to the Biofilter where the odor is removed before returning to the atmosphere. Temperature is automatically controlled in the composting pile by monitoring the temperature and adjusting the compost fan speed to pull more or less air through the compost bay to maintain the desired temperature.

   b. Under this mode, the Biofilter Fan speed is manually set to maintain a slightly negative suction header pressure such that influence on the compost temperature control is minimized. Temperature and Pressure are measured on the discharge side of each Biofilter Fan. Each Biofilter Fan is also fitted with manual inlet and outlet dampers that are manually set based on the fan operation. If at least one bay on a side is operating in Negative Aeration Mode, the appropriate Fan will run, and the biofilter inlet and outlet dampers are manually opened.

3. POSITIVE AERATION MODE

   a. Positive Aeration Mode is manually setup by adjusting the fan dampers to the appropriate position to create a positive pressure to the compost pile and push fresh air through to the compost pile. For the positive aeration setup, the Fresh Air Inlet Damper OPEN, and the Bay Inlet Damper is CLOSED, Additionally the Outlet Bay Damper is OPEN, and the Outlet Header Damper is CLOSED. This setup will push outside air to the compost bay. The compost bay is isolated from the discharge header so no air from this bay goes through to the Biofilter. Temperature is automatically controlled by monitoring the temperature and adjusting the compost fan speed to push more or less air through the compost to maintain the desired temperature.

   b. Under this mode, if all the adjacent six bays on this side are all operating under the Positive Aeration Mode the Biofilter Fan should be turned off.

2.11 PANEL FABRICATION

A. General:

1. Panel Construction and Interior Wiring: In accordance with the National Electrical Code (NEC), state and local codes, and applicable sections of NEMA, ANSI, UL, and ICECA.
2. Fabricate panels, install instruments and wire, and plumb at PIC System Integrator's facility. No fabrication other than correction of minor defects or minor transit damage permitted onsite.
3. UL Listing Mark for Enclosures: Mark stating "Listed Enclosed Industrial Control Panel" per UL 508A and/or "Industrial Control Panels Relating to Hazardous (Classified) Locations" per UL 698A as applicable.
4. Electrical Work: In accordance with the applicable requirements of Division 26, Electrical.

B. Temperature Control:

1. Freestanding Panels:
   a. Nonventilated Panels: Size to adequately dissipate heat from equipment mounted inside panel and on panel.
   b. Ventilated Panels:
      1) Furnish with louvers and forced ventilation as required to prevent temperature buildup from equipment mounted inside panel and on panel.
      2) For panels with backs against wall, furnish louvers on top and bottom of panel sides.
      3) For panels without backs against wall, furnish louvers on top and bottom of panel back.
      4) Louver Construction: Stamped sheet metal.
      5) Ventilation Fans:
         a) Furnish where required to provide adequate cooling.
         b) Create positive internal pressure within panel.
         c) Fan Motor Power: 120V ac, 60-Hz, thermostatically controlled.
      6) Air Filters: Washable aluminum, Hoffman Series A-FLT.
   c. Refrigerated System: Furnish where heat dissipation cannot be adequately accomplished with natural convection or forced ventilation.
2. Smaller Panels (that are not freestanding): Size to adequately dissipate heat from equipment mounted inside panel and on panel face.
3. Space Heaters:

a. Thermostatically controlled to maintain internal panel temperatures above dewpoint.

b. Refer to Control Panel Schedule in Article Supplements.

C. Freestanding Panel Construction:

1. Materials:

a. Sheet steel, unless otherwise shown on Drawings or as required for the environment being installed.

b. Minimum Thickness: 10-gauge, unless otherwise noted.

2. Panel Front:

a. Fabricated from a single piece of sheet steel, unless otherwise shown on Drawings.

b. No seams or bolt heads visible when viewed from front.

c. Panel Cutouts: Smoothly finished with rounded edges.

d. Stiffeners: Steel angle or plate stiffeners or both on back of panel face to prevent panel deflection under instrument loading or operation.

3. Internal Framework:

a. Structural steel for instrument support and panel bracing.

b. Permit panel lifting without racking or distortion.

4. Lifting rings to allow simple, safe rigging and lifting of panel during installation.

5. Adjacent Panels: Securely bolted together so front faces are parallel.

6. Door:

a. Full height, fully gasketed access door where shown on Drawings.

b. Latch: Three-point, Southco Type 44.

c. Handle: “D” ring, foldable type.

d. Hinges: Full-length, continuous, piano-type, steel hinges with stainless steel pins.

e. Rear Access: Extend no further than 24 inches beyond panel when opened to 90-degree position.

f. Front and Side Access Doors: As shown on Drawings.

D. Nonfreestanding Panel Construction:

1. Based on environmental design requirements and referenced in Article Environmental Requirements, provide the following:

a. Panels listed as inside, air conditioned:

1) Enclosure Type: NEMA 12.

2) Materials: Steel.

b. Other Panels:

1) Enclosure Type: NEMA 4X.

2) Materials: Type 316 stainless steel.

2. Metal Thickness: 14-gauge, minimum.

3. Doors:

a. Rubber-gasketed with continuous hinge.

b. Stainless steel lockable quick-release clamps.

4. Manufacturers:

a. Hoffman Engineering Co.

b. H. F. Cox.

E. Breather and Drains: Furnish with NEMA 250, Type 4 and 4X panels:

1. Manufacturer and Product: Cooper Crouse-Hinds; ECD Type 4X Drain and Breather; Drain Model ECD1-N4D, Breather Model ECD1-N4B.

F. Control Panel Electrical:

1. Power Distribution within Panels:

a. Feeder Circuits:

1) One or more 120V ac, 60-Hz feeder circuits as shown on Drawings.

2) Make provisions for feeder circuit conduit entry.

3) Furnish terminal block for termination of wires.

b. Power Panel: Furnish main circuit breaker and circuit breaker on each individual branch circuit distributed from power panel.

1) Locate to provide clear view of and access to breakers when door is open.

2) Breaker Sizes: Coordinate such that fault in branch circuit will blow only branch breaker, but not trip main breaker.

a) Branch Circuit Breakers: 15 amps at 250V ac.

3) Breaker Manufacturers and Products: Refer to Division 26.

c. Circuit Wiring: P&IDs and Control Diagrams on Drawings show function only. Use following rules for actual circuit wiring:

1) Devices on Single Circuit: 20, maximum.

2) Multiple Units Performing Parallel Operations: To prevent failure of any single branch circuit from shutting down entire operation, do not group all units on same branch circuit.

3) Branch Circuit Loading: 12 amperes continuous, maximum.

4) Panel Lighting and Service Outlets: Put on separate 15 amp, 120V ac branch circuit.

5) Provide 120V ac plugmold for panel components with line cords.

2. Signal Distribution:

a. Signal Wiring: Separate analog signal cables from power and control within a panel and cross at right angles where necessary.

b. Outside Panels: Isolated 4 to 20 mA dc only.

c. Analog Signal Wiring: Twisted shielded pairs.

d. RTD and Thermocouple Extension Cable:

1) Continuous field to panel with no intermediate junction boxes or terminations.

2) RTDs in motor windings are considered a 600-volt circuit.

3) Terminate thermocouple extension wire directly to loop instrument.

3. Signal Switching:

a. Use dry circuit type relays or switches.

b. No interruption of 4 to 20 mA loops during switching.

c. Switching Transients in Associated Signal Circuit:

1) 4 to 20 mA dc Signals: 0.2 mA, maximum.

2) 1V dc to 5V dc Signals: 0.05V, maximum.

4. Relay Types: Reference Section 40 91 00, Instrumentation and Control Components, Part 2, Article Electrical Components.

5. Push-to-Test Circuitry: For each push-to-test indicating light, provide a fused push-to-test circuit.

6. Internal Panel Lights for Freestanding Panels:

a. Type: Switched 17-Watt, 1700 Lumen, 3000K color temperature LED back-of-panel lights.

b. Quantity: One light for every 4 feet of panel width.

c. Mounting: Inside and in the top of back-of-panel area.

d. Protective metal shield for lights.

7. Service Outlets for Freestanding Panels:
   a. Type: Three-wire, 120-volt, 15-ampere, GFCI GFCI duplex receptacles.
   b. Quantity:
      1) Panels 4 Feet Wide and Smaller: One.
      2) Panels Larger than 4 Feet Wide: One for every 4 feet of panel width, two minimum per panel.
   c. Mounting: Evenly spaced along back-of-panel area.
8. Internal Panel Lights and Service Outlets for Smaller Panels:
   a. Service Outlet: Breaker protected 120-volt, 15-amp, GFCI GFCI duplex receptacle:
   b. Required for panels. Refer to Control Panel Schedule in Article Supplements.
9. Standard Pushbutton Colors and Inscriptions:
   a. Use following unless otherwise noted in individual Loop Specifications:

Tag Function	**Inscription(s)**	**Color**
OO	ON OFF	Black Black
OC	OPEN CLOSE	Black Black
OCA	OPEN CLOSE AUTO	Black Black Black
OOA	ON OFF AUTO	Black Black Black
MA	MANUAL AUTO	Black Black
SS	START STOP	Black Black
RESET	RESET	Black
EMERGENCY STOP	EMERGENCY STOP	Red

10. Standard Light Colors and Inscriptions:
    a. Use following color code and inscriptions for service legends and lens colors for indicating lights, unless otherwise noted in individual Loop Specifications:

Tag Function	Inscription(s)	Color
ON	ON	Red
OFF	OFF	Green
OPEN	OPEN	Red
CLOSED	CLOSED	Green
LOW	LOW	Amber
FAIL	FAIL	Amber
HIGH	HIGH	Amber
AUTO	AUTO	Green
MANUAL	MANUAL	Red
LOCAL	LOCAL	White
REMOTE	REMOTE	Yellow

G. PIC Enclosure Internal Wiring:

1. Restrain by plastic ties or ducts or metal raceways.
2. Hinge Wiring: Secure at each end so bending or twisting will be around longitudinal axis of wire. Protect bend area with sleeve.
3. Arrange wiring neatly, cut to proper length, and remove surplus wire.
4. Provide abrasion protection for wire bundles that pass through holes or across edges of sheet metal.
5. Connections to Screw Type Terminals:
   a. Locking-fork-tongue or ring-tongue lugs.
   b. Use manufacturer's recommended tool with required sized anvil to make crimp lug terminations.
   c. Wires terminated in a crimp lug, maximum of one.
   d. Lugs installed on a screw terminal, maximum of two.
6. Connections to Compression Clamp Type Terminals:
   a. Strip, prepare, and install wires in accordance with terminal manufacturer's recommendations.
   b. Wires installed in a compression screw and clamp, maximum of one for field wires entering enclosure, otherwise maximum of two.
7. Splicing and tapping of wires, allowed only at device terminals or terminal blocks.
8. Terminate 24V dc and analog signal circuits on separate terminal block from ac circuit terminal blocks.

9. Separate analog and dc circuits by at least 6 inches from ac power and control wiring, except at unavoidable crossover points and at device terminations.
10. Arrange wiring to allow access for testing, removal, and maintenance of circuits and components.
11. Plastic Wire Duct Fill: Do not exceed manufacturer's recommendations.
12. Conductors Carrying Foreign Voltages within a Panel:
    a. Route foreign voltage conductors into panel and land on a circuit blade disconnect type terminal block.
    b. Use wire with pink insulation to identify foreign voltage circuits within panel from terminal block on. Do not use wires with pink insulation for any other purpose.
13. Harness Wiring:
    a. 120V ac: No. 14 AWG, MTW.
    b. 24V dc: No. 16 AWG, MTW where individual conductors are used and Type TC shielded tray cable where shielded wire is used.
14. Panelwork:
    a. No exposed connections.
    b. Allow adjustments to equipment to be made without exposing these terminals.
    c. For power and control wiring operating above 80V ac or dc use covered channels or EMT raceways separate from low voltage signal circuits.
15. Plastic Wire Ducts Color:
    a. 120V ac: White.
    b. 24V dc: Gray.
    c. Communications Cables and Fiber Optic Jumpers: Orange.
16. Provide a communications plastic wire duct for communications cables and fiber optic cables between the communications devices in control panel and communications raceways. Design plastic wire duct design to take into account the minimum bending radius of the communications cable.
17. Make plastic wire ducts the same depth.
18. Provide a minimum of 1-1/2 inches between plastic wire ducts and terminal blocks.

H. Control Relay Arrangement: Install control relays associated with specific loops in same panel section as corresponding terminal blocks or side panels. Provide 20 percent space for future relays. Locate spare space in same sections as spare terminal blocks.

I. Factory Finishing:

1. Furnish materials and equipment with manufacturer's standard finish system in accordance with Section 09 90 00, Painting and Coating.
2. Use specific color if indicated. Otherwise use manufacturer's standard finish color, or light gray if manufacturer has no standard color.
3. Stainless Steel and Aluminum: Not painted.
4. Nonmetallic Panels: Not painted.
5. Steel Panels:
    a. Sand panel and remove mill scale, rust, grease, and oil.
    b. Fill imperfections and sand smooth.
    c. Paint panel interior and exterior with one coat of epoxy coating metal primer, two finish coats of two-component type epoxy enamel.
    d. Sand surfaces lightly between coats.
    e. Dry Film Thickness: 3 mils, minimum.
    f. Color: Manufacturer's standard.

2.12 CORROSION PROTECTION

A. Corrosion-Inhibiting Vapor Capsules:
1. Areas Where Required: Refer to Part 3, Article Protection.
2. Manufacturers and Products:
    a. Northern Instruments; Model Zerust VC.
    b. Hoffmann Engineering; Model A-HCI.

2.13 SOURCE QUALITY CONTROL

A. General:
1. Engineer may actively participate in many of the tests.
2. Engineer reserves right to test or retest specified functions.
3. Engineer's decision will be final regarding acceptability and completeness of testing.
4. Procedures, Forms, and Checklists:
    a. Except for Unwitnessed Factory Test, conduct tests in accordance with, and documented on, Engineer accepted procedures, forms, and checklists.
    b. Describe each test item to be performed.
    c. Have space after each test item description for sign off by appropriate party after satisfactory completion.
5. Required Test Documentation: Test procedures, forms, and checklists signed by Engineer and Contractor.

6. Conducting Tests:
    a. Provide special testing materials and equipment.
    b. Wherever possible, perform tests using actual process variables, equipment, and data.
    c. If not practical to test with real process variables, equipment, and data provide suitable means of simulation.
    d. Define simulation techniques in test procedures.
    e. Test Format: Cause and effect.
        1) Person conducting test initiates an input (cause).
        2) Specific test requirement is satisfied if correct result (effect), occurs.

B. Unwitnessed Factory Test:
    1. Scope: Inspect and test PIC to ensure it is operational, ready for FDT.
    2. Location: PIC System supplier's facility.
    3. Integrated Test:
        a. Interconnect and test PIC, except for wired primary elements and smaller panels.
        b. Exercise and test functions.
        c. Provide stand-alone testing of smaller panels.
        d. Simulate inputs and outputs for primary elements.
        e. Test all communication and control with all panels including VFDs provided by the PIC supplier.

C. Factory Demonstration Tests (FDT):
    1. Notify Engineer of test schedule 4 weeks prior to start of test.
    2. Scope:
        a. Test entire PIC panels and system, including VFD's in drive panels and certain smaller panels, to demonstrate it is operational.
    3. Location: PIC System supplier's facility. If the PIC System supplier's Facility is outside a 100 mile radius of the project site, the contractor shall pay all Owner's and engineer's travel expenses associate with witnessing tests.
    4. Correctness of wiring from panel field terminals to PLC system input/output points and to panel components.
        a. Simulate each discrete signal at terminal strip.
        b. Simulate correctness of each analog signal using current source.

5. Operation of communications between PLCs and VFDs in drive panels.
6. Loop-Specific Functions: Demonstrate functions shown on P&IDs, control diagrams, and loop specifications:
    a. One of each type function; for example, if there are filter backwash sequence control for several identical filters, demonstrate controls for one filter.
    b. One of each type of function in each panel; for example, but not limited to annunciator operation, controller operation, and recorder operation.
7. Nonloop-Specific Functions:
    a. Capacity: Demonstrate that PIC systems have required spare capacity for expansion. Include tests for both storage capacity and processing capacity.
    b. Timing: Include tests for timing requirements.
    c. Diagnostics: Demonstrate online and offline diagnostic tests and procedures.
8. Correct deficiencies found and complete prior to shipment to Site.
9. Failed Tests:
    a. Repeat and witnessed by Engineer.
    b. With approval of Engineer, certain tests may be conducted by PIC System Integrator and witnessed by Engineer as part of Functional Test.
10. Make following documentation available to Engineer at test site both before and during FDT:
    a. Drawings, Specifications, Addenda, and Change Orders.
    b. Master copy of FDT procedures.
    c. List of equipment to be tested including make, model, and serial number.
    d. Approved hardware Shop Drawings for equipment being tested.
    e. Approved preliminary software documentation Submittal.
11. Daily Schedule for FDT:
    a. Begin each day with meeting to review day's test schedule.
    b. End each day with each meeting to review day's test results and to review or revise next day's test schedule.

PART 3 - EXECUTION

3.01 EXAMINATION

A. For equipment not provided by PIC System Integrator, but that directly interfaces with PIC, verify the following conditions:
    1. Proper installation.

2. Correct control action.
3. Switch settings and dead bands.
4. Input and output signals.

3.02 INSTALLATION

A. Material and Equipment Installation: Follow manufacturers' installation instructions, unless otherwise indicated or directed by Engineer.

B. Wiring connected to PIC components and assemblies, including power wiring in accordance with requirements in Section 26 05 19, Low-Voltage Electrical Power Conductors & Cables.

C. Electrical Raceways: As specified in Section 26 05 33, Raceway and Boxes.

D. Mechanical Systems:

1. Copper and Stainless Steel Tubing Support: Continuously supported by aluminum tubing raceway system.
2. Tubing and Conduit Bends:
   a. Tool-formed without flattening, and of same radius.
   b. Bend Radius: Equal to or larger than conduit and tubing manufacturer's recommended minimum bend radius.
   c. Slope instrument connection tubing in accordance with installation details.
   d. Straighten coiled tubing by unrolling on flat surface. Do not pull to straighten.
   e. Make up and install fittings in accordance with manufacturer's recommendations. Verify make up of tube fittings with manufacturer's inspection gauge.
   f. Use lubricating compound or TFE tape on stainless steel threads to prevent seizing or galling.
   g. Run tubing to allow but not limited to, clear access to doors, controls and control panels; and to allow for easy removal of equipment.
   h. Provide separate support for components in tubing runs.
   i. Supply expansion loops and use adapters at pipe, valve, or component connections for proper orientation of fitting.
   j. Keep conduit runs at least 12 inches from hot pipes.
   k. Locate and install tubing raceways in accordance with manufacturer's recommendations. Locate tubing to prevent spillage, overflow, or dirt from above.
   l. Securely attach tubing raceways to building structural members.
3. Enclosure Lifting Rings: Remove rings following installation and plug holes.

3.03 FIELD QUALITY CONTROL

A. General:

1. Coordinate PIC testing with Owner and affected Subcontractors.
2. Notify Engineer of Performance Test schedule 4 weeks prior to start of test.
3. Engineer may actively participate in tests.
4. Engineer reserves right to test or retest specified functions.
5. Engineer's decision will be final regarding acceptability and completeness of testing.

B. Onsite Supervision:

1. Require PIC System Integrator to observe PIC equipment installation to extent required in order to provide Certificates of Proper Installation.
2. Require PIC site representative to supervise and coordinate onsite PIC activities.
3. Require PIC site representative to be onsite while onsite work covered by this section and PIC subsystems is in progress.

C. Testing Sequence:

1. Provide Functional Tests and Performance Tests for facilities as required to support staged construction and startup of plant.
2. Refer to article Sequence of Work under Section 01 31 00, Project Management and Coordination, for a definition of project milestones.
3. Refer to Section 01 91 00, Commissioning .
4. Completion: When tests (except Functional Test) have been completed and required test documentation has been accepted.

D. Testing:

1. Prior to Facility Startup and Performance Evaluation, inspect, test, and document that associated PIC equipment is ready for operation.
2. Operational Readiness Test (ORT). ORT is conducted jointly by the Contractor and the PIC System Supplier: Prior to the Functional Test, startup test period and Performance Testing, inspect, test, and document that entire PIC is ready for operation.
    a. PIC System Supplier shall confirm that the system is ready by performing the following:
    b. Inspect the installation to verify it is complete.
    c. Field wiring including network cabling has been properly installed.
    d. Confirm panels have been been powered up.
    e. Verify instruments are correctly configured and calibrated.

f. Test all analog signals with at least five points (0%, 25%, 50%, 75% and 100%) for proper operation.

g. Test all Descrete signals for proper operation.

h. Document test results.

3. Functional Test:

a. Scope: PIC System Supplier to confirm, including applications software, the system is ready for operation.

b. Prerequisite: Completion of ORT.

c. Repeat of PIC System Supplier FDT, except using real field sensors and equipment. Plant interlocking and communications with PLCs and VFD's shall be tested on loop-by-loop basis.

d. Test procedures provided by PIC System Supplier.

e. Refer to PIC subsections for additional requirements.

f. Completed when Functional Test has been conducted and Engineer has spot-checked associated test forms and checklists in field.

4. Required Test Documentation: Test procedures, forms, and checklists. Signed by Engineer and Contractor except for Functional Test items signed only by Contractor.

5. Performance Acceptance Tests (PAT): These are the activities that Section 01 91 00, Commissioning.

a. Once ORT Phase and Functional Test has been completed and facility has been started up and signed off by the Engineer, perform a witnessed PAT on complete PIC and software to demonstrate that it is operating as required by the Contract Documents and software control description. Demonstrate each required function on a paragraph-by-paragraph, loop-by-loop basis.

b. Loop-specific and non-loop-specific tests same as required for FDT and Functional Test except that entire installed PIC tested using actual process variables and all functions demonstrated. Refer to Section 2.10, Applications Software.

c. Perform local and manual tests for each loop before proceeding to remote and automatic modes.

d. Where possible, verify test results using visual confirmation of process equipment and actual process variable. Unless otherwise directed, exercise and observe devices supplied by others, as needed to verify correct signals to and from such devices and to confirm overall system functionality. Test verification by means of disconnecting wires or measuring signal levels is acceptable only where direct operation of plant equipment is not possible.

e. Make updated versions of documentation required for PAT available to Owner at Site, both before and during tests.

f. Make one copy of all software O&M manuals available to the Owner at the Site both before and during testing.

E. Refer to examples of Performance Test procedures and forms in Article Supplements.

3.04 TRAINING

A. General:

1. Provide an integrated training program for Owner's personnel.

2. Perform training to meet specific needs of Owner's personnel.

3. Include training sessions, classroom and field, for managers, engineers, operators, and maintenance personnel.

4. Provide instruction on three working shift(s) as needed to accommodate the Owner's personnel schedule.

5. Owner reserves the right to reuse videotapes of training sessions.

B. Operations and Maintenance Training:

1. General:

a. Refer to specific requirements specified in PIC Subsections.

b. Include review of O&M data and survey of spares, expendables, and test equipment.

c. Use equipment similar to that provided.

d. Unless otherwise specified in PIC subsections, provide training suitable for instrument technicians with at least a 2-year associate engineering or technical degree, or equivalent education and experience in electronics, instrumentation, or digital systems.

2. Operations Training: For Owner's operations personnel on operation of I&C components.

a. Training Session Duration: 1 instructor day.

b. Number of Training Sessions: Two.

c. Location: Project Site.

d. Course Objective: Develop skills needed to use I&C components and functions to monitor and control the plant on a day-to-day basis.

e. Content: Conduct training on loop-by-loop basis.

1) Loop Functions: Understanding of loop functions, including interlocks for each loop.

2) Loop Operation: For example, adjusting process variable setpoints, AUTO/MANUAL control transfer, AUTO and MANUAL control, annunciator acknowledgement and resetting.

3) Interfaces with PIC subsystems.

3. Maintenance Training:

a. Training Session Duration: 1 instructor day.

b. Number of Training Sessions: Two.

c. Location: Project Site.

d. Course Objective: Develop skills needed for routine maintenance of PIC.

e. Content: Provide training for each type of component and function provided.

1) Loop Functions: Understanding details of each loop and how they function.

2) Component calibration.

3) Adjustments: For example, controller tuning constants, current switch trip points, and similar items.

4) Troubleshooting and diagnosis for equipment and software.

5) Replacing lamps, chart paper, and fuses.

6) I&C components removal and replacement.

7) Periodic preventive maintenance.

3.05 CLEANING

A. Upon completion of Work, remove materials, scraps, and debris from interior and exterior of equipment.

3.06 PROTECTION

A. Use corrosion-inhibiting vapor capsules in enclosures to protect electrical, instrumentation, and control devices, including spare parts, from corrosion.

B. Periodically replace capsules based on capsule manufacturer's recommendations.

END OF SECTION 40 90 00B

SECTION 40 91 00
INSTRUMENTATION AND CONTROL COMPONENTS

PART 1 - GENERAL

1.01 SUMMARY

A. This section gives general requirements for instrumentation and control components.

1.02 REFERENCES

B. The following is a list of standards which may be referenced in this section:

1. NSF International (NSF):

a. NSF/ANSI 61, Drinking Water System Components - Health Effects.

b. NSF/ANSI 372, Drinking Water System Components - Lead Content.

PART 2 - PRODUCTS

2.01 GENERAL

A. Article Mechanical Systems Components covers requirements of mechanical PIC components that are not specifically referenced by Section 40 90 00, Instrumentation and Control for Process Systems, Instrument Lists or Data Sheets.

B. Article Electrical Components covers requirements for electrical PIC components that are not specifically referenced by Section 40 90 00, Instrumentation and Control for Process Systems, Instrument Lists or Data Sheets.

C. All other Part 2 articles cover components that are referenced by Instrument Lists or Data Sheets in this Section 40 91 00, Instrumentation and Control Components, or by specific component numbers in other PIC subsections.

D. Components and Materials in Contact with Water for Human Consumption: Comply with the requirements of the Safe Drinking Water Act and other applicable federal, state, and local requirements. Provide certification by manufacturer or an accredited certification organization recognized by the Authority Having Jurisdiction that components and materials comply with the maximum lead content standard in accordance with NSF/ANSI 61 and NSF/ANSI 372.

1. Use or reuse of components and materials without a traceable certification is prohibited.

2.02 ELECTRICAL COMPONENTS

A. Terminal Blocks for Enclosures:

1. General:

a. Connection Type: Screw compression clamp.

b. Compression Clamp:

1) Complies with DIN-VDE 0611.

2) Hardened steel clamp with transversal grooves that penetrate wire strands providing a vibration-proof connection.

3) Guides strands of wire into terminal.

c. Screws: Hardened steel, captive, and self-locking.

d. Current Bar: Copper or treated brass. Provide corrosion protection for all exposed copper.

e. Insulation:

1) Thermoplastic rated for minus 131 degrees F to plus 230 degrees F.

2) Two funneled shaped inputs to facilitate wire entry.

f. Mounting:

1) Standard DIN rail.

2) Terminal block can be extracted from an assembly without displacing adjacent blocks.

3) End Stops: Minimum of one at each end of rail.

g. Wire Preparation: Stripping only permitted.

h. Jumpers: Allow jumper installation without loss of space on terminal or rail.

i. Marking System:

1) Terminal number shown on both sides of terminal block.

2) Allow use of preprinted and field marked tags.

3) Terminal strip numbers shown on end stops.

4) Mark terminal block and terminal strip numbers as shown on panel control diagrams and loop diagrams.

5) Fuse Marking for Fused Terminal Blocks: Fuse voltage and amperage rating shown on top of terminal block.

j. Test Plugs: Soldered connections for 18 AWG wire.

1) Pin Diameter: 0.079 inch.

2) Quantity: 20, (need two plugs per test meter).

3) Manufacturer and Product: Entrelec; Type FC2.

2. Terminal Block, General Purpose:

a. Rated Voltage: 600V ac.

b. Rated Current: 30 amp.

c. Wire Size: 24 AWG to 10 AWG.

d. Rated Wire Size: 10 AWG.

e. Color: Gray body.

f. Spacing: 0.25 inch, maximum.

g. Test Sockets: One screw test socket 0.079-inch diameter.

h. Manufacturer and Product: Entrelec; Type M4/6.T.

3. Terminal Block, Ground:

a. Wire Size: 24 AWG to 10 AWG.

b. Rated Wire Size: 10 AWG.

c. Color: Green and yellow body.

d. Spacing: 0.25 inch, maximum.

e. Grounding: Electrically grounded to mounting rail.

f. Manufacturer and Product: Entrelec; Type M4/6.P.

4. Terminal Block, Blade Disconnect Switch:

a. Rated Voltage: 600V ac.

b. Rated Current: 10 amp.

c. Wire Size: 22 AWG to 10 AWG.

d. Rated Wire Size: 10 AWG.

e. Color: Gray body, orange switch.

f. Spacing: 0.25 inch, maximum.

g. Manufacturer and Product: Entrelec; Type M4/6.SNT.

5. Terminal Block Diode:

a. Rated Voltage: 24V dc.

b. Rated Current: 30 ma.

c. Wire Size: 16 AWG.

d. Manufacturer and Product: Phoenix Contact ST-IN.

6. Terminal Block, Fused, 24V dc:

a. Rated Voltage: 600V dc.

b. Rated Current: 25 amp.

c. Wire Size: 22 AWG to 10 AWG.

d. Rated Wire Size: 10 AWG.

e. Color: Gray body.

f. Fuse: 0.25 inch by 1.25 inches.

g. Indication: LED diode 24V dc.

h. Spacing: 0.512 inch, maximum.

i. Manufacturer and Product: Entrelec; Type ML10/13.SFD.

7. Terminal Block, Fused, 120V ac:
    a. Rated Voltage: 600V ac.
    b. Rated Current: 25 amp.
    c. Wire Size: 22 AWG to 10 AWG.
    d. Rated Wire Size: 10 AWG.
    e. Color: Gray body.
    f. Fuse: 0.25 inch by 1.25 inches.
    g. Indication: Neon lamp, 110V ac.
    h. Leakage Current: 1.8 mA, maximum.
    i. Spacing: 0.512 inch, maximum.
    j. Manufacturer and Product: Entrelec; Type ML10/13.SFL.
8. Terminal Block, Fused, 120V ac, High Current:
    a. Rated Voltage: 600V ac.
    b. Rated Current: 35 amps.
    c. Wire Size: 18 AWG to 8 AWG.
    d. Rated Wire Size: 8 AWG.
    e. Color: Gray.
    f. Fuse: 13/32 inch by 1.5 inches.
    g. Spacing: 0.95 inch, maximum.
    h. Manufacturer and Product: Entrelec; Type MB10/24.SF.

B. Relays:
1. General:
    a. Relay Mounting: Plug-in type socket.
    b. Relay Enclosure: Furnish dust cover.
    c. Socket Type: Screw terminal interface with wiring.
    d. Socket Mounting: Rail.
    e. Provide holddown clips.
2. PLC Interface Relay:
    a. Type: Narrow design for high density and direct connection of field wiring to relay terminals.
    b. Function: Covert PLC input to dry contact for isolated discrete signal interface.
    c. Relay Mounting: Plug into terminal block style socket.

d. Socket Mounting: DIN rail.

e. Socket Width: 0.25 inch nominal.

f. Coil Voltage: 120V ac or 24V dc to suit application.

g. Coil Power: 0.5 VA.

h. Expected Mechanical Life: 10,000,000 operations.

i. Operating Indicator: LED lights when coil is energized.

j. Contact Arrangement: One Form C, SPDT contact.

k. Contact Rating: 5A, at 24V dc and 250V ac.

l. Connection Type: Screw compression clamp.

m. Terminal Marking: Numbered with preprinted or field-marked tags.

n. Manufacturers and Products:

1) Phoenix Contact; PLC-RSC Series.

2) Allen-Bradley; Bulletin 700-HL Terminal Block Relays.

3) Idec; RV8H Series.

3. Signal Switching Relay:

a. Type: Dry circuit.

b. Contact Arrangement: 2 Form C contacts.

c. Contact Rating: 5 amps at 28V dc or 120V ac.

d. Contact Material: Gold or silver.

e. Coil Voltage: As noted or shown.

f. Coil Power: 0.9 watt (dc), 1.2VA (ac).

g. Expected Mechanical Life: 10,000,000 operations.

h. Expected Electrical Life at Rated Load: 100,000 operations.

i. Indication Type: Neon or LED indicator lamp.

j. Seal Type: Hermetically sealed case.

k. Manufacturer and Product: Potter and Brumfield; Series KH/KHA.

4. Control Circuit Switching Relay, Nonlatching:

a. Type: Compact general purpose plug-in.

b. Contact Arrangement: 3 Form C contacts.

c. Contact Rating: 10A at 28V dc or 120V ac, and 6.6A at 240V ac.

d. Contact Material: Silver cadmium oxide alloy.

e. Coil Voltage: As noted or shown.

f. Coil Power: 1.8 watts (dc), 2.7VA (ac).

g. Expected Mechanical Life: 10,000,000 operations.

h. Expected Electrical Life at Rated Load: 100,000 operations.

i. Indication Type: Neon or LED indicator lamp.

j. Push-to-test button.

k. Manufacturer and Product: Potter and Brumfield; Series KUP.

5. Control Circuit Switching Relay, Latching:

a. Type: Dual coil mechanical latching relay.

b. Contact Arrangement: 2 Form C contacts.

c. Contact Rating: 10A at 28V dc or 120V ac.

d. Contact Material: Silver cadmium oxide alloy.

e. Coil Voltage: As noted or shown.

f. Coil Power: 2.7 watts (dc), 5.3VA (ac).

g. Expected Mechanical Life: 500,000 operations.

h. Expected Electrical Life at Rated Load: 50,000 operations.

i. Manufacturer and Product: Potter and Brumfield; Series KB/KBP.

6. Control Circuit Switching Relay, Time Delay:

a. Type: Adjustable time delay relay.

b. Contact Arrangement: 2 Form C contacts.

c. Contact Rating: 10A at 30V dc or 277V ac.

d. Contact Material: Silver cadmium oxide alloy.

e. Coil Voltage: As noted or shown.

f. Operating Temperature: Minus 50 degrees F to 131 degrees F.

g. Repeatability: Plus or minus 2 percent.

h. Delay Time Range: Select range such that time delay setpoint fall between 20 percent to 80 percent of range.

i. Time Delay Setpoint: As noted or shown.

j. Mode of Operation: As noted or shown.

k. Adjustment Type: Integral potentiometer with knob external to dust cover.

l. Manufacturer and Products: Potter and Brumfield; Series CB for 0.1-second to 100-minute delay time ranges, Series CK for 0.1-second to 120-second delay time ranges.

C. Surge Suppressors:

1. General:

a. Construction: First-stage, high-energy metal oxide varistor and second-stage, bipolar silicon avalanche device separated by series impedance; includes grounding wire, stud, or terminal.

b. Response: 5 nanoseconds maximum.

c. Recovery: Automatic.

d. Temperature Range: Minus 68 degrees F to plus 185 degrees F.

e. Enclosure Mounted: Encapsulated inflame retardant epoxy.

2. Suppressors on 120V ac Power Supply Connections:

a. Occurrences: Tested and rated for a minimum of 50 occurrences of IEEE C62.41 Category B test waveform.

b. First-Stage Clamping Voltage: 350 volts or less.

c. Second-Stage Clamping Voltage: 210 volts or less.

d. Power Supplies for Continuous Operation:

1) Four-Wire Transmitter or Receiver: Minimum5 amps at 130V ac.

2) All Other Applications: Minimum 30 amps at 130V ac.

3. Suppressors on Analog Signal Lines:

a. Test Waveform: Linear 8-microsecond rise in current from 0 amps to a peak current value followed by an exponential decay of current reaching one-half the peak value in 20 microseconds.

b. Surge Rating: Tested and rated for 50 occurrences of 2,000-amp peak test waveform.

1) dc Clamping Voltage: 20 percent to 40 percent above operating voltage for circuit.

2) dc Clamping Voltage Tolerance: Plus or minus 10 percent.

3) Maximum Loop Resistance: 18 ohms per conductor.

4. Manufacturers and Products:

a. Analog Signals Lines: Emerson Edco PC-642 or SRA-64 series.

b. 120V ac Lines: Emerson Edco HSP-121.

c. Field Mounted at Two-Wire Instruments (Type 3):

1) Encapsulated in stainless steel pipe nipples.

2) Emerson Edco SS64 series.

d. Field Mounted at Four-Wire Instruments (Type 4): With 120V ac outlet, ac circuit breaker, and 10-ohm resistors on signal lines, all in enclosure.

1) Enclosure:

a) NEMA 4X fiberglass with door.

b) Maximum Size: 12 inches by 12 inches by 8 inches deep.

2) Emerson Edco; SLAC series.

D. Power Supplies:

1. Furnish as required to power instruments requiring external dc power, including two-wire transmitters and dc relays. Provide dual power supplies with diode auctioneered outputs.
2. Convert 120V ac, 60-Hz power to dc power of appropriate voltage(s) with sufficient voltage regulation and ripple control to assure that instruments being supplied can operate within their required tolerances.
3. Provide output over voltage and over current protective devices to:
   a. Protect instruments from damage due to power supply failure.
   b. Protect power supply from damage due to external failure.
4. Enclosures: NEMA 1.
5. Mount such that dissipated heat does not adversely affect other components.
6. Fuses: For each dc supply line to each individual two-wire transmitter.
   a. Type: Indicating.
   b. Mount so fuses can be easily seen and replaced.

3.03 I&C COMPONENTS

A. M43 Intrusion Switch:

1. General:
   a. Function: Monitor intrusion of entry points such as doors, overhead doors, and chain link gates.
   b. Type:
      1) Magnetic.
      2) Large.
   c. Parts: Magnet, switch, and cabling.
2. Features:
   a. Type: Large magnet, surface-mount suitable for door, unless otherwise noted.
   b. Cable: Armored, 36 inches long.
   c. Mounting Kits:
      1) For Overhead Doors: If noted.
      2) Angle bracket for door mounting.
   d. Magnet Length: 2.5 inches, nominal.

e. Magnet and Switch Dimensions: Each, 2.6 long by 0.875 wide by 0.600 thick, nominal inches.

f. Housing: Weather-resistant aluminum.

g. Two holes on switch and magnet for fasteners.

h. Current Sensor Assembly: If noted.

1) Suited for use in 24V ac/dc circuits to protect the 10 watt rated standard switch.

2) Includes shunt-to-ground circuit that shunts voltage above 60V ac/dc to ground.

3) Quick blow fuse blows at 0.5 amp.

i. Additional Features: If and as noted.

3. Signal Interface:

a. Switch: DPDT.

b. Contact Rating: 5 watts dc, unless otherwise noted.

c. Maximum Voltage: 175V dc.

d. Maximum Switching Current: 0.25 amp dc.

4. Manufacturer and Product:

a. George Risk Industries; intrusion switch, Model 4405-A.

b. No substitution allowed.

B. P06 Pressure Seal, Diaphragm:

1. General:

a. Function: Isolate sensing element from process fluid.

b. Type:

1) Diaphragm.

2) Fluid filled between diaphragm and sensing element.

2. Service:

a. Pressure: Same as associated sensor.

b. Temperature Range: If noted.

3. Performance:

a. Pressure:

1) For threaded process connections, at least 2,500 psig at 100 degrees F.

2) Glycerin Fill: Suitable only for pressure (not vacuum applications).

b. Temperature:

1) Dependent upon fill fluid.

a) Glycerin (food grade): 0 degree F to 400 degrees F.

b) Silicone: Minus 40 degrees F to plus 600 degrees F.

c) Silicone (food grade): 0 degree F to 375 degrees F.

d) Halocarbon: Minus 70 degrees F to 300 degrees F.

4. Features:

a. Materials:

1) Lower Housing: Type 316 stainless steel, unless otherwise noted or recommended by manufacturer.

2) Diaphragm Material: Type 316 stainless steel, unless otherwise noted or recommended by manufacturer.

3) Top Housing: Steel, unless otherwise noted.

b. Diaphragm: Welded to upper housing, unless otherwise noted.

c. Filling screw in upper housing.

d. Fill Fluid:

1) Glycerin.

2) Or approved equal.

3) Factory assembled and filled.

e. Flushing Connection: 1/4-inch NPT in lower housing.

f. Diaphragm Seal Displacement: 0.1-cubic-inch, nominal.

5. Connections:

a. Instrument: 1/2-inch female NPT, unless otherwise noted or shown.

b. Process: 1/2-inch female NPT, unless otherwise noted or shown.

6. Manufacturers and Products:

a. Ashcroft; Type 201.

b. Ametek; Mansfield and Green Division; Type SG.

c. WIKA; Type L990.10.

C. P9 Pressure Transmitter:

1. General:

a. Function: Measure pressure and transmit signal proportional to pressure.

b. Type:

1) Electronic variable capacitance or silicon strain gauge.

2) Two-wire transmitter; “smart electronics.”

c. Parts: Transmitter and accessories.

2. Performance:
    a. Range: As noted.
        1) Select transmitter's factory upper range limit (URL) such that upper boundary of noted range is as close as possible to 80 percent of factory URL, but does not exceed it.
    b. Accuracy: Plus or minus 0.075 percent of span, unless otherwise noted.
    c. Ambient Operating Temperature: Minus 40 degrees F to plus 175 degrees F, with integral meter.
    d. Process Operating Temperature: Minus 40 degrees F to plus 250 degrees F.
    e. Humidity: 0 percent to 100 percent relative humidity.
    f. Hazardous Location Certifications: If and as noted.
3. Features:
    a. Type: Gauge pressure, unless otherwise noted.
    b. Adjustable damping.
    c. LCD Indicator: Display in either percent or engineering units, field configurable.
    d. Wetted Metallic Parts: Type 316 stainless steel, unless otherwise noted.
        1) Includes drain/vent valves; process flanges and adapters, and process isolating diaphragm.
    e. Wetted O-Rings: Glass filled TFE, graphite filled PTFE, or Viton, unless otherwise noted.
    f. Bolts and Nuts (if required): Type 316 stainless steel, unless otherwise noted.
    g. Fill Fluid: Silicone, unless otherwise noted.
4. Process Connections:
    a. Line Size: 1/2 inch.
    b. Connection Type: FNPT.
    c. Direct/remote Diaphragm Seal.
5. Signal Interface:
    a. 4 mA to 20 mA dc output with digital signal based on HART protocol.
    b. Nominal Maximum Loop Resistance with External 24V dc Power Supply: 550 ohms.
6. Enclosure:
    a. Type: NEMA 4X, minimum, unless otherwise noted.
    b. Materials: Coated aluminum, unless otherwise noted.

c. Mounting bracket, unless otherwise noted.

1) Bracket and Accessories: Stainless steel; suitable for mounting transmitter to panel or 2-inch pipe.

7. Accessories:

a. Two-valve (Isolate and Vent) Stainless Steel Manifold: If shown..

8. Manufacturers and Products:

a. Endress+Hauser; PMC71.

b. Rosemount; Model 3051 TG.

c. Siemens; SITRANS P310 Series.

D. T02 Dual Temperature Element and Transmitter, Wireless:

1. General:

a. Function: Measure temperature of compost material and transmit analog signal proportional to temperature.

b. Type: RTD.

c. Parts: Element, thermowell, and transmitter.

2. Service:

a. Process Fluid: As noted.

b. Process Temperature Range: As noted.

3. Element:

a. Probe:

1) Corrosion Proof CPVC sheath with stainless steel stem inside.

2) 2 temperature sensors per probe.

3) 60" total insertion length;

a) 1st sensor 2" from tip.

b) 2nd sensor 36" from tip.

4) Pointed Tip - CPVC - Range 1.5+ Miles line of sight.

b. Performance:

1) System Accuracy (combined sensor and A/D accuracy): +/- 2°F (+/- 1°C).

c. Features:

1) Signal Type: Wireless Transmitter.

2) Temperature Range: 0 to 200F

3) Environmental Temperature Limits: -40 to 185°F (-40 to 85°C)

4) Environmental Humidity: 0-95% noncondensing.

5) NEMA 4X housing.

6) Battery: Self-contained battery power.

7) Battery Life: 1 year (at 15 min. intervals.)

8) 48" orange visibility flag.

9) 1-year limited warranty. SP – TBD

4. Manufacturers and Products:

a. Reotemp EcoProbe; Model ECOMOD60CPVCBT02M36FD.

E. T03 Temperature Element and Transmitter, Resistance:

1. General:

a. Function: Measure temperature of process fluid and transmit analog signal proportional to temperature.

b. Type: RTD.

c. Parts: Element, thermowell, and transmitter.

2. Service:

a. Process Fluid: As noted.

b. Process Temperature Range: As noted.

3. Element:

a. Type:

1) Single element, unless otherwise noted.

2) Three-wire, RTD.

3) Platinum, 100-ohm nominal at 0 degree C.

b. Performance:

1) Sensor Accuracy for 900 degrees F and Below: Plus or minus 0.5 degree F or plus or minus 0.25 percent of reading, whichever is larger.

c. Features:

1) Dimensions (Bare Element): 1/4-inch diameter.

2) Length to accommodate thermowell insertion and extension length.

3) Spring-loaded element when thermowell is used.

4) Sheath:

a) Type 316 stainless steel, unless otherwise noted.

b) Process Operating Temperature Range: Minus 320 degrees F to 900 degrees F, unless otherwise noted.

5) Terminal Connection Head:

a) General purpose, NEMA 4 weatherproof, unless otherwise noted.

b) Maximum Ambient Temperature: 220 degrees F, unless otherwise noted.

6) Thermowell Connection: Union coupler, stainless steel, unless otherwise noted.

7) Sensitive Length: 1.6-inch minimum, measured from closed end.

4. Thermowell:

a. Features:

1) Inside Diameter: Sized to match RTD.

2) Material: Type 316 stainless steel, unless otherwise noted.

3) Insertion Length: As noted.

4) Extension Length: 3 inches, unless otherwise noted.

b. Process Connection: 1-inch NPT connection, unless otherwise noted.

c. Well Type: Threaded straight, unless otherwise noted.

5. Transmitter:

a. Ambient Operation Conditions:

1) Temperature: Minus 20 degrees F to 158 degrees F, with display.

2) Relative Humidity: 0 percent to 100 percent, noncondensing.

b. Type: Two-wire, powered by remote power supply.

c. Performance:

1) Digital Accuracy: Greater of plus or minus 0.09 degree F or plus or minus 0.01 percent of span.

2) Response Time: 1.2 second 90 percent response time for 80 percent input step, with minimum damping.

d. Features:

1) Indicator: Three-line LCD, unless otherwise noted.

2) Automatic reference junction compensation.

3) FAILSAFE Mode:

a) User configurable ON, unless otherwise noted.

b) Downscale, unless otherwise noted.

4) Electric Damping: 1.2 seconds.

e. Signal Interface: 4 mA dc to 20 mA dc.

f. Power: Loop Powered.

g. Digital Communication: HART.

1) Supply one HART communicator for HART capable transmitters, if not already supplied under another specification section.

h. Enclosure:

1) Materials: Epoxy-coated, low-copper aluminum, unless otherwise noted.

2) Type: NEMA 4X.

3) Mounting: Wall, pipe stand, or integral to thermowell, as noted.

a) For pipe stand, provide stainless steel mounting set, unless otherwise noted.

b) For integral thermowell mount, provide explosion-proof connection.

6. Manufacturers and Products:

a. Burns; 200 Series.

b. Rosemount; 78 Series Platinum RTD with Thermowell and Model 3144P Transmitter.

c. Invensys/Foxboro; RTT20 Series Transmitter with PR Series RTD and T-Series Thermowell.

d. Endress+Hauser; iTemp Series.

F. Y40 Uninterruptible Power Supply System:

1. General:

a. Function: Provides isolated, regulated uninterrupted ac output power during a complete or partial interruption of incoming line power.

b. Major Parts: Inverter, battery charger, sealed battery.

2. Performance:

a. Capacity: Sized for connected load plus 50 percent spare capacity.

b. Input Power:

1) 120 Vac single phase, 60-Hz, unless otherwise noted.

2) Connections: Manufacturer’s standard, unless otherwise noted.

c. Output Power:

1) 120 Vac single phase, 60-Hz, unless otherwise noted.

2) Connections: Manufacturer’s standard, unless otherwise noted.

d. On-line Efficiency: 85 percent minimum, unless otherwise noted.

e. Backup Runtime:

1) Full Load: 9 minutes minimum, unless otherwise noted.

2) Half Load: 20 minutes minimum, unless otherwise noted.

f. Continuous no-break power with no measurable transfer time.

g. Sine-Wave Output Voltage Total Harmonic Distortion (THD): Plus or minus 6 percent or less.

h. Input Voltage Range: Plus 15 percent, minus 20 percent.

i. Output Voltage Regulation: Plus or minus 3 percent nominal.

j. Operating Temperature: 32 degrees to 104 degrees F.

k. Operating Relative Humidity: 5 percent to 95 percent without condensation.

l. Lightning and Surge Protection:

1) Pass lightning standard IEEE C62.41 Categories A and B tests.

2) 2000 to 1 attenuation of input spike.

3. Features:

a. Bypass Switch.

b. Monitoring Relay: Module for remote monitoring of UPS status. Minimum of two relay contacts configured for:

1) Battery LOW.

2) UPS Fault.

3) UPS Power Fail.

4) UPS on Bypass.

4. Enclosure:

a. Tower, unless otherwise noted.

b. If rack-mount noted, unit to be suitable for mounting in a 19-inch rack.

5. Manufacturers and Products:

a. Powerware; 9130T.

b. APC; SMART Tower.

G. Y50 Programmable Logic Controller System:

1. PLC units where called for in specification shall conform to the following specifications. The PLC shall be Allen-Bradley or ABB equivalent:

a. Make: Allen Bradley.

b. Series: Control Logix.

c. Module Types:

1) CPU: 1756-L82XT; with conformal coating and complete with 1756-BATM Battery module.

2) Ethernet Module: 1756-EN2T.

3) DI: 1756-IA16.

4) DO: 1756-OW16I or 1756-OA16 wired to PLC Interface Relays.

5) AI: 1756-IF16IH.

6) AO: 1756-OF8.

7) PS: 1756-PA75.

8) Chassis: 1756-A10.

d. Quantity: Minimum quantity as shown on drawings PID-3 and PID-4.

2. Tag Number: PLC-100.

H. Y99 Industrial Ethernet Switch:

1. Function: Managed switch to connect industrial control devices for Ethernet communication.

2. Performance:

a. Operating Temperature: Minus 10 degrees C to 60 degrees C.

b. Operating Humidity: 10 percent to 95 percent non-condensing.

c. Operation: Plug and play.

d. Auto Sensing: Duplex, Speed, and Cable Type.

3. Approvals:

a. FCC Part 15 Class A.

b. UL Listed.

c. Noise: EN 61000-6-2 and EN 61000-6-4.

d. RoHS Compliant.

4. Features:

a. Ports: 8 GE copper and 2 Combo (Copper/Fiber) ports, minimum.

b. Mounting: DIN Rail.

c. Indicators:

1) Per Switch: Power.

2) Per Port: Link and Activity.

5. Power Input: 10 to 30V dc.

6. Manufacturers and Products:

a. Rockwell; Stratix 5200

b. Or Equal.

I. Y100 HMI Computer:

1. Processor: Windows-based PC with Intel Core i9 Processor

2. Display:
    a. Size: 24-inch diagonal
    b. Backlight: LED.
    c. Graphics: Intel HD graphics.
    d. Expansion Slot: PCIe.
3. Mass Storage: 1 TB minimum Dual RAID 1, Solid-State Hard Disk Drive with onboard RAID controller.
4. System Memory: 32GB.
5. Ports:
    a. Serial Ports: 1 x RS232/422/485 and 1 x RS232.
    b. USB Ports: 4 x USB 3.0.
    c. Ethernet Ports: 2 x RJ45, 10/100/1000 Mbps.
    d. Graphics Ports: 1 X VGA and 1 x HDMI.
    e. Audio: 1 x Line-In and 1 x Line-Out.
6. Environmental:
    a. Degree of Protection: NEMA 4, IP66 front.
    b. Ambient Temperature: 32 degrees F to 122 degrees F.
    c. Relative Humidity: (Non-condensing) 30 to 95 percent RH at 104 degrees F.
7. Operating System: Windows 11 Professional, 64-bit Embedded.
8. Cables: As required.
9. Software: MS OFFICE Professional
10. Manufacturer and Product:
    a. Dell
    b. Or Equal.

PART 3 - EXECUTION

3.01 GENERAL

A. Drawings for PICS Mechanical Systems are diagramatic and not intended to specifically define element locations or piping and tubing run lengths. Base materials and installations on field measurements.

3.02 INSTALLATION

B. Mechanical Systems:
    1. Copper and Stainless Steel Tubing Support: Continuously supported by aluminum tubing raceway system.

2. Plastic Tubing Support: Except as shown on Drawings, provide continuous support in conduit or by aluminum tubing raceway system.
3. Install conduit for plastic tubing and tubing raceways parallel with, or at right angles to, structural members of buildings. Make vertical runs straight and plumb.
4. Tubing and Conduit Bends:
    a. Tool-formed without flattening, and all of same radius.
    b. Bend Radius: Equal to or larger than conduit and tubing manufacturer's recommended minimum bend radius.
    c. Slope instrument connection tubing in accordance with installation details.
    d. Do not run liquid filled instrument tubing immediately over or within a 900mm plan view clearance of electrical panels, motor starters, or mechanical mounting panel without additional protection. Where tubing must be located in these zones, shield electrical device to prevent water access to electrical equipment.
    e. Straighten all coiled tubing by unrolling on flat surface. Do not pull to straighten.
    f. Cut tubing square with sharp tubing cutter. Deburr cuts and remove chips. Do not gouge or scratch surface of tubing.
    g. Blow debris from inside of tubing.
    h. Make up and install fittings in accordance with manufacturer's recommendations. Verify makeup of tube fittings with manufacturer's inspection gauge.
    i. Use lubricating compound or TFE tape on stainless steel threads to prevent seizing or galling.
    j. Run tubing to allow but not limited to, clear access to doors, controls and control panels; and to allow for easy removal of equipment.
    k. Provide separate support for components in tubing runs.
    l. Supply expansion loops and use adapters at pipe, valve, or component connections for proper orientation of fitting.
    m. Keep tubing and conduit runs at least 300mm from hot pipes.
    n. Locate and install tubing raceways in accordance with manufacturer's recommendations. Locate tubing to prevent spillage, overflow, or dirt from above.
    o. Securely attach tubing raceways to building structural members.
5. Enclosure Lifting Rings: Remove rings following installation and plug holes.

C. Wiring: Refer to Section 40 90 00, Instrumentation and Control for Process Systems and Division 26, Electrical.

D. Lighting Arresters:

1. Connect lightning arrester ground terminal to main ground lug at MCC other locations prescribed by manufacturer's instructions via low resistance wiring.

3.03 FIELD QUALITY CONTROL

A. In accordance with Section 40 90 00, Instrumentation and Control for Process Systems.

3.04 TRAINING

A. Refer to Section 40 90 00, Instrumentation and Control for Process Systems.

B. Operations Training: For Owner's operations personnel on operation of instruments and panel components.

1. Trainer: PICs supplier.

2. Training Session Duration: 1 instructor day.

3. Number of Training Sessions: Two.

4. Location: Project site.

5. Content: Conduct training on loop-by-loop basis.

a. Loop Functions: Understanding of loop functions, including interlocks for each loop.

b. Loop Operation: For example, adjusting process variable set points, equipment troubleshooting, AUTO and MANUAL control, and alarm resetting.

c. Interfaces with PICS Subsystems.

C. Maintenance Training:

1. Trainer: PICs supplier.

2. Training Session Duration: 1 instructor day.

3. Number of Training Sessions: Two.

4. Location: Project site.

5. Content: Provide training for each type of component and function provided.

a. Loop Functions: Understanding details of each component and how they function.

b. Component calibration.

c. Adjustments: For example, controller configuration, current switch trip points, and similar items.

d. Troubleshooting and diagnosis for and components.

e. Replacing lamps, chart paper, fuses.

f. Instrumentation components removal and replacement.

g. Periodic maintenance.

3.05 CLEANING

A. Prior to closing system using tubing, clear all tubing of interior moisture and debris.

B. Clean all interior and exterior surfaces of control panels and field enclosures.

C. Clean all exterior surfaces and terminal compartment of instruments.

3.06 SUPPLEMENTS

D. Supplements listed below, follows “End of Section,” are part of this Specification.

1. Instrument List
2. IO List
3. Control Panel Schedule
4. Sample Test Forms

END OF SECTION 40 91 00

TAG NO.	CODE	DESCRIPTION	TYPE	COMPONENT OPTIONS	SURGE SUPPRESSION DETAIL	INSTRUMENT INSTALLATION DETAIL	P&ID	NOTES
TT/TE-101A TT/TE-101B TT/TE-101C TT/TE-102A TT/TE-102B TT/TE-102C TT/TE-103A TT/TE-103B TT/TE-103C TT/TE-104A TT/TE-104B TT/TE-104C TT/TE-105A TT/TE-105B TT/TE-105C TT/TE-106A TT/TE-106B TT/TE-106C	T02	BAY NO. 1 TEMPERATURE BAY NO. 1 TEMPERATURE BAY NO. 1 TEMPERATURE BAY NO. 2 TEMPERATURE BAY NO. 2 TEMPERATURE BAY NO. 2 TEMPERATURE BAY NO.3 TEMPERATURE BAY NO. 3 TEMPERATURE BAY NO. 3 TEMPERATURE BAY NO. 4 TEMPERATURE BAY NO. 4 TEMPERATURE BAY NO. 4 TEMPERATURE BAY NO. 5 TEMPERATURE BAY NO. 5 TEMPERATURE BAY NO. 5 TEMPERATURE BAY NO. 6 TEMPERATURE BAY NO. 6 TEMPERATURE BAY NO. 6 TEMPERATURE	WIRELESS TEMPERTURE PROBE AND TRANSMITTER	**Range:** 1.5+ miles, Line of Sight **Temperature Range:** 0 to 200F **Housing:** NEMA 4X	N/A	N/A	PID-3	Provided by PIC system supplier. Provide 6 spares.
TT/TE-107A TT/TE-107B TT/TE-107C TT/TE-108A TT/TE-108B TT/TE-108C TT/TE-109A TT/TE-109B TT/TE-109C TT/TE-110A TT/TE-110B TT/TE-110C TT/TE-111A TT/TE-111B TT/TE-111C TT/TE-112A TT/TE-112B TT/TE-112C	T02	BAY NO. 7 TEMPERATURE BAY NO. 7 TEMPERATURE BAY NO. 7 TEMPERATURE BAY NO. 8 TEMPERATURE BAY NO. 8 TEMPERATURE BAY NO. 8 TEMPERATURE BAY NO. 9 TEMPERATURE BAY NO. 9 TEMPERATURE BAY NO. 9 TEMPERATURE BAY NO. 10 TEMPERATURE BAY NO. 10 TEMPERATURE BAY NO. 10 TEMPERATURE BAY NO. 11 TEMPERATURE BAY NO. 11 TEMPERATURE BAY NO. 11 TEMPERATURE BAY NO. 12 TEMPERATURE BAY NO. 12 TEMPERATURE BAY NO. 12 TEMPERATURE	WIRELESS TEMPERTURE PROBE AND TRANSMITTER	**Range:** 1.5+ miles, Line of Sight **Temperature Range:** 0 to 200F **Housing:** NEMA 4X	N/A	N/A	PID-4	Provided by PIC system supplier. Provide 6 spares.
TIT/TE-113	T03	BIOFILTER FAN NO. 1 TEMPERATURE		**Temperature Range:** 0 to 200F **Process Fluid:** Compost Foul Air	M-30 SS2	M-30 Details 3, 4, & 5	PID-3	Provided by PIC system supplier.
TIT/TE-114	T03	BIO FILTER FAN NO. 2 TEMPERATURE		**Temperature Range:** 0 to 200F **Process Fluid:** Compost Foul Air	M-30 SS2	M-30 Details 3, 4, & 5	PID-4	Provided by PIC system supplier.

TAG NO.	CODE	DESCRIPTION	TYPE	COMPONENT OPTIONS	SURGE SUPPRESSION DETAIL	INSTRUMENT INSTALLATION DETAIL	P&ID	NOTES
PE-101	P09	BIOFILTER FAN NO. 1 PRESSURE		**Range:** 0 to 15" W.C.	M-30 SS2	M-30 Details 1, 2, & 5	PID-3	Provided by PIC system supplier.
PE-102	P09	BIOFILTER FAN NO. 2 PRESSURE		**Range:** 0 to 15" W.C.	M-30 SS2	M-30 Details 1, 2, & 5	PID-4	Provided by PIC system supplier.
UPS	Y40	CP-100 UPS						Provided by PIC system supplier and included in CP-100.
ETSW-001 ETSW-100 ETSW-200 ETSW-300	Y99	INDUSTRIAL ETHERNET SWITCH					PID-5	Provided by PIC system supplier and included in CP-100, COMP-DRV-100, COMP-DRV-200 & COMP-DRV-300.
HMI COMPUTER	Y100	HMI COMPUTER					PID-5	Provided by PIC system supplier.
PLC-100	Y50	PLC					PID-3/4/5	Provided by PIC system supplier.
XA-102	M43	CP-100 PANEL INTRUSION SWITCH					PID-3	Provided by PIC system supplier.

AREA	PANEL NO	PLC NO	TYPE	IO TAG PRE-FIX	IO TAG	SERVICE	P&ID NO.	LOOP ID
COMPOST NO. 1	CP-100	PLC-100	ETH		BIO-FAN-301-CL	BIOFILTER FAN NO. 1 "IN REMOTE" STATUS	PID-3	BIO-FAN-101
COMPOST NO. 1	CP-100	PLC-100	ETH		BIO-FAN-301-MD	BIOFILTER FAN NO. 1 RUN COMMAND	PID-3	BIO-FAN-101
COMPOST NO. 1	CP-100	PLC-100	ETH		BIO-FAN-301-MN	BIOFILTER FAN NO. 1 "RUNNING" STATUS	PID-3	BIO-FAN-101
COMPOST NO. 1	CP-100	PLC-100	ETH		BIO-FAN-301-SC	BIOFILTER FAN NO. 1 SPEED COMMAND	PID-3	BIO-FAN-101
COMPOST NO. 1	CP-100	PLC-100	ETH		BIO-FAN-301-SI	BIOFILTER FAN NO. 1 "SPEED" STATUS	PID-3	BIO-FAN-101
COMPOST NO. 1	CP-100	PLC-100	ETH		BIO-FAN-301-XF	BIOFILTER FAN NO. 1 "FAULT" STATUS	PID-3	BIO-FAN-101
COMPOST NO. 2	CP-100	PLC-100	ETH		BIO-FAN-302-CL	BIOFILTER FAN NO. 2 "IN REMOTE" STATUS	PID-4	BIO-FAN-102
COMPOST NO. 2	CP-100	PLC-100	ETH		BIO-FAN-302-MD	BIOFILTER FAN NO. 2 "SPEED" STATUS	PID-4	BIO-FAN-102
COMPOST NO. 2	CP-100	PLC-100	ETH		BIO-FAN-302-MN	BIOFILTER FAN NO. 2 "RUN COMMAND" STATUS	PID-4	BIO-FAN-102
COMPOST NO. 2	CP-100	PLC-100	ETH		BIO-FAN-302-SC	BIOFILTER FAN NO. 2 SPEED COMMAND	PID-4	BIO-FAN-102
COMPOST NO. 2	CP-100	PLC-100	ETH		BIO-FAN-302-SI	BIOFILTER FAN NO. 2 "RUNNING" STATUS	PID-4	BIO-FAN-102
COMPOST NO. 2	CP-100	PLC-100	ETH		BIO-FAN-302-XF	BIOFILTER FAN NO. 2 "FAULT" STATUS	PID-4	BIO-FAN-102
COMPOST NO. 1	CP-100	PLC-100	ETH		COMP-FAN-101-CL	COMPOST FAN NO. 1 "IN REMOTE" STATUS	PID-3	COMP-FAN-101
COMPOST NO. 1	CP-100	PLC-100	ETH		COMP-FAN-101-MD	COMPOST FAN NO. 1 "RUN" COMMAND	PID-3	COMP-FAN-101
COMPOST NO. 1	CP-100	PLC-100	ETH		COMP-FAN-101-MN	COMPOST FAN NO. 1 "RUNNING" STATUS	PID-3	COMP-FAN-101
COMPOST NO. 1	CP-100	PLC-100	ETH		COMP-FAN-101-SC	COMPOST FAN NO. 1 SPEED COMMAND	PID-3	COMP-FAN-101
COMPOST NO. 1	CP-100	PLC-100	ETH		COMP-FAN-101-SI	COMPOST FAN NO. 1 SPEED INDICATION	PID-3	COMP-FAN-101
COMPOST NO. 1	CP-100	PLC-100	ETH		COMP-FAN-101-XF	COMPOST FAN NO. 1 "FAULT" STATUS	PID-3	COMP-FAN-101
COMPOST NO. 1	CP-100	PLC-100	ETH		COMP-FAN-102-CL	COMPOST FAN NO. 2 "IN REMOTE" STATUS	PID-3	COMP-FAN-102
COMPOST NO. 1	CP-100	PLC-100	ETH		COMP-FAN-102-MD	COMPOST FAN NO. 2 "RUN" COMMAND	PID-3	COMP-FAN-102
COMPOST NO. 1	CP-100	PLC-100	ETH		COMP-FAN-102-MN	COMPOST FAN NO. 2 "RUNNING" STATUS	PID-3	COMP-FAN-102
COMPOST NO. 1	CP-100	PLC-100	ETH		COMP-FAN-102-SC	COMPOST FAN NO. 2 SPEED COMMAND	PID-3	COMP-FAN-102
COMPOST NO. 1	CP-100	PLC-100	ETH		COMP-FAN-102-SI	COMPOST FAN NO. 2 SPEED INDICATION	PID-3	COMP-FAN-102
COMPOST NO. 1	CP-100	PLC-100	ETH		COMP-FAN-102-XF	COMPOST FAN NO. 2 "FAULT" STATUS	PID-3	COMP-FAN-102
COMPOST NO. 1	CP-100	PLC-100	ETH		COMP-FAN-103-CL	COMPOST FAN NO. 3 "IN REMOTE" STATUS	PID-3	COMP-FAN-103
COMPOST NO. 1	CP-100	PLC-100	ETH		COMP-FAN-103-MD	COMPOST FAN NO. 3 "RUN" COMMAND	PID-3	COMP-FAN-103
COMPOST NO. 1	CP-100	PLC-100	ETH		COMP-FAN-103-MN	COMPOST FAN NO. 3 "RUNNING" STATUS	PID-3	COMP-FAN-103
COMPOST NO. 1	CP-100	PLC-100	ETH		COMP-FAN-103-SC	COMPOST FAN NO. 3 SPEED COMMAND	PID-3	COMP-FAN-103
COMPOST NO. 1	CP-100	PLC-100	ETH		COMP-FAN-103-SI	COMPOST FAN NO. 3 SPEED INDICATION	PID-3	COMP-FAN-103
COMPOST NO. 1	CP-100	PLC-100	ETH		COMP-FAN-103-XF	COMPOST FAN NO. 3 "FAULT" STATUS	PID-3	COMP-FAN-103
COMPOST NO. 1	CP-100	PLC-100	ETH		COMP-FAN-104-CL	COMPOST FAN NO. 4 "IN REMOTE" STATUS	PID-3	COMP-FAN-104
COMPOST NO. 1	CP-100	PLC-100	ETH		COMP-FAN-104-MD	COMPOST FAN NO. 4 "RUN" COMMAND	PID-3	COMP-FAN-104
COMPOST NO. 1	CP-100	PLC-100	ETH		COMP-FAN-104-MN	COMPOST FAN NO. 4 "RUNNING" STATUS	PID-3	COMP-FAN-104
COMPOST NO. 1	CP-100	PLC-100	ETH		COMP-FAN-104-SC	COMPOST FAN NO. 4 SPEED COMMAND	PID-3	COMP-FAN-104
COMPOST NO. 1	CP-100	PLC-100	ETH		COMP-FAN-104-SI	COMPOST FAN NO. 4 SPEED INDICATION	PID-3	COMP-FAN-104
COMPOST NO. 1	CP-100	PLC-100	ETH		COMP-FAN-104-XF	COMPOST FAN NO. 4 "FAULT" STATUS	PID-3	COMP-FAN-104
COMPOST NO. 1	CP-100	PLC-100	ETH		COMP-FAN-105-CL	COMPOST FAN NO. 5 "IN REMOTE" STATUS	PID-3	COMP-FAN-105
COMPOST NO. 1	CP-100	PLC-100	ETH		COMP-FAN-105-MD	COMPOST FAN NO. 5 "RUN" COMMAND	PID-3	COMP-FAN-105
COMPOST NO. 1	CP-100	PLC-100	ETH		COMP-FAN-105-MN	COMPOST FAN NO. 5 "RUNNING" STATUS	PID-3	COMP-FAN-105
COMPOST NO. 1	CP-100	PLC-100	ETH		COMP-FAN-105-SC	COMPOST FAN NO. 5 SPEED COMMAND	PID-3	COMP-FAN-105
COMPOST NO. 1	CP-100	PLC-100	ETH		COMP-FAN-105-SI	COMPOST FAN NO. 5 SPEED INDICATION	PID-3	COMP-FAN-105
COMPOST NO. 1	CP-100	PLC-100	ETH		COMP-FAN-105-XF	COMPOST FAN NO. 5 "FAULT" STATUS	PID-3	COMP-FAN-105
COMPOST NO. 1	CP-100	PLC-100	ETH		COMP-FAN-106-CL	COMPOST FAN NO. 6 "IN REMOTE" STATUS	PID-3	COMP-FAN-106
COMPOST NO. 1	CP-100	PLC-100	ETH		COMP-FAN-106-MD	COMPOST FAN NO. 6 "RUN" COMMAND	PID-3	COMP-FAN-106
COMPOST NO. 1	CP-100	PLC-100	ETH		COMP-FAN-106-MN	COMPOST FAN NO. 6 "RUNNING" STATUS	PID-3	COMP-FAN-106
COMPOST NO. 1	CP-100	PLC-100	ETH		COMP-FAN-106-SC	COMPOST FAN NO. 6 SPEED COMMAND	PID-3	COMP-FAN-106
COMPOST NO. 1	CP-100	PLC-100	ETH		COMP-FAN-106-SI	COMPOST FAN NO. 6 SPEED INDICATION	PID-3	COMP-FAN-106
COMPOST NO. 1	CP-100	PLC-100	ETH		COMP-FAN-106-XF	COMPOST FAN NO. 6 "FAULT" STATUS	PID-3	COMP-FAN-106
COMPOST NO. 2	CP-100	PLC-100	ETH		COMP-FAN-107-CL	COMPOST FAN NO. 7 "IN REMOTE" STATUS	PID-4	COMP-FAN-107
COMPOST NO. 2	CP-100	PLC-100	ETH		COMP-FAN-107-MD	COMPOST FAN NO. 7 "RUN" COMMAND	PID-4	COMP-FAN-107
COMPOST NO. 2	CP-100	PLC-100	ETH		COMP-FAN-107-MN	COMPOST FAN NO. 7 "RUNNING" STATUS	PID-4	COMP-FAN-107
COMPOST NO. 2	CP-100	PLC-100	ETH		COMP-FAN-107-SC	COMPOST FAN NO. 7 SPEED COMMAND	PID-4	COMP-FAN-107
COMPOST NO. 2	CP-100	PLC-100	ETH		COMP-FAN-107-SI	COMPOST FAN NO. 7 SPEED INDICATION	PID-4	COMP-FAN-107
COMPOST NO. 2	CP-100	PLC-100	ETH		COMP-FAN-107-XF	COMPOST FAN NO. 7 "FAULT" STATUS	PID-4	COMP-FAN-107
COMPOST NO. 2	CP-100	PLC-100	ETH		COMP-FAN-108-CL	COMPOST FAN NO. 8 "IN REMOTE" STATUS	PID-4	COMP-FAN-108
COMPOST NO. 2	CP-100	PLC-100	ETH		COMP-FAN-108-MD	COMPOST FAN NO. 8 "RUN" COMMAND	PID-4	COMP-FAN-108
COMPOST NO. 2	CP-100	PLC-100	ETH		COMP-FAN-108-MN	COMPOST FAN NO. 8 "RUNNING" STATUS	PID-4	COMP-FAN-108
COMPOST NO. 2	CP-100	PLC-100	ETH		COMP-FAN-108-SC	COMPOST FAN NO. 8 SPEED COMMAND	PID-4	COMP-FAN-108
COMPOST NO. 2	CP-100	PLC-100	ETH		COMP-FAN-108-SI	COMPOST FAN NO. 8 SPEED INDICATION	PID-4	COMP-FAN-108
COMPOST NO. 2	CP-100	PLC-100	ETH		COMP-FAN-108-XF	COMPOST FAN NO. 8 "FAULT" STATUS	PID-4	COMP-FAN-108
COMPOST NO. 2	CP-100	PLC-100	ETH		COMP-FAN-109-CL	COMPOST FAN NO. 9 "IN REMOTE" STATUS	PID-4	COMP-FAN-109

AREA	PANEL NO	PLC NO	TYPE	IO TAG PRE-FIX	IO TAG	SERVICE	P&ID NO.	LOOP ID
COMPOST NO. 2	CP-100	PLC-100	ETH		COMP-FAN-109-MD	COMPOST FAN NO. 9 "RUN" COMMAND	PID-4	COMP-FAN-109
COMPOST NO. 2	CP-100	PLC-100	ETH		COMP-FAN-109-MN	COMPOST FAN NO. 9 "RUNNING" STATUS	PID-4	COMP-FAN-109
COMPOST NO. 2	CP-100	PLC-100	ETH		COMP-FAN-109-SC	COMPOST FAN NO. 9 SPEED COMMAND	PID-4	COMP-FAN-109
COMPOST NO. 2	CP-100	PLC-100	ETH		COMP-FAN-109-SI	COMPOST FAN NO. 9 SPEED INDICATION	PID-4	COMP-FAN-109
COMPOST NO. 2	CP-100	PLC-100	ETH		COMP-FAN-109-XF	COMPOST FAN NO. 9 "FAULT" STATUS	PID-4	COMP-FAN-109
COMPOST NO. 2	CP-100	PLC-100	ETH		COMP-FAN-110-CL	COMPOST FAN NO. 10 "IN REMOTE" STATUS	PID-4	COMP-FAN-110
COMPOST NO. 2	CP-100	PLC-100	ETH		COMP-FAN-110-MD	COMPOST FAN NO. 10 "RUN" COMMAND	PID-4	COMP-FAN-110
COMPOST NO. 2	CP-100	PLC-100	ETH		COMP-FAN-110-MN	COMPOST FAN NO. 10 "RUNNING" STATUS	PID-4	COMP-FAN-110
COMPOST NO. 2	CP-100	PLC-100	ETH		COMP-FAN-110-SC	COMPOST FAN NO. 10 SPEED COMMAND	PID-4	COMP-FAN-110
COMPOST NO. 2	CP-100	PLC-100	ETH		COMP-FAN-110-SI	COMPOST FAN NO. 10 SPEED INDICATION	PID-4	COMP-FAN-110
COMPOST NO. 2	CP-100	PLC-100	ETH		COMP-FAN-110-XF	COMPOST FAN NO. 10 "FAULT" STATUS	PID-4	COMP-FAN-110
COMPOST NO. 2	CP-100	PLC-100	ETH		COMP-FAN-111-CL	COMPOST FAN NO. 11 "IN REMOTE" STATUS	PID-4	COMP-FAN-111
COMPOST NO. 2	CP-100	PLC-100	ETH		COMP-FAN-111-MD	COMPOST FAN NO. 11 "RUN" COMMAND	PID-4	COMP-FAN-111
COMPOST NO. 2	CP-100	PLC-100	ETH		COMP-FAN-111-MN	COMPOST FAN NO. 11 "RUNNING" STATUS	PID-4	COMP-FAN-111
COMPOST NO. 2	CP-100	PLC-100	ETH		COMP-FAN-111-SC	COMPOST FAN NO. 11 SPEED COMMAND	PID-4	COMP-FAN-111
COMPOST NO. 2	CP-100	PLC-100	ETH		COMP-FAN-111-SI	COMPOST FAN NO. 11 SPEED INDICATION	PID-4	COMP-FAN-111
COMPOST NO. 2	CP-100	PLC-100	ETH		COMP-FAN-111-XF	COMPOST FAN NO. 11 "FAULT" STATUS	PID-4	COMP-FAN-111
COMPOST NO. 2	CP-100	PLC-100	ETH		COMP-FAN-112-CL	COMPOST FAN NO. 12 "IN REMOTE" STATUS	PID-4	COMP-FAN-112
COMPOST NO. 2	CP-100	PLC-100	ETH		COMP-FAN-112-MD	COMPOST FAN NO. 12 "RUN" COMMAND	PID-4	COMP-FAN-112
COMPOST NO. 2	CP-100	PLC-100	ETH		COMP-FAN-112-MN	COMPOST FAN NO. 12 "RUNNING" STATUS	PID-4	COMP-FAN-112
COMPOST NO. 2	CP-100	PLC-100	ETH		COMP-FAN-112-SC	COMPOST FAN NO. 12 SPEED COMMAND	PID-4	COMP-FAN-112
COMPOST NO. 2	CP-100	PLC-100	ETH		COMP-FAN-112-SI	COMPOST FAN NO. 12 SPEED INDICATION	PID-4	COMP-FAN-112
COMPOST NO. 2	CP-100	PLC-100	ETH		COMP-FAN-112-XF	COMPOST FAN NO. 12 "FAULT" STATUS	PID-4	COMP-FAN-112
COMPOST NO. 1	CP-100	PLC-100	DI		CP-100-XA101	PLC PANEL CP-100 UTILITY POWER OK" STATUS	PID-3	CP-100
COMPOST NO. 1	CP-100	PLC-100	DI		CP-100-XA102	PLC PANEL CP-100 "PANEL INTRUSION " STATUS	PID-3	CP-100
COMPOST NO. 1	CP-100	PLC-100	DI		CP-100-XA103	PLC PANEL CP-100 "MANAGED ETHERNET SWITCH 'FAULT'" STATUS	PID-3	CP-100
COMPOST NO. 1	CP-100	PLC-100	DI		CP-100-XA104	PLC PANEL CP-100 "24 VDC POWER SUPPLIES OK" STATUS	PID-3	CP-100
COMPOST NO. 1	CP-100	PLC-100	DI		CP-100-XA105	PLC PANEL CP-100 "UPS01 'FAULT'" STATUS	PID-3	CP-100
COMPOST NO. 1	CP-100	PLC-100	DI		CP-100-XA106	PLC PANEL CP-100 "UPS01 'BATTERY LOW'" STATUS	PID-3	CP-100
COMPOST NO. 1	CP-100	PLC-100	DI		CP-100-XA107	PLC PANEL CP-100 "UPS01 'UPS ON BYPASS'" STATUS	PID-3	CP-100
COMPOST NO. 1	CP-100	PLC-100	DI		CP-100-XA108	PLC PANEL CP-100 "POWER FAILURE FROM UPS" STATUS	PID-3	CP-100
COMPOST NO. 1	CP-100	PLC-100	DI		CP-100-TAH	PLC PANEL CP-100 HIGH TEMPERATURE ALARM	PID-3	CP-100
MAIN LIFT STATION	CP-100	PLC-100	DI		LSH101-LAH	MAIN LIFT STATION HIGH LEVEL ALARM	PID-4	LAH101
CONDENSATE LIFT STATION	CP-100	PLC-100	DI		LSH102-LAH	CONDENSATE LIFT STATION HIGH LEVEL ALARM	PID-4	LAH102
COMPOST NO. 1	CP-100	PLC-100	AI		PIT101-PI	PIT-101 PRESSURE	PID-3	PIT101
COMPOST NO. 2	CP-100	PLC-100	AI		PIT102-PI	PIT-102 PRESSURE	PID-4	PIT102
COMPOST NO. 1	CP-100	PLC-100	RF-ETH		TT101A1-TI	TT-101A1 TO PLC-100 "UPPER COMPOST TEMPERATURE" STATUS	PID-3	TT101A
COMPOST NO. 1	CP-100	PLC-100	RF-ETH		TT101A2-TI	TT-101A2 TO PLC-100 "LOWER COMPOST TEMPERATURE" STATUS	PID-3	TT101A
COMPOST NO. 1	CP-100	PLC-100	RF-ETH		TT101B1-TI	TT-101B1 TO PLC-100 "UPPER COMPOST TEMPERATURE" STATUS	PID-3	TT101B
COMPOST NO. 1	CP-100	PLC-100	RF-ETH		TT101B2-TI	TT-101B2 TO PLC-100 "LOWER COMPOST TEMPERATURE" STATUS	PID-3	TT101B
COMPOST NO. 1	CP-100	PLC-100	RF-ETH		TT101C1-TI	TT-101C1 TO PLC-100 "UPPER COMPOST TEMPERATURE" STATUS	PID-3	TT101C
COMPOST NO. 1	CP-100	PLC-100	RF-ETH		TT101C2-TI	TT-101C2 TO PLC-100 "LOWER COMPOST TEMPERATURE" STATUS	PID-3	TT101C
COMPOST NO. 1	CP-100	PLC-100	RF-ETH		TT102A1-TI	TT-102A1 TO PLC-100 "UPPER COMPOST TEMPERATURE" STATUS	PID-3	TT102A
COMPOST NO. 1	CP-100	PLC-100	RF-ETH		TT102A2-TI	TT-102A2 TO PLC-100 "LOWER COMPOST TEMPERATURE" STATUS	PID-3	TT102A
COMPOST NO. 1	CP-100	PLC-100	RF-ETH		TT102B1-TI	TT-102B1 TO PLC-100 "UPPER COMPOST TEMPERATURE" STATUS	PID-3	TT102B
COMPOST NO. 1	CP-100	PLC-100	RF-ETH		TT102B2-TI	TT-102B2 TO PLC-100 "LOWER COMPOST TEMPERATURE" STATUS	PID-3	TT102B
COMPOST NO. 1	CP-100	PLC-100	RF-ETH		TT102C1-TI	TT-102C1 TO PLC-100 "UPPER COMPOST TEMPERATURE" STATUS	PID-3	TT102C
COMPOST NO. 1	CP-100	PLC-100	RF-ETH		TT102C2-TI	TT-102C2 TO PLC-100 "LOWER COMPOST TEMPERATURE" STATUS	PID-3	TT102C
COMPOST NO. 1	CP-100	PLC-100	RF-ETH		TT103A1-TI	TT-103A1 TO PLC-100 "UPPER COMPOST TEMPERATURE" STATUS	PID-3	TT103A
COMPOST NO. 1	CP-100	PLC-100	RF-ETH		TT103A2-TI	TT-103A2 TO PLC-100 "LOWER COMPOST TEMPERATURE" STATUS	PID-3	TT103A
COMPOST NO. 1	CP-100	PLC-100	RF-ETH		TT103B1-TI	TT-103B1 TO PLC-100 "UPPER COMPOST TEMPERATURE" STATUS	PID-3	TT103B
COMPOST NO. 1	CP-100	PLC-100	RF-ETH		TT103B2-TI	TT-103B2 TO PLC-100 "LOWER COMPOST TEMPERATURE" STATUS	PID-3	TT103B
COMPOST NO. 1	CP-100	PLC-100	RF-ETH		TT103C1-TI	TT-103C1 TO PLC-100 "UPPER COMPOST TEMPERATURE" STATUS	PID-3	TT103C
COMPOST NO. 1	CP-100	PLC-100	RF-ETH		TT103C2-TI	TT-103C2 TO PLC-100 "LOWER COMPOST TEMPERATURE" STATUS	PID-3	TT103C
COMPOST NO. 1	CP-100	PLC-100	RF-ETH		TT104A1-TI	TT-104A1 TO PLC-100 "UPPER COMPOST TEMPERATURE" STATUS	PID-3	TT104A
COMPOST NO. 1	CP-100	PLC-100	RF-ETH		TT104A2-TI	TT-104A2 TO PLC-100 "LOWER COMPOST TEMPERATURE" STATUS	PID-3	TT104A
COMPOST NO. 1	CP-100	PLC-100	RF-ETH		TT104B1-TI	TT-104B1 TO PLC-100 "UPPER COMPOST TEMPERATURE" STATUS	PID-3	TT104B
COMPOST NO. 1	CP-100	PLC-100	RF-ETH		TT104B2-TI	TT-104B2 TO PLC-100 "LOWER COMPOST TEMPERATURE" STATUS	PID-3	TT104B
COMPOST NO. 1	CP-100	PLC-100	RF-ETH		TT104C1-TI	TT-104C1 TO PLC-100 "UPPER COMPOST TEMPERATURE" STATUS	PID-3	TT104C
COMPOST NO. 1	CP-100	PLC-100	RF-ETH		TT104C2-TI	TT-104C2 TO PLC-100 "LOWER COMPOST TEMPERATURE" STATUS	PID-3	TT104C
COMPOST NO. 1	CP-100	PLC-100	RF-ETH		TT105A1-TI	TT-105A1 TO PLC-100 "UPPER COMPOST TEMPERATURE" STATUS	PID-3	TT105A

AREA	PANEL NO	PLC NO	TYPE	IO TAG PRE-FIX	IO TAG	SERVICE	P&ID NO.	LOOP ID
COMPOST NO. 1	CP-100	PLC-100	RF-ETH		TT105A2-TI	TT-105A2 TO PLC-100 "LOWER COMPOST TEMPERATURE" STATUS	PID-3	TT105A
COMPOST NO. 1	CP-100	PLC-100	RF-ETH		TT105B1-TI	TT-105B1 TO PLC-100 "UPPER COMPOST TEMPERATURE" STATUS	PID-3	TT105B
COMPOST NO. 1	CP-100	PLC-100	RF-ETH		TT105B2-TI	TT-105B2 TO PLC-100 "LOWER COMPOST TEMPERATURE" STATUS	PID-3	TT105B
COMPOST NO. 1	CP-100	PLC-100	RF-ETH		TT105C1-TI	TT-105C1 TO PLC-100 "UPPER COMPOST TEMPERATURE" STATUS	PID-3	TT105C
COMPOST NO. 1	CP-100	PLC-100	RF-ETH		TT105C2-TI	TT-105C2 TO PLC-100 "LOWER COMPOST TEMPERATURE" STATUS	PID-3	TT105C
COMPOST NO. 1	CP-100	PLC-100	RF-ETH		TT106A1-TI	TT-106A1 TO PLC-100 "UPPER COMPOST TEMPERATURE" STATUS	PID-3	TT106A
COMPOST NO. 1	CP-100	PLC-100	RF-ETH		TT106A2-TI	TT-106A2 TO PLC-100 "LOWER COMPOST TEMPERATURE" STATUS	PID-3	TT106A
COMPOST NO. 1	CP-100	PLC-100	RF-ETH		TT106B1-TI	TT-106B1 TO PLC-100 "UPPER COMPOST TEMPERATURE" STATUS	PID-3	TT106B
COMPOST NO. 1	CP-100	PLC-100	RF-ETH		TT106B2-TI	TT-106B2 TO PLC-100 "LOWER COMPOST TEMPERATURE" STATUS	PID-3	TT106B
COMPOST NO. 1	CP-100	PLC-100	RF-ETH		TT106C1-TI	TT-106B1 TO PLC-100 "UPPER COMPOST TEMPERATURE" STATUS	PID-3	TT106C
COMPOST NO. 1	CP-100	PLC-100	RF-ETH		TT106C2-TI	TT-106B2 TO PLC-100 "LOWER COMPOST TEMPERATURE" STATUS	PID-3	TT106C
COMPOST NO. 2	CP-100	PLC-100	RF-ETH		TT107A1-TI	TT-107A1 TO PLC-100 "UPPER COMPOST TEMPERATURE" STATUS	PID-4	TT107A
COMPOST NO. 2	CP-100	PLC-100	RF-ETH		TT107A2-TI	TT-107A2 TO PLC-100 "LOWER COMPOST TEMPERATURE" STATUS	PID-4	TT107A
COMPOST NO. 2	CP-100	PLC-100	RF-ETH		TT107B1-TI	TT-107B1 TO PLC-100 "UPPER COMPOST TEMPERATURE" STATUS	PID-4	TT107B
COMPOST NO. 2	CP-100	PLC-100	RF-ETH		TT107B2-TI	TT-107B2 TO PLC-100 "LOWER COMPOST TEMPERATURE" STATUS	PID-4	TT107B
COMPOST NO. 2	CP-100	PLC-100	RF-ETH		TT107C1-TI	TT-107C1 TO PLC-100 "UPPER COMPOST TEMPERATURE" STATUS	PID-4	TT107C
COMPOST NO. 2	CP-100	PLC-100	RF-ETH		TT107C2-TI	TT-107C2 TO PLC-100 "LOWER COMPOST TEMPERATURE" STATUS	PID-4	TT107C
COMPOST NO. 2	CP-100	PLC-100	RF-ETH		TT108A1-TI	TT-108A1 TO PLC-100 "UPPER COMPOST TEMPERATURE" STATUS	PID-4	TT108A
COMPOST NO. 2	CP-100	PLC-100	RF-ETH		TT108A2-TI	TT-108A2 TO PLC-100 "LOWER COMPOST TEMPERATURE" STATUS	PID-4	TT108A
COMPOST NO. 2	CP-100	PLC-100	RF-ETH		TT108B1-TI	TT-108B1 TO PLC-100 "UPPER COMPOST TEMPERATURE" STATUS	PID-4	TT108B
COMPOST NO. 2	CP-100	PLC-100	RF-ETH		TT108B2-TI	TT-108B2 TO PLC-100 "LOWER COMPOST TEMPERATURE" STATUS	PID-4	TT108B
COMPOST NO. 2	CP-100	PLC-100	RF-ETH		TT108C1-TI	TT-108C1 TO PLC-100 "UPPER COMPOST TEMPERATURE" STATUS	PID-4	TT108C
COMPOST NO. 2	CP-100	PLC-100	RF-ETH		TT108C2-TI	TT-108C2 TO PLC-100 "LOWER COMPOST TEMPERATURE" STATUS	PID-4	TT108C
COMPOST NO. 2	CP-100	PLC-100	RF-ETH		TT109A1-TI	TT-109A1 TO PLC-100 "UPPER COMPOST TEMPERATURE" STATUS	PID-4	TT109A
COMPOST NO. 2	CP-100	PLC-100	RF-ETH		TT109A2-TI	TT-109A2 TO PLC-100 "LOWER COMPOST TEMPERATURE" STATUS	PID-4	TT109A
COMPOST NO. 2	CP-100	PLC-100	RF-ETH		TT109B1-TI	TT-109B1 TO PLC-100 "UPPER COMPOST TEMPERATURE" STATUS	PID-4	TT109B
COMPOST NO. 2	CP-100	PLC-100	RF-ETH		TT109B2-TI	TT-109B2 TO PLC-100 "LOWER COMPOST TEMPERATURE" STATUS	PID-4	TT109B
COMPOST NO. 2	CP-100	PLC-100	RF-ETH		TT109C1-TI	TT-109C1 TO PLC-100 "UPPER COMPOST TEMPERATURE" STATUS	PID-4	TT109C
COMPOST NO. 2	CP-100	PLC-100	RF-ETH		TT109C2-TI	TT-109C2 TO PLC-100 "LOWER COMPOST TEMPERATURE" STATUS	PID-4	TT109C
COMPOST NO. 2	CP-100	PLC-100	RF-ETH		TT110A1-TI	TT-110A1 TO PLC-100 "UPPER COMPOST TEMPERATURE" STATUS	PID-4	TT110A
COMPOST NO. 2	CP-100	PLC-100	RF-ETH		TT110A2-TI	TT-110A2 TO PLC-100 "LOWER COMPOST TEMPERATURE" STATUS	PID-4	TT110A
COMPOST NO. 2	CP-100	PLC-100	RF-ETH		TT110B1-TI	TT-110B1 TO PLC-100 "UPPER COMPOST TEMPERATURE" STATUS	PID-4	TT110B
COMPOST NO. 2	CP-100	PLC-100	RF-ETH		TT110B2-TI	TT-110B2 TO PLC-100 "LOWER COMPOST TEMPERATURE" STATUS	PID-4	TT110B
COMPOST NO. 2	CP-100	PLC-100	RF-ETH		TT110C1-TI	TT-110C1 TO PLC-100 "UPPER COMPOST TEMPERATURE" STATUS	PID-4	TT110C
COMPOST NO. 2	CP-100	PLC-100	RF-ETH		TT110C2-TI	TT-110C2 TO PLC-100 "LOWER COMPOST TEMPERATURE" STATUS	PID-4	TT110C
COMPOST NO. 2	CP-100	PLC-100	RF-ETH		TT111A1-TI	TT-111A1 TO PLC-100 "UPPER COMPOST TEMPERATURE" STATUS	PID-4	TT111A
COMPOST NO. 2	CP-100	PLC-100	RF-ETH		TT111A2-TI	TT-111A2 TO PLC-100 "LOWER COMPOST TEMPERATURE" STATUS	PID-4	TT111A
COMPOST NO. 2	CP-100	PLC-100	RF-ETH		TT111B1-TI	TT-111B1 TO PLC-100 "UPPER COMPOST TEMPERATURE" STATUS	PID-4	TT111B
COMPOST NO. 2	CP-100	PLC-100	RF-ETH		TT111B2-TI	TT-111B2 TO PLC-100 "LOWER COMPOST TEMPERATURE" STATUS	PID-4	TT111B
COMPOST NO. 2	CP-100	PLC-100	RF-ETH		TT111C1-TI	TT-111C1 TO PLC-100 "UPPER COMPOST TEMPERATURE" STATUS	PID-4	TT111C
COMPOST NO. 2	CP-100	PLC-100	RF-ETH		TT111C2-TI	TT-111C2 TO PLC-100 "LOWER COMPOST TEMPERATURE" STATUS	PID-4	TT111C
COMPOST NO. 2	CP-100	PLC-100	RF-ETH		TT112A1-TI	TT-112A1 TO PLC-100 "UPPER COMPOST TEMPERATURE" STATUS	PID-4	TT112A
COMPOST NO. 2	CP-100	PLC-100	RF-ETH		TT112A2-TI	TT-112A2 TO PLC-100 "LOWER COMPOST TEMPERATURE" STATUS	PID-4	TT112A
COMPOST NO. 2	CP-100	PLC-100	RF-ETH		TT112B1-TI	TT-112B1 TO PLC-100 "UPPER COMPOST TEMPERATURE" STATUS	PID-4	TT112B
COMPOST NO. 2	CP-100	PLC-100	RF-ETH		TT112B2-TI	TT-112B2 TO PLC-100 "LOWER COMPOST TEMPERATURE" STATUS	PID-4	TT112B
COMPOST NO. 2	CP-100	PLC-100	RF-ETH		TT112C1-TI	TT-112C1 TO PLC-100 "UPPER COMPOST TEMPERATURE" STATUS	PID-4	TT112C
COMPOST NO. 2	CP-100	PLC-100	RF-ETH		TT112C2-TI	TT-112C2 TO PLC-100 "LOWER COMPOST TEMPERATURE" STATUS	PID-4	TT112C
COMPOST NO. 1	CP-100	PLC-100	AI		TIT113-TI	TIT-113 TEMPERATURE	PID-3	TIT113
COMPOST NO. 2	CP-100	PLC-100	AI		TIT114-TI	TIT-114 TEMPERATURE	PID-4	TIT114

Control Panel Schedule

TAG NO.	DESCRIPTION	PANEL OPTIONS	SURGE SUPRESSION DETAIL	INSTALLATION DETAIL	PLC	P&ID	NOTES
CP-100	COMPOST AREA & BIOFILTER MASTER PLC	**TYPE:** Indoor **RATING:** 120VAC **DIMENSIONS:** 36"x36"x18"	N/A	N/A	PLC-100	PID-3 PID-4	d by PIC System su

SECTION 40 90 00 - SUPPLEMENT
PROCESS INSTRUMENTATION AND CONTROL SYSTEMS (PICS)
SAMPLE FORMS

JACOBS **SYSTEM PROBLEM REPORT**			
Project Name:		Project No.:	
Test Name:		SPR Number:	
Test Number:		Problem Status:	
Problem Type: Hardware Software Documentation Unknown Other			
SYMPTOMS:	Time:	Date:	By:
Description:			
		Can problem be reproduced at will? Y / N	
DIAGNOSIS:	Time:	Date:	By:
Description:			
CORRECTION:	Time:	Date:	By:
Description:			
FINAL SIGN OFF	Time:	Date:	By:

JACOBS
LOOP STATUS REPORT

Project Name:	Project No.

FUNCTIONAL REQUIREMENTS:

COMPONENT STATUS (Check and initial each item when complete)

Tag Number	Delivered	Tag ID Checked	Installation	Termination Wiring	Termination Tubing	Calibration	

REMARKS:

Loop Ready for Operation	By:	Date:	Loop No.:

JACOBS
INSTRUMENT CALIBRATION SHEET

COMPONENT	MANUFACTURER	PROJECT
Code:	Name:	Number:
Name:	Model:	Name:
	Serial #:	

FUNCTIONS

	RANGE	VALUE	UNITS	COMPUTING FUNCTIONS? Y / N	CONTROL? Y / N Action? direct / reverse Modes? P / I / D
Indicate? Y / N Record? Y / N	Chart:			Describe:	
	Scale:				SWITCH? Y / N Unit Range: Differential: fixed/adjustable Reset? automatic / manual
Transmit/ Convert? Y / N	Input:				
	Output:				

ANALOG CALIBRATIONS							DISCRETE CALIBRATIONS					Note.
REQUIRED			AS CALIBRATED				REQUIRED			AS CALIBRATED		No
Input	Indicated	Output	Increasing Input		Decreasing Input		Number	Trip Point	Reset Pt.	Trip Point	Reset Pt.	
			Indicated	Output	Indicated	Output		(note rising or falling)		(note rising or falling)		
							1.					
							2.					
							3.					
							4.					
							5.					
CONTROL MODE SETTINGS:			P:	I:	D:		6.					

#	NOTES:	Component Calibrated and Ready for Start-up
		By:
		Date:
		Tag No.:

JACOBS
I&C VALVE ADJUSTMENT SHEET

PARTS	Project Name:	Project Number:
Body	Type:	Mfr:
	Size:	Model:
	Line Connection:	Serial #:
Operator	Type:	Mfr:
	Action:	Model:
	Travel:	Serial #:
Positioner	Input Signal:	Mfr:
	Action:	Model:
	Cam:	Serial #:
Pilot Solenoid	Action:	Mfr:
	Rating:	Model:
		Serial #:
I/P Converter	Input:	Mfr:
	Output:	Model:
	Action:	Serial #:
Position Switch	Settings:	Mfr:
	Contacts:	Model:
		Serial #:
Power Supply	Type:	Air Set Mfr:
	Potential:	Model:
		Serial #:

ADJUSTMENTS	Initial	Date	**VERIFICATION**	Initial	Date
Air Set			Valve Action		
Positioner			Installation		
Position Switches			Wire Connection		
I/P Converter			Tube Connection		
Actual Speed					

REMARKS:	**Valve Ready for Start-up**
	By:
	Date:
	Tag No.:

JACOBS
PERFORMANCE TEST SHEET

Project Name:	Project No.:

Demonstration test(s): For each functional Requirement of the loop:
(a) List and number the requirement. (b) Briefly describe the demonstration test.
(c) Cite the results that will verify the required performance. (d) Provide space for signoff.

Forms/Sheets Verified	By	Date	**Loop Accepted By Owner**
Loop Status Report			By:
Instrument Calibration Sheet			Date:
I&C Valve Calibration Sheet			
Performance Test	By	Date	
Performed			
Witnessed			Loop No.:

SECTION 40 95 80
FIBER OPTIC COMMUNICATION SYSTEM

PART 1 GENERAL

1.01 REFERENCES

A. The following is a list of standards that may be referenced in this section:

1. Electronic Components, Assemblies, and Materials Association (ECA): 310-E, Cabinets, Racks, Panels, and Associated Equipment.
2. Institute of Electrical and Electronic Engineers, Inc. (IEEE): 802.3, Telecommunications and Information Exchange Between Systems—Local and Metropolitan Networks.
3. Insulated Cable Engineers Association (ICEA):
   a. S-83-596, Optical Fiber Premises Distribution Cable.
   b. S-87-640, Optical Fiber Outside Plant Communications Cable.
   c. S-104-696, Indoor-Outdoor Optical Fiber Cable.
4. International Organization for Standardization (ISO): 9001, Quality Management Systems—Requirements.
   a. International Telecommunication Union (ITU): T G.652, Characteristics of a Single-mode Optical Fibre and Cable.
5. National Fire Protection Association (NFPA): 70, National Electrical Code (NEC).
6. QuEST Forum (QF): TL 9000, Quality Management Systems.
7. Rural Development Utilities Programs (RDUP):
   a. 7 CFR 1755.902, Minimum Performance Specification for Fiber Optic Cables.
   b. 7 CFR 1755.903, Fiber Optic Service Entrance Cables.
8. Telecommunications Industry Association (TIA):
   a. 526-7, OFSTP-7 Measurement of Optical Power Loss of Installed Single-Mode Fiber Cable Plant.
   b. 526-14, OFSTP-14 Optical Power Loss Measurements of Installed Multimode Fiber Cable Plant.
   c. 568-C.1, Commercial Building Telecommunications Cabling Standards.
   d. 568-C.3, Optical Fiber Cabling Components Standard.
   e. 598, Optical Fiber Cable Color Coding.
   f. 606, Administration Standard for Commercial Telecommunications Infrastructure.
9. Telecommunications Industry Association/Electronics Industry Association (TIA/EIA):

a. 455-78, FOTP-78 - IEC 60793-1-40 Optical Fibers Part 1-40: Measurement Methods and Text Procedures – Attenuation.

b. 455-133, FOTP-133 IEC-60793-1-22 Optical Fibers Part 1-22: Measurement Methods and Test Procedures Length Measurement.

c. 492AAAA, Detail Specification for 62.5-Micrometer Core Diameter/125-Micrometer Cladding Diameter Class Ia Graded-Index Multimode Optical Fibers.

d. 492AAAB, Detail Specification for 50-Micrometer Core Diameter/125-Micrometer Cladding Diameter Class Ia Graded-Index Multimode Optical Fibers.

e. 492AAAC, Detail Specification for 850-nm Laser-Optimized, 50-um Core Diameter/125-um Cladding Diameter Class Ia Graded-Index Multimode Optical Fibers.

f. 492CAAA, Detail Specification for Class IVa Dispersion-Unshifted Single-Mode Optical Fibers.

g. 492CAAB, Detail Specification for Class IVa Dispersion-Unshifted Single-Mode Optical Fibers with Low Water Peak.

h. 604-2, FOCIS-2 Fiber Optic Connector Intermateability Standard, Type ST.

i. 604-3, FOCIS-3 Fiber Optic Connector Intermateability Standard, Type SC and SC-APC.

j. 604-12, FOCIS-12 Fiber Optic Connector Intermateability Standard, Type MT-RJ.

k. 942, Telecommunications Infrastructure Standard for Data Centers.

l. TSB-140, Additional Guidelines for Field-Testing Length, Loss and Polarity of Optical Fiber Cabling Systems-Contains Color.

10. Underwriter Laboratories (UL): 94, Tests for Flammability of Plastic Materials for Parts in Devices and Appliances.

1.02 DEFINITIONS

A. ATM: Asynchronous transfer mode.

B. AUI: Attachment unit interface.

C. dB: Decibel.

D. DNI: Desktop network interface.

E. EMB: Effective modal bandwidth.

F. ETL: Electrical test laboratories.

G. FDDI: Fiber distributed data interface.

H. FIM: Facilities information management.

I. Flux Budget: Difference between transmitter output power and receiver input power required for signal discrimination when both are expressed in dBm.

J. FOCS: Fiber optic communication system.

K. FOIRL: Fiber optic inter repeater link.

L. Fusion Splice: Connecting ends of two fibers together by aligning fiber ends and applying electric arc to fuse ends together.

M. Hybrid Cable: Cable containing more than one type of fiber.

N. LAN: Local area network.

O. LIMS: Laboratory information management system.

P. m: Micrometer.

Q. Mbps: Megabits per second.

R. Mechanical Splice: Connecting ends of two fibers together by means other than fusion.

S. Megahertz (MHz): One million cycles per second.

T. MHz: Megahertz.

U. micro: x 10^{-6}.

V. Micron: Micrometer or one millionth meter.

W. MIS: Management information system.

X. n, nano: x 10^{-9}.

Y. N: Newton.

Z. nm: Nanometer—unit of measure equal to one billionth meter.

AA. OFL: Over-filled launch.

BB. OFN: Nonconductive optical fiber cable.

CC. OFNP: Nonconductive optical fiber plenum cable.

DD. OFNR: Nonconductive optical fiber riser cable.

EE. OLTS: Optical loss test sets.

FF. OTDR: Optical time domain reflectometer.

GG. OVD: Outside vapor deposit.

HH. PIC: Process instrumentation and control.

II. Plenum: Air return path of central air handling system, such as open space above suspended ceiling.

JJ. RLM: Restricted mode launch.

KK. ROL: Reverse oscillation lay.

LL. SPC: Super physical contact.

MM. UPC: Ultra physical contact.

NN. UPS: Uninterruptible power supply.

OO. V ac: Volts alternating current.

PP. WAN : Wide area network.

1.03 SYSTEM DESCRIPTION

A. Function of FOCS is to EXTEND THE PLANT scada AND it NETWORKS TO THE NEW Compost Electrical Building.

B. Furnish and install new fiber optic cable as indicated on the Drawings. Run in conduit as shown on the drawings. Terminate all fibers (active and dark). The connectors shall be the SC type.

1.04 SUBMITTALS

A. Action Submittals:

1. Site Layout Diagram Showing:

a. Access holes, with identification.

b. Above grade cable routings, with pole and cable identification.

c. Below grade conduit routings between access holes and buildings, with conduit counts and identification.

d. Below grade innerduct routings through conduits, with innerduct counts and identification.

e. Cable routings through innerducts and to patch panels, fiber centers, or network nodes, with cable and node identification.

2. Cable Schedule Showing:

a. Cable identification.

b. Fiber counts for each cable and identification of used fiber pairs.

c. Cable length and attenuation, with two connector pairs and no splice, based on TIA 568-C.3, Annex H.

3. Component Data:

a. Manufacturer and model number.

b. General data and description.

c. Engineering specifications and data sheet.

d. Scaled drawings and mounting arrangements.

B. Informational Submittals:

1. Manufacturer’s statement that installer is certified to perform installation Work.

2. Subcontractor Qualifications:

a. FOCS Subcontractor: Minimum of 5 years’ experience providing, integrating, installing, and commissioning of similar systems.

1) Statement of Experience: List of at least three fiber optic data communications systems comparable to system specified which have been furnished and placed into operation. For each system, provide following information:

a) Owner's name, address, telephone number, and name of current operations supervisor or other contact.

b) Description of system hardware configuration, including major equipment items, number of nodes, and communication standards implemented.

c) System block diagram.

d) Dates when contract was signed, equipment was delivered, and system was accepted by Owner. Also, include originally scheduled completion date and if different from actual date, explain why.

e) Approximate value of listed FOCS provided in dollars.

f) Detailed horizontal and riser routing.

g) Distribution frame arrangements.

h) Fiber and termination identification, including spares.

b. FOCS Subcontractor's Site Representative: Minimum of 5 years' experience installing similar systems.

c. Qualification of Personnel:

1) Resumes identifying management and technical qualifications of supervisory, local service representative, and key personnel.

2) Qualification data of firm and persons to demonstrate capabilities and experience in the following areas:

a) Fiber optic cable handling and placement techniques.

b) Fiber optic splicing and installation of connections.

c) Attenuation testing procedures.

d. Owner acceptance of FOCS Subcontractor does not exempt FOCS Subcontractor or Contractor from meeting Contract Document requirements nor does it give prior acceptance of subsystems, equipment, materials, or services.

e. Sample of Network Test Report, minimum 10 pages that Contractor generated in a previous project.

f. Testing and acceptance plan, 30 days prior to beginning of testing.

g. Fiber test results. Documentation covering fiber facility testing, not later than 2 days after testing, showing:

1) Manufacturer's tag of attenuation per fiber as recorded from OTDR reading before shipment.

2) Attenuation of each fiber upon delivery to Site.

3) Attenuation of each fiber plus connector after installation as recorded from OTDR with tracing.

4) Flux Budget calculations with comparison to measured attenuation for each run verifying adequate optical signal strength.

h. For each maintenance organization, identify location of base of service and how required coverage will be achieved.

3. Manufacturer's Certificate of Compliance, in accordance with Section 01 43 33, Manufacturers' Field Services.

4. Manufacturers suggested installation practice.

5. Operation and Maintenance Data: As specified in Section 01 78 23, Operation and Maintenance Data.

1.05 ENVIRONMENTAL REQUIREMENTS

A. Optical Fiber Cable and Cable Splice Centers:

1. Outside, Underground/Submerged: Minus 20 to 40 degrees C.

2. Outside, Overhead: Minus 40 to 80 degrees C.

3. Outside, Aboveground in Conduit: Minus 40 to 80 degrees C.

4. Inside: 0 to 40 degrees C.

B. Equipment:

1. Outside, Aboveground: Minus 40 to 80 degrees C.

2. Control Rooms, Equipment Rooms, and Telecommunications Closets: 30 to 55 percent relative humidity, 18 to 24 degrees C.

3. Other Interior Areas: 0 percent to 100 percent relative humidity, 5 to 35 degrees C.

1.06 QUALITY ASSURANCE

A. Manufacturer Qualifications:

1. Cable:

a. ISO 9001 or QF TL 9000 registered, whichever applies to material.

b. Minimum of 20 years in manufacturing optical fiber cable in order to demonstrate reliable field performance.

2. Housing: ISO 9001 and QF TL 9000 registered.

3. Connector:

a. ISO 9001 or QF TL 9000 registered.

b. Minimum 10-year history of manufacturing and supporting connector technology that does not require epoxy or polishing in field.

4. Jumper Cable: ISO 9001 and QF TL 9000 registered.

B. Installer Qualifications:

1. Individuals with at least 3 years of experience with projects utilizing fiber optic cable in compliance with TIA 568-C.3.

2. Certified by fiber cable manufacturer.

C. Tester Qualifications: Individuals with at least 3 years of experience with projects utilizing fiber optic cable in compliance with TIA 568-C.3.

1. Technician: Successfully attended training program, which includes testing with an OLTS and an OTDR and have obtained a certificate as proof thereof. Certificate may have been issued by the following organizations or an equivalent organization:
    a. Manufacturer of fiber optic cable and fiber optic connectors.
    b. Manufacturer of test equipment used for field certification.
    c. Other independent training organizations acceptable to Owner.

D. Provide connectors/coupling, splicing enclosures, mounting hardware, and miscellaneous accessories for fibers by same manufacturer.

PART 2 PRODUCTS

2.01 MULTIMODE FIBER OPTIC CABLE

A. General:

1. Furnish and install for the SCADA network, 62.5 µm multimode graded index, buffered, optical glass fiber cores compatible with LED based transmission systems, OM1 rated, flame-retardant, non-corrosive/low smoke, zero-halogen material.
2. Provide a cable outer jacket that is UV inhibited, fungus resistant and flame retardant. Cable to be UL listed as type OFR-LS and suitable for indoor and outdoor use, duct or tray installation, above dropdown ceiling. Provide cable unaffected by continuous or intermittent submergence in water.
3. Fiber-Optic Cable shall be plenum-rated.
4. For multimode optical fibers attenuation rates shall be 3 dB/km or less at a wavelength of 850 nm and 1 dB/km or less at a wavelength of 1,300 nm. Bandwidth distance products shall be 220 MHz-km at a wavelength of 850 nm and 500 MHz-km at a wavelength of 1300 nm.
5. Do not use cable with plastic fiber core construction.

B. Fiber optic cable specifications:

1. Description Requirement:
    a. Central Element Dielectric Fiber Count 6-pair (12-strand)
    b. Fiber Type Multimode Fiber Category OM1 Fiber Code K Performance Option Code 30 Wavelengths 850 nm / 1300 nm.
    c. Minimum Distance Available 1,100 Meters Outer Jacket Material Plenum Rated. Must adhere to NFPA 262.
2. Maximum Short Term Tensile Load: 600 pounds.
3. Maximum Long Term Tensile Load: 180 pounds.
4. Outside Diameter: 0.44 inch (maximum).
5. Operating Temperature: Minus 40 to 158 degrees F.
6. Crush Resistance: 1200 pounds per inch.
7. Proof Test 100 kpsi.

2.02 PATCH CABLES

A. Provide all required patch cables for fiber connections necessary for a fully integrated and functional system. Provide pre-manufactured fiber patch cables with molded strain relief connections from Belkin, Blackbox, or approved equivalent.

B. Furnish two spare patch cables of each length furnished.

C. Patch cables shall use SC type connectors.

2.03 CONNECTOR PANELS (PATCH PANEL)

A. Provide fiber optic connectors panels for an efficient way to mate two connectors; type SC connection design.

1. Connector Specifications:

a. Insertion Loss (typical): Less than 0.3 dB.

b. Repeatability: Less than 0.2 dB.

c. Fiber Category: 62.5um MM (OM1).

d. Fiber Count: 6-pair (12-strand)

e. Operating Temperature: Minus 40 to plus 160 degrees F.

f. Body Material: Ceramic.

g. Connectors: SC.

2. Patch Panels shall be DIN rail Mounted Type.

2.04 TERMINAL CONNECTORS

A. Provide fiber optic connectors; type SC for connection to SC patch panel couplers and type SC for connection to Media Converters with ceramic or zirconia ferrule and strain relief boot.

1. Connector Specifications:

a. Insertion Loss (typical): Less than 0.3 dB.

b. Repeatability: Less than 0.2 dB.

c. Fiber Category: 62.5um MM (OM1).

d. Operating Temperature: Minus 40 to plus 167 degrees F.

B. Body Material: Nickel-plated brass, engineered high density plastic.

2.05 MULTICELL CONDUIT SYSTEM

A. Nonmetallic, designed for fiber optic cabling and telecommunications.

1. Features:

a. Outerduct, complete with innerducts preinstalled.

b. Innerduct identification system.

c. Gasketing that allows watertight assembly and disassembly of outer and innerducts for direct buried and encased installations.

d. Couplings, access hole terminators, innerduct seals for both empty and cabled ducts, and fixed and flexible bends.

2. Outerduct (conduit located outside innerduct):

a. Industry standard, 100-mm duct with integral bell end.

b. Material:

1) Underground: PVC.

2) Exposed: Aluminum.

c. Marking: Indicate proper innerduct orientation and alignment.

d. Length: 6 meters.

3. Innerduct:

a. Size and Count: As shown on Drawings.

b. Material: Smoothwall PVC.

c. Lubrication: Prelubricated with atomized silicone lubricant.

4. Manufacturer and Product: Carlon; Multi-Gard.

B. Innerduct:

1. Function: Installs into conduit system provided under Division 26, Electrical to provide smooth, low-friction path through conduit, with only one cable per path to facilitate changing individual cables.

2. Features:

a. Size and Count: As shown on Drawings.

b. Type: Annular, corrugated innerduct.

c. Material: HDPE.

d. Color Code: Orange, blue, green, brown, white, or grey.

e. Strength: Minimum 600-pound tensile strength, with no more than 5 percent ovalization at 600-pound tension.

f. Lubrication: Prelubricated.

3. Manufacturers:

a. Endocor.

b. Dura-Line.

2.06 CONDUIT

A. In accordance with Section 26 05 33, Raceway and Boxes.

2.07 ACCESSORIES

A. Hardware: Provide cable clamps, strain reliefs, blocking and grommet kits, closures, and fan outs for complete installation.

PART 3 EXECUTION

3.01 PREPARATION

A. Conduit:

1. Ensure installed conduit system conforms to fiber optic system requirements, including:
   a. Conduits and Innerducts: Size and number.
   b. Access Holes, Handholes, and Pull Boxes: Location and size, to ensure cables and innerducts may be installed without exceeding manufacturer's limitations.
   c. Outlet Boxes: Size to coordinate with outlet cover plates for adequate volume and bend radius.
2. Spare Conduit:
   a. No cables shall be pulled into spare conduit.
   b. 100 percent spare conduit capacity required for buried conduit only. For example, for every conduit with one or more cables in it, there shall be one spare equal-size conduit with no cables.
3. Expansion Plugs: Seal conduit to stop ingress of water and grit with fabricated expansion plugs.
4. Ensure duct bank, conduit, and other confined routing is free and clear of debris before cable placement.

B. Multicell Conduit System:

1. Cabled Innerducts: Seal cables into innerducts to stop ingress of water and grit with fabricated expansion seals that have separate seals for each cable.
2. Empty Innerducts: Seal empty innerducts immediately after installation to stop ingress of water and grit with fabricated expansion plugs. Remove plugs as required to install cables.

C. Innerduct:

1. In accordance with manufacturer's recommendations.
2. In all fiber optic conduits.
3. Install no more than one innerduct of each color in single conduit.
4. Terminate innerducts in conduit with fabricated termination kits.
5. Identify innerducts at both ends by methods such as color-coding or waterproof tags wired through innerduct wall.
6. Sealing:
   a. Cabled Innerducts: Seal cables into innerducts to stop ingress of water and grit with fabricated expansion seals that have separate seals for each cable.
   b. Innerduct to Conduit: Seal gaps between innerducts and conduit with sealing compound such as 3M Ductseal.

c. Empty Innerducts: After installation, seal with fabricated expansion plugs to stop ingress of water and grit. Remove plugs as required to install cables.

3.02 INSTALLATION

A. Fiber Optic Cable:

1. Specified fiber counts, routing, origination, and terminating points are indicated on Drawings.
2. Installation by manufacturer's certified installer.
3. Install cables in accordance with manufacturer's requirements.
4. Install cable directly from shipping reels. Ensure that cable is:
   a. Not dented, nicked, or kinked.
   b. Not subjected to pull stress greater than manufacturer's specification.
   c. Not bent to a radius below manufacturer's minimum bend radius.
   d. Not subjected to treatment that may damage fiber strands during installation.
5. Cables per Conduit or Innerduct: In accordance with NFPA 70 NEC conduit fill limitations.
6. If calculation indicates cable will attenuate signals more than 8 dB, reroute may be allowed if approved by Engineer.
7. Splices: Install fiber optic cables in unspliced lengths from fiber centers to switches or hubs.
8. Connector: Insertion loss on multimode connections exceeding 0.5 dB and 0.4 dB on single-mode connections not permitted.
9. Identification:
   a. Identify cable on both ends, in access holes, and pull points.
   b. In accordance with TIA 606.
10. Arrange cable, equipment, and hardware to provide neat appearance and accessibility for servicing.
11. Access Holes:
   a. Provide supports for cables in access and handholes as shown on Drawings.
   b. While maintaining minimum bend radius, lace cables neatly to supports to keep them out of way of personnel.

B. Fiber Center, Fiber Distribution Frame, Housing, Panel, Splice Tray: Install securely in field panels or enclosures as shown on Drawings.

C. Cable Terminations:

1. In accordance with TIA 568-C.3.
2. Fan out fiber cable to allow direct connectorization of connectors.
   a. Sleeve over individual fibers with transparent furcation tubes.

b. At point of convergence of furcation tubes, provide strain relief with metal or high density plastic fan-out collar.

3. Break-out Kits:

a. Terminate cables using manufacturer-supplied break-out kits.

b. Terminate in accordance with manufacturer's recommendations.

4. Slack:

a. Fiber Centers, Hubs, and Switches: Minimum, 3-meter slack fiber at each end, coiled neatly in cable management equipment.

b. Communications Management Outlets: Minimum, 1-meter slack fiber, coiled neatly in outlet box.

5. Connectors:

a. Terminate 100 percent fibers in each cable to specified connector.

b. Connect into fiber management system.

D. Conduit: Install in accordance with Section 26 05 33, Raceway and Boxes.

3.03 FIELD QUALITY CONTROL

A. General:

1. Advise Engineer at least 48 hours in advance of each test. Engineer shall have option to witness and participate actively in tests.

2. In accordance with Section 01 91 14, Equipment Testing and Facility Startup.

3. Provide equipment, instrumentation, supplies, and skilled staff necessary to perform testing.

4. Outlets, cables, patch panels, and associated components shall be fully assembled and labeled prior to field testing.

5. Testing performed on incomplete systems shall be redone on completion of the Work.

6. Document Test Results: Confirm each cable has at least specified number of fibers that meet standards, in accordance with As-Built Fiber Optic Cable Installation form included as Supplement to this section.

7. Confirm quantities and sizes of conduit and innerduct, in accordance with As-Built Conduit/Innerduct Installation form included as Supplement to this section.

B. Test Equipment:

1. Field test instruments shall have latest software and firmware installed.

2. Optical Fiber Cable Testers:

a. Field test instrument shall be within calibration period recommended by manufacturer.

b. Optical Loss Test Set (OLTS):

1) Single-mode Optical Fiber Light Source:

a) Provide dual laser light sources with central wavelengths of 1,310 nm (plus or minus 20 nm) and 1,550 nm (plus or minus 20 nm).

b) Output Power: Minus 10 dBm, minimum.

c) Manufacturer: Fluke Networks.

2) Multimode Optical Fiber Light Source:

a) Provide dual LED light sources with central wavelengths of 850 nm (plus or minus 30 nm) and 1,300 nm (plus or minus 20 nm).

b) Output Power: Minus 20 dBm minimum.

c) Meet launch requirements of TIA/EIA 455-78. This launch condition can be achieved either within the field test equipment or by use of an external mandrel wrap, as described in Clause 11 of TIA 568-C.3, with Category 1 light source.

d) Manufacturer: Fluke Networks.

3) Power Meter:

a) Provide 850 nm, 1,300/1,310 nm, and 1,550 nm wavelength test capability.

b) Power Measurement Uncertainty: Plus or minus 0.25 dB.

c) Store reference power measurement.

d) Save at least 100 results in internal memory.

e) PC interface (serial or USB).

f) Manufacturer: Fluke Networks.

4) Optional Length Measurement: Capable of measuring optical length of fiber using time-of-flight techniques.

3. Optical Time Domain Reflectometer (OTDR):

a. Bright, color transmissive LCD display with backlight.

b. Rechargeable for 8 hours of normal operation.

c. Weight with battery and module of not more than 4.5 pounds and volume of not more 200 cubic inches.

d. Internal nonvolatile memory and removable memory device with at least 16 MB capacity for results storage.

e. Serial and USB ports to transfer data to PC.

f. Single-mode OTDR:

1) Wavelengths: 1,310 nm (plus or minus 20 nm) and 1,550 nm (plus or minus 20 nm).

2) Event Dead Zone: 2 meters maximum at 1,310 nm and 2 meters maximum at 1,550 nm.

3) Attenuation Dead Zone: 15 meters maximum at 1,310 nm and 15 meters maximum at 1,550 nm.

4) Distance Range: Minimum 10,000 meters.

5) Dynamic Range: Minimum 10 dB at 1,310 nm and 1,550 nm.

g. Multimode OTDR:

1) Wavelengths: 850 nm (plus or minus 20 nm) and 1,300 nm (plus or minus 20 nm).

2) Event Dead Zone: 1 meter maximum at 850 nm and 2 meters maximum at 1,300 nm.

3) Attenuation Dead Zone: 6 meters maximum at 850 nm and 15 meters maximum at 1,300 nm.

4) Distance Range: 2,000 meters minimum.

5) Dynamic Range: Minimum 10 dB at 850 nm and 1,300 nm.

h. Manufacturer: Fluke Networks.

4. Fiber Microscope:

a. Magnification: 250X or 400X for end-face inspection.

b. Manufacturer: Fluke Networks.

5. Integrated OLTS, OTDR, and Fiber Microscope:

a. Test equipment that combines into one instrument such as OLTS, OTDR, and fiber microscope may be used.

b. Manufacturer: Fluke Networks.

C. Conduit Test:

1. Test and seal spare conduits.

2. Conduit and Innerduct Testing:

a. Blow full-diameter mouse through each spare conduit and innerduct to verify they are unrestricted over full length.

b. If conduit is restricted over full length, advise Engineer.

3. Documentation: Confirm conduit test As-Built Conduit/Innerduct Installation form documentation includes details of innerducts.

D. Cable Testing:

1. Test procedures and field test instruments shall comply with applicable requirements of:

a. LIA Z136.2.

b. TIA/EIA 455-78.

c. TIA/EAI 455-133.

d. TIA 526-7.

e. TIA 526-14.

f. TIA 568-C.1.

g. TIA 568-C.3.

h. TIA TSB 140.

2. Test attenuation and polarity of installed cable plant with OLTS and installed condition of cabling system and its components with OTDR.

3. Verify condition of fiber end face.

4. Perform on each cabling link (connector to connector).

5. Perform on each cabling channel (equipment to equipment).

6. Do not include active devices or passive devices within link or channel other than cable, connectors, and splices. For example, link attenuation does not include such devices as optical bypass switches, couplers, repeaters, or optical amplifiers.

7. Test each fiber optic cable on the reel prior to use.

8. Test each fiber optic cable after the cable has been installed.

9. If the installed test does not equal or exceed the results of the reel test, the cable shall not be suitable for use on the Project and new cable shall need to be pulled.

10. Furnish documentation for each test listed (as defined within the Specifications) to both the Owner and the Engineer.

11. Document Tests:

a. OLTS dual wavelength attenuation measurements for single-mode and multimode links and channels.

b. OTDR traces and event tables for single-mode and multimode links and channels.

E. Fiber Testing Parameters:

1. Each cabling link shall be in compliance with the following test limits:

a. Optical Loss Testing:

1) Backbone (single-mode and multimode) Link:

a) Calculate link attenuation by the formulas specified in TIA 568-C.1.

b) Values for Attenuation Coefficient (dB/km) are listed in the table below:

Attenuation Coefficient				
Type of Optical Fiber	Wavelength (nm)	Attenuation Coefficient (dB/km)	Wavelength (nm)	Attenuation Coefficient (dB/km)
Single-mode (Inside plant)	1310	1.0	1550	1.0
Single-mode (Outside plant)	1310	0.5	1550	0.5

Attenuation Coefficient				
Type of Optical Fiber	Wavelength (nm)	Attenuation Coefficient (dB/km)	Wavelength (nm)	Attenuation Coefficient (dB/km)
Multimode 62.5/125 µm	850	3.5	1300	1.5
Multimode 50/125 µm	850	3.5	1300	1.5

b. OTDR Testing:

1) Reflective Events: Maximum 0.75 dB.

2) Nonreflective Events: Maximum 0.3 dB.

c. Magnified Endface Inspection:

1) Visually inspect fiber connections for end-face quality.

2) Scratched, pitted, or dirty connectors shall be diagnosed and corrected.

F. Diagnosis and Correction:

1. Installed cabling links and channels shall be field tested and pass test requirements and analysis as described herein.

2. Link or channel that fails these requirements shall be diagnosed and corrected.

3. Document corrective action and follow with new test to prove corrected link or channel meets performance requirements.

4. Provide final and passing result of tests for links and channels.

G. Acceptance: Acceptance of test results shall be given in writing after Project is tested and completed in accordance with Contract Documents and satisfaction of Owner.

H. Test Execution:

1. Optical Fiber Cable Testing:

a. Tests performed that use laser or LED in test set shall be carried out with safety precautions in accordance with LIA Z136.2.

b. Link and channel test results from OLTS and OTDR shall be recorded in test instrument upon completion of each test for subsequent uploading to a PC in which administrative documentation may be generated.

1) Record end-face images in memory of test instrument for subsequent uploading to a PC and reporting.

c. Perform Testing:

1) On each cabling segment (connector to connector).

2) On each cabling channel (equipment to equipment).

3) Using high-quality test cords of same fiber type as cabling under test.

a) Test cords for OLTS testing shall be between 1 meter and 5 meters in length.

b) Test cords for OTDR testing shall be approximately 100 meter for launch cable and at least 25 meters for receive cable.

2. Optical Loss Testing (OLTS):

   a. Backbone Link:

      1) Test single-mode at 1,310 nm and 1,550 nm in accordance with TIA 526-7, Method A.1, One Reference Jumper or equivalent method.

      2) Test multimode at 850 nm and 1,300 nm in accordance with TIA 526-14A, Method B, One Reference Jumper or equivalent method.

      3) Perform tests in both directions.

3. OTDR Testing:

   a. Test backbone, horizontal, and centralized links at appropriate operating wavelengths for anomalies and to ensure uniformity of cable attenuation and connector insertion loss.

      1) Single-mode: 1,310 nm and 1,550 nm.

      2) Multimode: 850 nm and 1,300 nm.

   b. Test each fiber link and channel in both directions.

   c. Install launch cable between OTDR and first link connection.

   d. Install receive cable after last link connection.

4. Length Measurement:

   a. Record length of each fiber.

   b. Measure optical length using OLTS or OTDR.

5. Polarity Testing:

   a. Test paired duplex fibers in multifiber cables to verify polarity in accordance with subclause 10.3 of TIA/EIA 568-C.1.

   b. Verify polarity of paired duplex fibers using OLTS.

6. Test Results Documentation:

   a. Test results saved within field-test instrument shall be transferred into Windows-based database utility that allows for maintenance, inspection, and archiving of test records. These test records shall be uploaded to the PC unaltered. For example, “as saved in the field-test instrument.” The file format, CSV (comma separated value), does not provide adequate protection of these records and shall not be used.

   b. Available for inspection by Owner or Owner’s representative during installation period. Submit within 5 working days of completion of tests on cabling served by a telecommunications room or of backbone cabling.

   c. Database for project, including twisted-pair copper cabling links, if applicable, shall be stored and delivered on CD-ROM prior to Owner acceptance of

building. CD-ROM shall include software tools required to view, inspect, and print test reports.

d. Circuit IDs reported by test instrument shall match specified label identification.

e. Provide in electronic database for each tested optical fiber with the following information:

1) Identification of Site.

2) Name of test limit selected to execute stored test results.

3) Name of personnel performing test.

4) Date and time test results were saved in memory of tester.

5) Manufacturer, model, and serial number of field test instrument.

6) Version of test software and version of test limit database held within test instrument.

7) Fiber identification number.

8) Length for Each Optical Fiber: Optionally the index of refraction used for length calculation when using a length capable OLTS.

9) Test results to include OLTS attenuation link and channel measurements at appropriate wavelength and margin; difference between measured attenuation and test limit value.

10) Test results to include OTDR link and channel traces, and event tables at appropriate wavelength.

11) Length for each optical fiber as calculated by the OTDR.

12) Overall pass/fail evaluation of link-under-test for OLTS and OTDR measurements.

I. Drawings:

1. Record Copy: Provide at end of Project on CD-ROM.

a. CAD format and include notations reflecting as-built conditions of additions and variations from Drawings provided, such as to cable path and termination point.

b. CAD drawings are to incorporate test data imported from test instruments.

2. As-built Drawings:

a. Include, but not limited to block diagrams, frame and cable labeling, cable termination points, equipment room layouts, and frame installation details.

b. Include field changes made up to construction completion:

1) Field directed changes to pull schedule.

2) Field directed changes to cross connect and patching schedule.

3) Horizontal cable routing changes.

4) Backbone cable routing or location changes.

5) Associated detail drawings.

3.04 SUPPLEMENTS

A. Supplements listed below, following “End of Section,” are part of this Specification.

1. As-Built Fiber Optic Cable Installation Form.
2. As-Built Conduit/Innerduct Installation Form.

END OF SECTION 40 95 80

PROJECT: Missoula Garden City Compost Facility Improvements Project

Contractor: _____

Signed by: _____

AS-BUILT FIBER OPTIC CABLE INSTALLATION

Sheet 1 of 2

Cable Identification:
Routing: From: In:
(Identify field panel, control room, etc. in building)

Through: 1
(Identify access hole, building, gallery, etc.)
Through: 2 Through: 5
Through: 3 Through: 6
Through: 4 Through: 7
To: In:
See As-Built Conduit/Innerduct Installation forms for identification of conduits/innerducts cable is routed through.

Acceptable Attenuation:
Multimode Fibers

			cable length*
850 nm:	3.5 dB/km x	km + 1.5 dB =	dB
1300 nm:	1.0 dB/km x	km + 1.5 dB =	dB

*Contractor to provide actual length installed, within ±0.1 km.

Fiber ID	Use/Spare	Measured Attenuation (dB)			
		Hub-to-Node		Node-to-Hub	
		850 nm	1,300 nm	850 nm	1,300 nm

Sheet 2 of 2

PROJECT: Missoula Garden City Compost Facility Improvements Project

Contractor: _____

Signed by: _____

AS-BUILT CONDUIT/INNERDUCT INSTALLATION

From: To:

(Identify building, access hole, field panel, etc.) Sheet 1 of 1

Conduits:
Used: 4 inches; 2 inches
Spare: 4 inches; 2 inches Confirm all spares unrestricted: Yes/No
(Provide number of conduits in each category)

Innerducts:

Conduit ID*	Innerduct ID	Cable ID / Spare

(Continued overleaf delete if not applicable)

*Provide conduit ID if required to identify innerduct uniquely in the access hole, if for example, color-coded innerduct is used in more than one conduit. If innerducts are tagged uniquely, leave this column blank.

END OF SUPPLEMENT

DIVISION 43

PROCESS GAS & LIQUID HANDLING

SECTION 43 11 19
CENTRIFUGAL FANS & BLOWERS

PART 1 - GENERAL

1.01 REFERENCES

A. The following is a list of standards which may be referenced in this section:

1. Acoustical Society of America (ASA): S2.19, Mechanical Vibration-Balance Quality Requirements of Rigid Rotors-Part 1, Determination of Permissible Residual Unbalance.
2. Air-Conditioning and Refrigeration Institute (ARI).
3. Air Movement and Control Association International (AMCA):
   a. 99, Standards Handbook.
   b. 201, Fans and Systems.
   c. 203, Field Performance Measurement of Fan Systems.
   d. 210, Laboratory Methods of Testing Fans for Aerodynamic Performance Rating.
   e. 300, Reverberant Room Method for Sound Testing of Fans.
   f. 301, Methods for Calculating Fan Sound Ratings from Laboratory Test Data.
4. American Bearing Manufacturers Association (ABMA): 9, Load Ratings and Fatigue Life for Ball Bearings.
5. American Society of Heating, Refrigerating, and Air-Conditioning Engineers (ASHRAE): HVAC Applications Manual.
6. ASTM International (ASTM):
   a. B117, Standard Practice for Operating Salt Spray (Fog) Apparatus.
   b. D2247, Standard Practice for Testing Water Resistance of Coatings in 100% Relative Humidity.
   c. D2794, Standard Test Method for Resistance of Organic Coatings to the Effects of Rapid Deformation (Impact).
   d. D3363, Standard Test Method for Film Hardness by Pencil Test.
   e. D4167, Standard Specification for Fiber-Reinforced Plastic Fans and Blowers.
   f. E84, Standard Test Method for Surface Burning Characteristics of Building Materials.
7. National Electrical Manufacturers Association (NEMA): MG 1, Motors and Generators.
8. National Fire Protection Association (NFPA): 45, Fire Protection for Laboratories Using Chemicals.

9. Occupational Safety and Health Act (OSHA).
10. Society for Protective Coatings (SSPC):
    a. SP 3, Power Tool Cleaning.
    b. SP 5, Joint Surface Preparation Standard White Metal Blast Cleaning.
    c. SP 6, Joint Surface Preparation Standard Commercial Blast Cleaning.
    d. SP I0, Joint Surface Preparation Standard Near-White Blast Cleaning.
11. Underwriters Laboratories Inc. (UL): 507, Electric Fans.

1.02 DEFINITIONS

A. The following is a list of abbreviations which may be used in this Section:

1.	AC:	Alternating Current
2.	Bio-Fan or BF:	Biofilter Fan
3.	CISD:	Chemical Industry, Severe-Duty
4.	Comp Fan or CF:	Compost Fan
5.	Cure Fan or CUF:	Curing Fan
6.	dB:	Decibel
7.	DWDI:	Double Width, Double Inlet
8.	FRP:	Fiberglass Reinforced Plastic
9.	hp:	Horsepower
10.	ODP:	Open Drip Proof
11.	SWSI:	Single Width, Single Inlet
12.	TEFC:	Totally Enclosed, Fan Cooled
13.	UV:	Ultraviolet
14.	XP:	Explosion Proof

1.03 SUBMITTALS

A. Action Submittals
1. Provide for all products specified, as follows:
    a. Identification as referenced in Contract Documents.
    b. Manufacturer's name and model number.
    c. Descriptive specifications, literature and drawings.

d. Dimensions and weights.

e. Fan sound power level data (reference IO to power minus 12 Watts) at design operating point.

f. Fan Curves:

1) Performance Curves Indicating:

a) Relationship of flow rate to static pressure for various fan speeds.

b) Brake horsepower curves.

c) Acceptable selection range (surge curves, maximum revolutions per minute, etc).

d) Static pressure, capacity, horsepower demand and overall efficiency required at the duty point, including drive losses.

e) Fan wheel revolutions per minute and tip speed.

2) For variable air volume applications, indicate operating points at 100, 80, 60 and 40 percent of design capacity on fan curves including data to indicate effect of capacity control devices such as inlet vanes on flow, pressure and brake horsepower.

g. Capacities and ratings.

h. Construction materials.

i. Fan type, size, class, drive arrangement, discharge, rotation, and bearings.

j. Wheel type, diameter, revolutions per minute, and tip speed.

k. Motor data.

l. Power and control wiring diagrams, including terminals and numbers.

m. Vibration isolation.

n. Factory finish system.

o. Color selection charts where applicable.

p. Corrosion protection coating product data.

2. "Or Equal" Equipment:

a. Where submitted equipment results in change to fan inlet or outlet ductwork configuration shown on Drawings, submit system effect factor calculations indicating increased static pressure requirements as described in AMCA 201.

b. Where submitted equipment results in change to ductwork and equipment configuration shown on Drawings, submit detailed information on structural, mechanical, electrical, or other modifications necessary to adapt arrangement to equipment furnished.

B. Informational Submittals:

1. Recommended procedures for protection and handling of products prior to installation.

2. Manufacturer's installation instructions.

3. Manufacturer's Certificate of Compliance in accordance with Section 01640, Manufacturers' Services, for the following:

a. Motors specified to be premium efficient type.

b. Fans.

4. Factory Test reports: Factory run test, dynamic balancing, performance test, sound test, and vibration test.

5. Operation and maintenance data in conformance with Section 01430, Operation and Maintenance Data. Include as-built version of equipment schedules.

6. Support and anchorage calculations stamped by an Engineer licensed in the State of Montana. Anchorage, bracing and support design criteria and calculations shall conform to the manufacturer’s requirements as well as design criteria indicated on the Structural General Notes on the Drawings and any other referenced standards.

1.04 QUALITY ASSURANCE

A. Performance Ratings: Tested in accordance with AMCA 210.

B. Sound Ratings: Tested in accordance with AMCA 300.

C. Fabrication: In accordance with AMCA 99.

1.05 EXTRA MATERIALS

A. Furnish, tag, and box for shipment and storage the following materials:

Item	Quantity
Fan Shaft Seal	One per fan size
V-Belts	One complete set per fan
Special tools required	One complete set

B. Delivery: In accordance with Section 01600, Material and Equipment.

PART 2 - PRODUCTS

2.01 EQUIPMENT SCHEDULES

A. Some specific equipment requirements are listed in Equipment Schedules. Refer to

Drawings.

2.02 SPARK RESISTANT CONSTRUCTION

A. Fans required to be spark resistant shall comply with requirements of AMCA 99-0401.

2.03 PERFORMANCE REQUIREMENTS

A. Fan shall operate at single stable point as indicated by fan curve. Fans having two potential operating points on a single rpm curve are not acceptable. Duty point shall be at least 10 percent below the crest of the fan curve.

B. Fan shall operate at a speed not greater than 90 percent of the maximum safe speed at selected design point.

C. Fan and motor combination shall be capable of operating at 105 percent of Supplier's selected speed at design point. Motor shall not operate into motor service factor over the published range of flow at this higher speed.

D. Where inlet box is used, provide fan curves inclusive of inlet box losses.

E. Where inlet vane dampers are used, provide fan curves inclusive of inlet vane damper losses.

2.04 NAMEPLATES

A. All units shall include factory installed permanently attached nameplate displaying unit model and serial number.

2.05 OPERATING LIMITS

A. Fans designated to meet a specified fan class shall comply with requirements of AMCA 99-2408-69.

2.06 ACOUSTICAL LEVELS

A. Equipment selections shall produce sound power levels in each octave band no greater than shown in Equipment Schedule.

2.07 BIOFILTER FAN DRIVES

A. Furnish multiple drive belts where motor horsepower is 2 hp or larger.

B. Drive assembly shall be sized for a minimum 140 percent of fan motor horsepower rating.

C. Sheaves shall be capable of providing 150 percent of motor horsepower.

D. Fan Shafts: First critical speed of at least 125 percent of fan maximum operating speed.

E. Belts: Oil and heat resistant, nonstatic type.

F. Furnish motors for V-belt drives with adjustable rails or bases.

G. Unless otherwise noted, furnish belt-driven fans with cast iron or flanged steel sheaves.

H. Motors 20 hp or Smaller:

1. Variable pitch V-belt sheaves allowing at least 20 percent speed variation.
2. Final operating point shall be at approximate sheave midpoint.

I. Motors Larger than 20 hp: Fixed-pitch sheaves.

J. Drive Adjustment:

1. When fixed-pitch sheaves are furnished, accomplish system air balancing by either trial of different fixed-pitch sheaves or use of temporary adjustable-pitch sheaves.
2. Provide trial and final sheaves, as well as drive belts, as required.

K. Weather Cover: For outdoor applications, factory fabricated drive assembly of same material as fan housing, unless specified otherwise.

L. Belt and Shaft Guards:

1. Easily removable and to enclose entire drive assembly, meeting federal and OSHA requirements.
2. Guard faces of expanded metal having minimum 60 percent free area for ventilation.
3. Bright yellow finish.

M. Provide speed test openings at shaft locations.

2.08 FINISHES

A. Carbon Steel Parts: Factory finish as follows, unless indicated otherwise.

1. Parts cleaned and chemically pretreated with a phosphatizing process.
2. Alkyd enamel primer.
3. Air-dry enamel topcoat.

B. Aluminum Parts: Finished smooth and left unpainted, unless stated otherwise.

Stainless Steel Parts: Finished smooth and left unpainted.

2.09 COMPOST FAN, CENTRIFUGAL (CF-101 THROUGH CF-112)

A. General:

1. Factory-assembled utility blower; including housing, fan wheel, drive assembly, motor, and accessories.
2. Suitable to convey air at temperatures up to 200 degrees F.
3. Fan Performance: AMCA 99-2408 Class as scheduled.
4. Bearing AMCA Certified Ratings Seal for sound and air performance.

B. Housing:

1. Material: Aluminum.
2. Construction:

a. Curved scroll configuration, with continuous seam welding and side angle reinforcement.

b. Lifting lugs welded to housing.

c. Flanged and drilled outlet to permit duct connection.

d. Drain connection located at lowest point of fan housing.

e. Inlet: Spun-formed aerodynamic bell mouth.

3. Base/Pedestal: All-welded heavy gauge Type 316 stainless steel.

C. Wheel:

1. Centrifugal, one-piece, non-overloading, radial blade type.

2. Material: Aluminum.

3. Attached to fan shaft with split taper lock bushing.

D. Shaft, Bearings, Drive:

1. Shafts:

a. Turned, ground and polished steel.

b. Ends drilled and countersunk for tachometer readings.

c. Keyed for sheave installation.

2. Bearings:

a. Grease lubricated, precision antifriction ball, self-aligning type.

b. Mounted in cast iron pillow block housing.

c. Selected for average life (ABMA 9 Lso) of not less than 200,000 hours operation at maximum cataloged operating speed.

3. Drives:

a. In accordance with Article Fan Drives.

b. Factory set to specified fan revolutions per minute.

c. Type: Direct.

d. Arrangement: Arrangement 4.

E. Accessories: Provide as scheduled in Equipment Schedule and as follows:

1. Housing Access Doors: Bolted and gasketed.

2. Flanged Inlet: Heavy gauge construction, factory drilled and flanged.

3. Shaft Seal: Viton construction, located at shaft penetration of housing.

4. Shaft and Bearing Guard: Sheet metal construction same material as fan housing, for complete coverage of shaft and bearings.

5. Motor and Drive Cover:
    a. Factory fabricated, OSHA type.
    b. Sheet metal construction, same material as fan housing.
    c. Vented, openings sufficient size for proper motor cooling.
6. Unitary Subbase:
    a. Structural metal subbase, same material as fan housing.
    b. Bolted to bottom of fan base/pedestal.
    c. Drilled for field installation of vibration isolators.
7. Spark Resistant Construction Classification: AMCA 99-0401 Type B.
8. Corrosion Protection Coating:
    a. Provide factory-applied corrosion protection coating on these fan components:
        1) Wheel (or propeller).
        2) Housing.
        3) Accessories.
        4) Interior surfaces in contact with airstream.
    b. Coating system shall be baked epoxy phenolic, and shall be in accordance with Article Corrosion Protection Coating.

F. Manufacturers and Products:
1. New York Blower.
2. Aerovent.
3. Hartzell.

2.10 BIOFILTER FAN, CENTRIFUGAL SWSI (BF-101, BF-102)

A. General:
1. Factory-assembled utility blower; including housing, fan wheel, drive assembly, motor, and accessories.
2. Suitable to convey air at temperatures up to 250 degrees F.
3. Fan Performance: AMCA 99-2408 Class III.
4. Bearing AMCA Certified Ratings Seal for sound and air performance.

B. Housing:
1. Material: Aluminum or Type 304 stainless steel
2. Construction:
    a. Curved scroll configuration, with continuous seam welding and side angle

reinforcement.

b. Lifting lugs welded to housing.

c. Drain connection located at lowest point of fan housing.

d. Inlet/Outlet: Flanged and drilled to permit duct connection as shown on Drawings.

3. Base/Pedestal: All welded heavy gauge Type 316 stainless steel.

C. Wheel:

1. Centrifugal, one-piece, non-overloading, blade type as scheduled.

2. Material: Aluminum or Type 304 stainless steel

3. Attached to fan shaft with split taper lock bushing.

D. Shaft, Bearings, Drive:

1. Shafts:

a. Turned, ground and polished steel.

b. Ends drilled and countersunk for tachometer readings.

c. Keyed for sheave installation.

2. Bearings:

a. Grease lubricated, precision antifriction ball, self-aligning type.

b. Mounted in cast iron pillow block housing.

c. Selected for average life (ABMA 9 L_{50}) of not less than 200,000 hours operation at maximum cataloged operating speed.

3. Drives:

a. In accordance with Article Fan Drives.

b. Factory set to specified fan revolutions per minute.

c. Type: Belt.

d. Arrangement: Arrangement 9.

E. Accessories: Provide as follows and, in addition, as indicated in Equipment Schedule:

1. Housing Access Doors: Bolted and gasketed.

2. Flanged Inlet: Heavy gauge construction, factory drilled and flanged.

3. Shaft Seal: Viton construction, located at shaft penetration of housing.

4. Belt Guard: OSHA type, sheet metal construction same material as fan housing, for complete coverage of belts and sheaves.

5. Shaft and Bearing Guard: Sheet metal construction same material as fan housing, for

complete coverage of shaft and bearings.

6. Motor and Drive Cover:
    a. Factory fabricated, OSHA type.
    b. Sheet metal construction, same material as fan housing.
    c. Vented, openings sufficient size for proper motor cooling.
7. Unitary Subbase:
    a. Structural metal subbase, same material as fan housing.
    b. Bolted to bottom of fan base/pedestal.
    c. Drilled for field installation of vibration isolators.
8. Spark Resistant Construction Classification: AMCA 99-0401 Type B.
9. Corrosion Protection Coating:
    a. Provide factory-applied corrosion protection coating on these fan components:
        1) Wheel (or propeller).
        2) Housing.
        3) Accessories.
        4) Interior surfaces in contact with airstream.
    b. Coating system shall be baked epoxy phenolic and shall be in accordance with Article Corrosion Protection Coating.

F. Manufacturers:
1. New York Blower.
2. Aerovent.
3. Hartzell.

2.11 CURING FAN, CENTRIFUGAL SWSI (CUF-101)

A. General
1. Factory-assembled blower; including housing, fan wheel, drive assembly, motor, and accessories;
2. Suitable to convey air at temperatures up to 250 degrees F;
3. Fan Performance: AMCA 99-2408 Class III;
4. Bearing AMCA Certified Ratings Seal for sound and air performance;
5. Blower shall have a capacity of 10,500 scfm at 12" WC (fluid density of 0.0667 lb/ft3)

B. Housing:
1. Material: Aluminum

2. Construction:
    a. Curved scroll configuration, with continuous seam welding and side angle reinforcement.
    b. Lifting lugs welded to housing.
    c. Drain connection located at lowest point of fan housing.
    d. Inlet/Outlet: Flanged and drilled to permit duct connection as shown on Drawings.
3. Base/Pedestal: All welded heavy gauge Type 316 stainless steel.

C. Wheel:
1. Centrifugal, one-piece, non-overloading, blade type as scheduled.
2. Material: Aluminum
3. Attached to fan shaft with split taper lock bushing.

D. Shaft, Bearings, Drive:
1. Shafts:
    a. Turned, ground and polished steel.
    b. Ends drilled and countersunk for tachometer readings.
    c. Keyed for sheave installation
    d. Equipped with grounding ring.
2. Bearings:
    a. Grease lubricated, precision antifriction ball, self-aligning type.
    b. Mounted in cast iron pillow block housing.
    c. Selected for average life (ABMA 9 L50) of not less than
    d. 200,000 hours operation at maximum cataloged operating speed.
3. Drives:
    a. In accordance with Article Fan Drives.
    b. Factory set to 1,784 fan revolutions per minute.
    c. Type: Belt.
    d. Arrangement: Arrangement 4.

E. Motor:
1. Totally Enclosed Fan Cooled
2. 40hp, 1,800 rpm
3. 230/460V, 3Ø, 60Hz
4. Premium 324T frame

F. Accessories: Provide as follows and, in addition, as indicated in Equipment Schedule:

1. Housing Access Doors: Bolted and gasketed.
2. Flanged Inlet and Outlet: Heavy gauge construction, punched and flanged.
3. Shaft Seal: standard viton construction, located at shaft penetration of housing.
4. Belt Guard: OSHA type, sheet metal construction same material as fan housing, for complete coverage of belts and sheaves.
5. Shaft and Bearing Guard: Sheet metal construction same material as fan housing, for complete coverage of shaft and bearings.
6. Inlet bell with screen
7. Motor and Drive Cover:
   a. Factory fabricated, OSHA type.
   b. Sheet metal construction, same material as fan housing.
   c. Vented, openings sufficient size for proper motor cooling
   d. Stainless steel/permanently affixed nameplate
8. Unitary Subbase:
   a. Structural metal subbase, same material as fan housing.
   b. Bolted to bottom of fan base/pedestal.
   c. Drilled for field installation of vibration isolators.
9. Spark Resistant Construction Classification: AMCA 99-0401 Type B.
10. Corrosion Protection Coating:
    a. Provide factory-applied corrosion protection coating on these fan components:
       1) Wheel
       2) Housing
       3) Accessories.
       4) Interior surfaces in contact with airstream.
    b. Coating system shall be baked epoxy phenolic and shall be in accordance with Article Corrosion Protection Coating.

G. Manufacturers:

1. Blower shall be a Twin City Fan Model 917-RBA or ***pre-approved*** equal

2.12 CORROSION PROTECTION COATING

A. General:

1. Factory-applied corrosion protection coating for application to fan components and accessories, where required by this Section.

2. Coating system shall be baked enamel, air-dry epoxy, or baked epoxy.
3. Color shall be factory standard.
4. Quality Control:
    a. Verify dry film thickness before final baking.
    b. Finished coating system shall be free from voids, checks, cracks and blisters.
5. Surface Cleaning: Clean parts to be coated as follows:
    a. Immerse parts in heated cleaning solution to remove lubricants, machining oils, and residual factory contamination.
    b. Follow with immersion in potable water bath to neutralize and remove cleaning solution.
    c. Chemical Pretreatment: Immerse parts in heated chemical solution, iron phosphate for steel, clear/yellow chromate for aluminum.

B. Baked Enamel:
1. Material: Alkyd modified urea-melamine single component baking enamel.
2. Surface Preparation: Clean surface to SSPC-SP 3.
3. Application: Standard air-pressurized spray equipment.
4. Curing: Oven baked at a metal temperature not to exceed 300 degrees F.
5. Finished Thickness: 1-mil to 2-mil dry film thickness.
6. Performance: Coating shall meet or exceed following criteria:
    a. Impact Resistance: 10 inch pounds, ASTM D2794 test method.
    b. Pencil Hardness: 2H, ASTM D3363 test method.
    c. UV Resistance: UV inhibited life of minimum 10 years when exposed to sun in State of Florida.
    d. Service Temperature: Maximum 230 degrees F, continuous.

C. Air-Dry Epoxy:
1. Material: Two-part catalyzed epoxy.
2. Surface Preparation: Clean surface to SSPC SP 3.
3. Application: Standard air-pressurized spray equipment.
4. Curing: Air dry.
5. Finished Thickness: 4 mil to 6 mil dry film thickness.
6. Performance:
    a. Coating shall meet or exceed following criteria:
        1) Salt Spray Test: Minimum 1,500 hour duration, ASTM B117 test method.

2) Pencil Hardness: H 2H, ASTM D3363 test method.

3) Service Temperature: Maximum 200 degrees F, continuous.

D. Baked Epoxy Phenolic:

1. Material:

a. Baking cross-linked epoxy-phenolic.

b. For outdoor applications, apply an UV resistant topcoat.

2. Surface Preparation: Sandblast surface to SSPC-SP 5.

3. Application: Electrostatic or conventional compressed air spray equipment.

4. Curing: Oven baked at a metal temperature not to exceed 400 degrees F.

5. Finished Thickness: 6-mil to 8-mil dry film thickness.

6. Performance: Coating shall meet or exceed following criteria:

a. Salt Spray Test: Minimum 1,000-hour duration, ASTM B117 test method.

b. Humidity Resistance: Minimum 1,000-hour duration, ASTM D2247 test method.

c. Impact Resistance: 160 inch pounds, ASTM D2794 test method.

d. Pencil Hardness: 3H, ASTM D3363 test method.

e. UV Resistance: UV inhibited life of minimum IO years when exposed to sun in State of Florida.

7. Service Temperature: Maximum 200 degrees F, continuous.

2.13 MOTORS

A. General:

1. Provide integral self-resetting overload protection on single-phase motors.

2. Motors for fans specified for use with variable frequency drives shall be inverter duty type.

Motors shall not operate into service factor in any case.

B. Motor requirements shall be as follows, unless designated otherwise on Equipment Schedule:

1. Torque Characteristics: Sufficient to accelerate driven loads satisfactorily.

2. Winding Thermal Protection: None.

3. Space Heater: No.

4. Number of Speeds: Single.

5. Number of Windings: One.

6. Motor Efficiency: Energy efficient.

7. Shaft Type: Solid, carbon steel.
8. Mounting: As required for fan arrangement.
9. Service Factor: 1.15.

2.14 ACCESSORIES

A. Equipment Identification Plates: Furnish 16-gauge Type 316 stainless steel identification plate securely mounted on each separate equipment component and control panel in a readily visible location. Plate shall bear 3/8-inch high engraved block type black enamel filled equipment identification number and letters indicated in this Specification and as shown on Drawings.

B. Lifting Lugs: Furnish suitably attached for equipment assemblies and components weighing over 100 pounds.

C. Inlet Filter/Silencer

1. Each compost blower package shall be supplied with one combination inlet filter/silencer;
2. The inlet filter/silencer shall be mounted directly to the 90° intake elbow directly upstream of the blower intake flange;
3. The inlet filter/silencer housing shall be equipped with a 12” flanged connection;
4. The filter media removal efficiency shall be a minimum of 98% at 10 microns in accordance with the testing requirements of ASHRAE 52.2 MERV10, corresponding to an EN779 minimum M5 Filter Classification;
5. The silencer portion shall be located upstream of the inlet filter and shall provide a minimum 10 dB noise reduction at the blower’s octave band center frequency (in Hz);
6. The filter element shall be designed to trap dirt on the inside so that upon changing the element, accumulated dust particles do not fall into the machinery. Filters where dust accumulates on the external surface of the filter shall not be permitted;
7. Filter/silencer (clean element) performance losses shall be included in the entire package performance calculation – total losses shall be ≤ 0.5” at the expected airflow rate of 2,400 cfm/blower;
8. The inlet filter/silencer shall be an Endustra Trivent® Series P09 with Enduralast® Hi-Flow synthetic filter element E047935, or approved equal.

2.15 SOURCE QUALITY CONTROL

A. General:

1. Fan shall operate at single stable point as indicated by fan curve. Fans having two potential operating points are not acceptable.
2. Fan and motor combination shall be capable of delivering 110 percent of scheduled air quantity and static pressure. Motor shall not operate into motor

service factor in any listed case.

3. Consider drive efficiency in motor selection according to manufacturer's published recommendation or according to AMCA 203, Appendix L.

B. Testing Provisions:

1. Provide tachometer access holes large enough to accept standard tachometer drive shaft.

Center punch fan shaft to accommodate tachometer readings.

C. Vibration Test:

1. Each fan furnished with a 5-hp or larger motor shall have factory run vibration test, including vibration signatures taken on each bearing in horizontal, vertical, and axial direction.

2. Vibration reading as measured at scheduled rotational speed shall not exceed the following values when fan is rigidly mounted:

a. Belt Drive (except Vane Axial): 0.15 inch per second peak velocity.

b. Belt Drive Vane Axial: 0.08 inch per second peak velocity.

c. Direct Drive: 0.08 inch per second peak velocity.

3. Written records of run test and vibration test shall be made available upon request.

PART 3 - EXECUTION

3.01 INSTALLATION

A. Install fans level and plumb.

B. Scroll Drains: Pipe drain connection through running trap to floor drain.

C. Labeling:

1. Label fans in accordance with Article Accessories.

D. Service Access: Locate units to provide access spaces required for motor, drive, bearing, servicing, and fan shaft removal.

E. Equipment Support and Restraints:

1. Install floor-mounted units on concrete bases designed to withstand, without damage to equipment, the seismic force required by code.

2. Secure vibration and seismic controls to concrete bases using anchor bolts cast in concrete base.

3. Seismic Restraint Snubbers: Install with sufficient clearance so unit isolators are not restricted for proper free isolation, but do limit movement in all directions.

F. Connections

1. Refer to Section 23 31 13, Metal Ducts.

2. Isolate duct connections to fans.
3. Install ductwork adjacent to fans to allow proper service and maintenance.

3.02 FIELD QUALITY CONTROL

A. Functional Tests:
1. Verify blocking and bracing used during shipping are removed.
2. Verify fan is secure on mountings and supporting devices, and connections to ducts and electrical components are complete.
3. Verify proper thermal-overload protection is installed in motors, starters, and disconnect switches.
4. Verify that cleaning and adjusting are complete.
5. Disconnect fan drive from motor; verify proper motor rotation direction, and verify fan wheel free rotation and smooth bearing operation.
6. Reconnect fan drive system; align and adjust belts and install belt guards.
7. Verify lubrication for bearings and other moving parts.
8. Verify manual and automatic volume control and fire and smoke dampers in connected ductwork are in fully open position.

B. Performance Tests:
1. Starting Procedures:
a. Energize motor and adjust fan to indicated revolutions per minute.
b. Measure and record motor voltage and amperage.
2. Operational Test:
a. After electrical circuitry has been energized, start units to confirm proper motor rotation and unit operation.
b. Repair or replace malfunctioning units; retest as specified after repairs or replacement is made.
c. Test and adjust control safeties.
3. Replace damaged and malfunctioning controls and equipment.

3.03 MANUFACTURER'S SERVICES

A. Provide manufacturer's representative at site for installation assistance, inspection and certification of proper installation, equipment testing, startup assistance, and training of Owner's personnel for specified component, subsystem, equipment, or system.

B. Manufacturer's Representative: Present at site or classroom designated by Owner, for minimum person-days listed below, travel time excluded:
1. 1 person-day for installation assistance and inspection.

2. 1 person-day for each type of fan, performance testing, and completion of Manufacturer's Certificate of Proper Installation.

C. Refer to Section 01 40 00 – Quality Requirements and Section 01 75 00 – Starting and Adjusting.

3.04 ADJUSTING

A. Adjust damper linkages for proper damper operation.

B. Adjust belt tension.

C. Lubricate bearings.

D. Balancing:

1. Perform air system balancing as specified in Section 15950, HVAC Systems Testing, Adjusting, and Balancing.

2. Replace fan and motor sheaves as required to achieve design airflow.

E. Vibration Testing:

1. Perform field testing on rotating equipment, where specified in Section 15950, HVAC Systems Testing, Adjusting, and Balancing, to determine actual operating vibration.

2. If vibration limits described therein are exceeded, rebalance equipment in-place until design tolerances are met.

3.05 CLEANING

A. After completing system installation, including outlet fitting and devices, inspect exposed finish. Remove burrs, dirt, and construction debris, and repair damaged finishes.

B. On completion of installation, internally clean fans according to manufacturers' written instructions. Remove foreign material and construction debris. Vacuum fan wheel and cabinet.

3.06 SUPPLEMENTS

A. The supplements listed below, following "End of Section," are a part of this Specification.

1. 43 11 19.01, Process Fan – Data Sheet.

END OF SECTION 43 11 19

PROCESS FANS - DATA SHEET					40 11 19.01
SYMBOL				COMP-FAN-101 THRU 112	BIO-FAN-101 AND 102
SERVICE				ODOROUS COMPOST AIR	ODOROUS COMPOST AIR
TYPE				UTILITY BLOWER, CENTRIFUGAL SWSI, HEAVY DUTY	UTILITY BLOWER, CENTRIFUGAL SWSI, HEAVY DUTY
FAN DATA	AIRFLOW	MAX	CFM	1,700	19,125
		@ SP	IN W.G.	8	11
		MIN	CFM	1,700	19,125
	SPEED	RPM		2,620	2,414
	DRIVE TYPE			VFD, DIRECT, ARR4	VFD, BELT, ARR9
	WHEEL	TYPE		ALUM OR ALKYL COATED STEEL	ALUM OR ALKYL COATED STEEL
		MIN. DIA.	INCH	10	30
	MAXIMUM	BHP		7.5	50
SOUND DATA	SOUND POWER LEVEL Db (RE 10-12W) @ MID OCTAVE BAND FREQUENCY (Hz)		63	72	111
			125	83	110
			250	92	109
			500	94	105
			1K	93	101
			2K	91	95
			4K	85	91
			8K	80	88
ELECTRCIAL DATA	MOTOR		HP	7.5	60
			RPM	2,620	2,414
			ENCL.	TEFC	TEFC
	VOLT			460	460
	PH			3	3
MAXIMUM DIMENSIONS	LENGTH		INCHES	37	62
	WIDTH		INCHES	34	67
	HEIGHT		INCHES	45	70
	WEIGHT		LBS	350	1,800
MANUFACTURE				NYB	NYB
MODEL NO.				17AM-SERIES20GI	27BI-SWC4
APPLICABLE REMARKS:				A, C, D	A, C, D

ABBREVIATIONS: FC: FORWARD CURVED BI: BACKWARD INCLINED AF: AIR FOIL

REMARKS:

A: 100% WHEEL DIAMETER
B: INLET BOX
C: DRAIN, DRAIN PLUG
D: FLANGED INLET/OUTLET
E:
F:

DIVISION 44

POLLUTION & WASTE CONTROL EQUIPMENT

SECTION 44 10 00
COMPOST BIOFILTER ODOR CONTROL SYSTEM

PART 1 - GENERAL

1.01 SUMMARY

A. Section includes:

1. Performing of the following, as indicated, in accordance with the provision of the Contract Documents:

   a. Construction of the biofilter odor control system.

B. Related Sections include:

1. Section 33 11 36 – Irrigation System – Well, Pump, Piping & Controls

C. Definitions:

1. Negative Aeration – Foul air collected from individual compost bays through a suction process where the foul air is conveyed to a biofilter for odor treatment.
2. Biofilter Media – woodchips free of ground green waste (leaves and grass clippings).

1.02 SUBMITTALS

A. Action Submittals

1. Shop Drawings: Any vendor modifications to the layout plans.
2. Slab construction methods including joint placement and layout.

B. Information Submittals:

1. Contractor shall provide high-level plan for concrete placement around biofilter laterals to mitigate pipe movement from heat expansion or floatation.

C. Quality Assurance: Contractor shall notify Engineer at least 5 days prior to smoke testing. Engineer shall be present during both smoke tests to verify airflows and overall integrity of the air distribution system.

1.03 REFERENCES

A. The following is a list of standards which may be referenced in this section:

1. Air American Society of Mechanical Engineers (ASME): Bl6.5, Pipe

   Flanges and Flanged Fittings NPS 112 through NPS 24.

1.04 BIOFILTER ODOR CONTROL PERFORMANCE REQUIREMENTS

A. One (1) biofiltration odor control system (two biofilters) shall be provided to treat foul air collected from the negative aeration, active composting process.

B. System shall be suitable for outdoor installation in a Class I, Div 2, Group D area in

accordance with NFPA 820.

C. Any electrical component located within 3 feet of a potential leak source shall be labeled for use in a Class I, Div 1, Group D environment.

D. All components of the biofilter shall be compatible with the conditions and chemicals to which they will be subjected during normal operation. Compounds the materials must be compatible include, but are not limited to:

1. Hydrogen Sulfide
2. Sulfuric Acid
3. Other Reduced-Sulfur Compounds
4. Ammonia

E. Biofiltration Odor Control System shall meet the following criteria:

Specification	Typical Range of Values
Type of Biofilter Media	Woodchips
Empty-Bed Residence Time	60 seconds
Media Temperature	40°F - 120°F
Media pH	5.5 – 8.5
Active Media Depth	72 inches
Media Moisture Content	> 50%
Initial Pressure Drop Thru Fresh Media	< 0.25” w.c./ft of media depth
Max Pressure Drop Thru Aged Media	< 1.0” w.c./ft of media depth
Dry Media Bulk Density	< 600 lb/CY
F. Notes: 1. Woodchips shall be hardwood with minimal green waste from leaves.	

1.05 EXTRA MATERIALS

A. Furnish spare parts and special tools to operate and provide regular maintenance of the biofilter irrigation system.

PART 2 - PRODUCTS

2.01 BIOFILTER MEDIA

A. Biofilter Media: The biofilter media shall be supplied by the owner. Media is expected to be the same as composting bulk agent, which is ground woodchips.

B. Design Intent: Each of the biofilter systems shall treat 19,125 scfm of odorous exhaust air using biofilter media in the area shown on the Drawings.

PART 3 - EXECUTION

3.01 INSTALLATION OF BIOFILTER MEDIA

A. BIOFILTER MEDIA:

1. Coordinate with Owner and facility operators for procurement of woodchip material. Delivery, placement, and installation of biofilter material shall not interrupt any current facility operations.
2. Contractor shall furnish all equipment and accessories necessary to place and install biofilter media.
3. Placement of biofilter media shall happen after biofilter facility is fully constructed and passes all performance and equipment testing requirements.
4. Media Installation Sequence: Media installation shall not begin until after installation of connecting ductwork and initial smoke test is complete (See FIELD ACCEPTANCE TESTING).
5. Moisture Control: Moisture addition is provided through a sprinkler irrigation system. The irrigation system must be operational before media is placed.

B. FIELD ACCEPTANCE TESTING:

1. Preliminary tests, field tests, start-up and initial operation shall be performed in accordance with the Contract Documents.
2. All testing shall be done in the presence of the Engineer or Owner approval representative.
3. Final acceptance of the biofilter media and biofilter facility shall be made after the equipment has been demonstrated in the field to meet the performance requirements stated in this specification under all normal operating conditions and verification that the motors are not overloaded in normal operating conditions.
4. Adjustment, modification, or replacement of any biofilter media which fail to meet specified requirements shall be included in the Contractor acceptance testing. Owner and Engineer shall review and approve of any modifications proposed by Contractor necessary to correct any issues prior to work commencing.
5. Acceptance Test: Perform two smoke tests on each biofilter system at the design airflow rate of 19,125 scfm. Each smoke test shall be video recorded for owner/engineer review. The Contractor shall provide enough smoke candles to run

the tests for a ten minute duration at the design air flow rate. The Engineer shall be on-site to observe both smoke tests. The smoke tests shall consist of placing a smoke candle at the inlet of the blower that shall, in turn, force air and smoke through the piping distribution system.

a. The Contractor shall perform the first smoke test to verify joint integrity and to prove proper air distribution throughout the header and distribution lateral pipes. The smoke test shall be conducted after placement of the distribution lateral pipes. Prior to first smoke test, the biofilter laterals shall be flushed clean by flushing with potable water to the drain of each lateral and all the laterals shall be inspected to ensure clear openings. The absence of smoke over any section of laterals will indicate lack of air distribution in that area and shall result in failure of the smoke test. The Contractor shall replace broken, damaged, or leaking pipe and fittings in areas that are damaged.

b. The second smoke test performed by the Contractor shall be performed after placement of the media. The absence of smoke over any section of the pipe will indicate lack of air distribution in that area and shall result in failure of the smoke test. If uneven air distribution through the media is observed, the City shall re-distribute the media material and re-test the system until satisfactory test results are obtained. The Contractor shall repair pipe and fittings as necessary to correct air distribution problems. Any excessive air leakage around the edges of the filter shall be corrected by the City, including placement of additional media. The Contractor shall re-run the smoke test, if necessary, to demonstrate uniform air distribution throughout the aeration plenum.

END OF SECTION 44 10 00

APPENDIX A

PROJECT DRAWINGS

Garden City Compost Facility Improvements
Construction Drawings for the City of Missoula, Montana

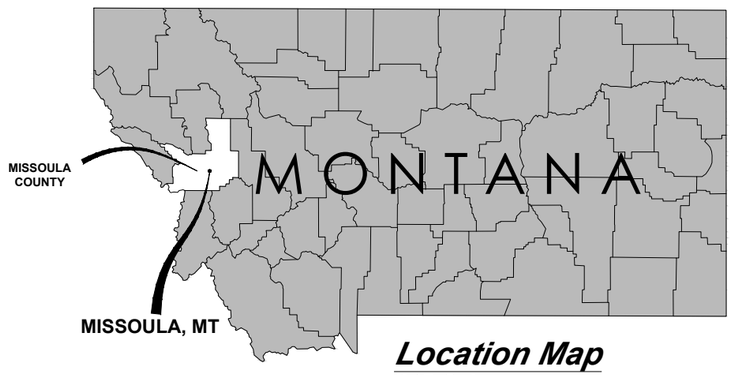

Location Map
Not To Scale

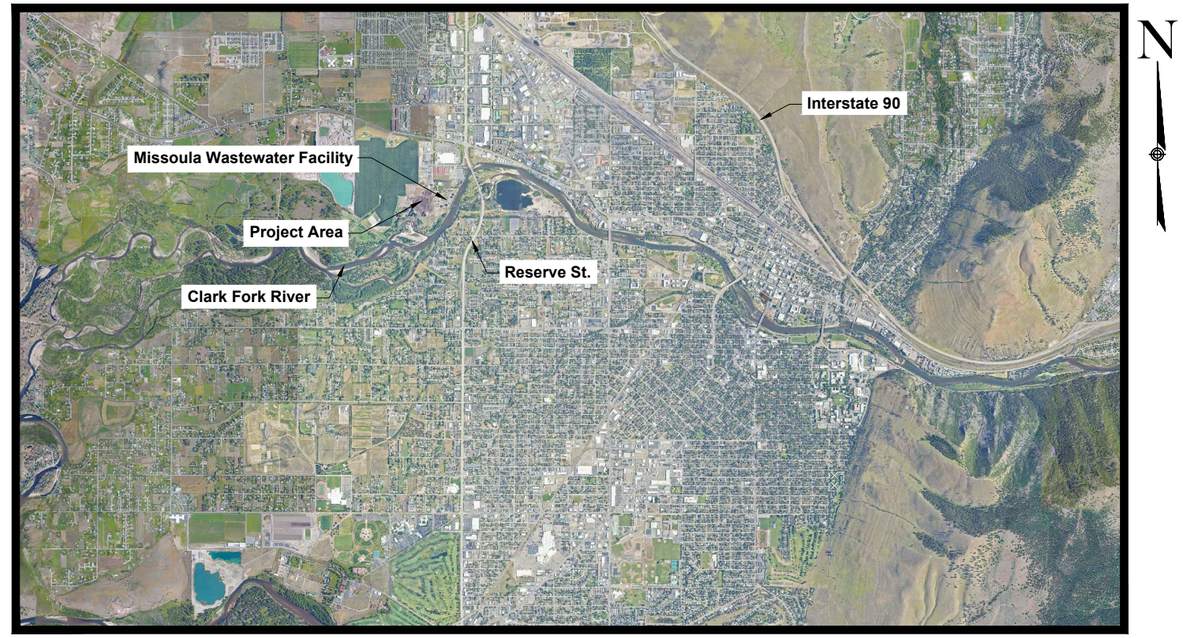

MISSOULA, MT MAP

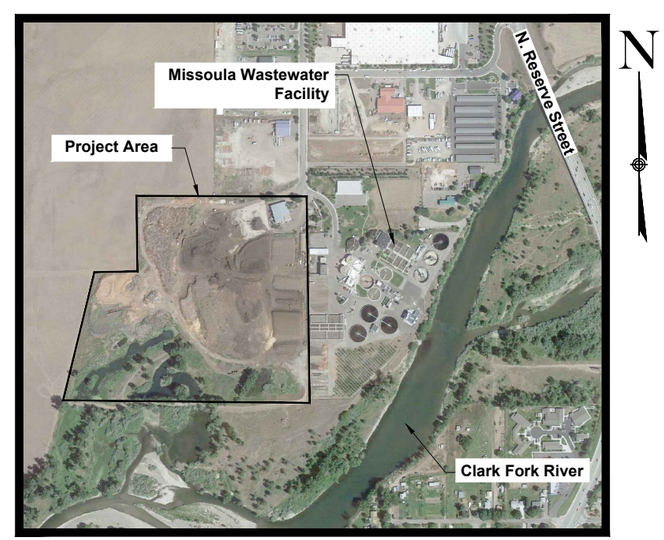

FACILITY SITE MAP

WORKSCOPE

Install New Reversing Air Flow Biosolids & Green Waste Composting Facility with Odor Control, Materials Containment and Curing.

FUNDING SOURCES:

State Revolving Fund Loan Program (MDEQ/MDNRC)

DESIGN CRITERIA:

- **Design Year: 2044**

PROJECT COMPONENTS:

- **Excavation and replacement of unsuitable onsite soils with imported engineered fill**
- **12-bay aerated compost facility with 2 biofilters**
- **Primary sensing equipment and automated controls**
- **Conex Control Building**
- **Curing facility and Pre-Fabricated Control Shed**
- **Concrete biosolids bin and pre-compost bin**
- **Rumble grate trough**

Revision	Date	By
30% Draft	8/1/24	AE
60% Draft	11/18/24	AE
90% Draft	1/31/25	AE
Final	2/14/25	AE

Revision: Final
Plot Scale: 1:2
Drawn By: A.Eckhart, P.E.
Approved By: P.Montgomery, P.E.
Checked By: A.Eckhart, P.E.
Designed By: P.Montgomery, P.E.

Engineer
Anderson~Montgomery CONSULTING ENGINEERS
1064 N. Warren
Helena, MT 59601
Phone (406) 449-3303

Owner: City Of Missoula

Project Title: Garden City Compost Facility Improvements

Sheet Title: **Cover and Project Location**

Sheet: **G-1**

X:\MISSOULA COMPOST\DESIGN\DRAWINGS\Sheets\1 – General\G-1 Cover.dwg SAVED: 2/3/25 PRINTED: 2/11/25 BY: ADAM

GENERAL

G-1	Cover
G-2	Sheet Index
G-3	Legend
G-4	Abreviations
G-5	Design Criteria
G-6	Process Flow Diagram
G-7	Geotechnical Borehole Locations
G-8	Location and Survey Control Coordinates
G-9	General Project Notes

INSTRUMENTATION AND CONTROL

PID-1	PID Symbols and Legend
PID-2	PID Symbols and Legend
PID-3	Compost Area No. 1 & Biofilter No. 1
PID-4	Compost Area No. 2 & Biofilter No. 2
PID-5	Compost Area Network Diagram

SITE DEMOLITION

D-1	Demolition Plan and Photos
D-2	Transitional Facility Demolition Plan and Photos

CIVIL

C-1	Overall Site Grading Plan
C-2	Site Grading Plan - North
C-3	Site Grading Plan - South
C-4	Site Plan
C-5	Rumble Grate Trough Site Plan
C-6	Curing Site Plan
C-7	Compost Bays and Biofilters Site Plan
C-8	Pre-Compost Containment Bin & Biosolids Bin Site Plan
C-9	Irrigation Well Site Plan
C-10	Plan & Profile - CB-1 to LS
C-11	Plan & Profile - LS to S.S. MH Forcemain
C-12	Plan & Profile - Biofilter Sump 1 to CB-1
C-13	Plan & Profile - Biofilter Sump 2 to CB-3
C-14	Plan & Profile - Sump 4 to E-One LS
C-15	Plan & Profile - E-One LS to LS Forcemain
C-16	Runoff Control Plan

CIVIL DETAILS

CD-1	Civil Details
CD-2	Civil Details
CD-3	Civil Details
CD-4	Pipe Supports
CD-5	Manhole Details
CD-6	Catch Basin 1 Details
CD-7	Catch Basin 2 Details
CD-8	Catch Basin 3 Details
CD-9	Lift Station Plan
CD-10	Lift Station Section
CD-11	E-One Lift Station Details
CD-12	Irrigation Well Details
CD-13	Irrigation Plumbing Diagram

CONTROL BUILDING

CB-1	Office Building Floor Plan
CB-2	Office Building Elevations - North & South
CB-3	Office Building Elevations - East & West
CB-4	Control Building & Emergency Generator Subgrade

MECHANICAL

M-1	Compost Bays Piping Plan
M-2	Compost Bay Piping Details
M-3	Compost Bay Aeration Piping Details
M-4	Compost Bay Aeration Sections
M-5	Biofilter Bays Piping
M-6	Biofilter 1 Details
M-7	Biofilter 1 Piping Details
M-8	Biofilter Aeration Lateral Details
M-9	Biofilter 1 Condensate Collection Details
M-10	Biofilter 2 Details
M-11	Biofilter 2 Piping Details
M-12	Biofilter 2 Condensate Collection Details
M-13	Biofilter 1 Condensate Sump 1 Details
M-14	Biofilter 2 Condensate Sump 2 Details
M-15	Compost Condensate Collection
M-16	Compost Condensate Collection Section
M-17	Compost Condensate Sump 3 Details
M-18	Foul Air to Biofilter Condensate Collection
M-19	Foul Air to Biofilter Condensate Collection Section
M-20	Condensate Sump 4 Details
M-21	Condensate Sump 4 Section
M-22	Condensate Sump 4 Section
M-23	Biofilter Bays Irrigation
M-24	Curing Bays
M-25	Curing Bays Sections
M-26	Curing Bays Section & Details
M-27	Curing Blower & Control Shed Details
M-28	Curing Blower Details
M-29	Mechanical Details
M-30	Instrument Details

STRUCTURAL

S-1	Structural Notes
S-2	Structural Notes Continued
S-3	Structural Details
S-4	Structural Details
S-5	Structural Details
S-6	Structural Details
S-7	Structural Details
S-8	Structural Details
S-9	Overall Slab On Grade Plan
S-10	Compost Bays Plan
S-11	Biofilters Plan
S-12	Push Wall Sections
S-13	Biosolids Bin Details
S-14	Pre-Compost Containment Bin Details
S-15	Biosolids & Pre-Compost Mixing Bin Wall Elevations
S-16	Biosolids & Pre-Compost Mixing Bin Details
S-17	Curing Wall Details
S-18	Rumble Grate Trough
S-19	Rumble Grate Trough Details

ELECTRICAL

E-0	Schedules and Legend
E-1	Overall Electrical Site Plan
E-2	One-Line Diagram
E-3	Control Building Electrical Plans
E-4	Curing, Compost and Biofilter Electrical Plan

DRAWING IDENTIFICATION SYSTEM:

LETTER	DISCIPLINE
G	GENERAL
PID	INSTRUMENTATION AND CONTROL
D	SITE DEMOLITION
C	CIVIL
CD	CIVIL DETAILS
CB	CONTROL BUILDING
M	MECHANICAL
S	STRUCTURAL
E	ELECTRICAL

DETAIL DESIGNATION:

A — DETAIL OR SECTION DESIGNATION

10 — ON DWG WHERE SECTION OR DETAIL IS TAKEN: DWG NO. WHERE SHOWN

ON DWG WHERE SECTION OR DETAIL IS SHOWN: DWG NO. WHERE TAKEN

Revision	Date	By
30% Draft	8/1/24	AE
60% Draft	11/18/24	AE
90% Draft	1/31/25	AE
Final	2/14/25	AE

Revision: Final
Plot Scale: 1:2
Drawn By: A.Eckhart, P.E.
Approved By: P.Montgomery, P.E.
Checked By: A.Eckhart, P.E.
Designed By: P.Montgomery, P.E.

Engineer
Anderson~Montgomery CONSULTING ENGINEERS
1064 N. Warren
Helena, MT 59601
Phone (406) 449-3303

Owner: City Of Missoula

Project Title: Garden City Compost Facility Improvements

Sheet Title: **Index**

Sheet: **G-2**

X:\MISSOULA COMPOST\DESIGN\DRAWINGS\Sheets\1 – General\G-2 Index.dwg SAVED: 2/11/25 PRINTED: 2/19/25 BY: ADAM

PIPE AND FITTING SYMBOLS

DOUBLE LINE	SINGLE LINE	DESCRIPTION	DOUBLE LINE	SINGLE LINE	DESCRIPTION
		EXISTING PIPE (SCREENED)			CONCENTRIC REDUCER
		NEW PIPE			ECCENTRIC REDUCER
		EXISTING PIPE TO BE ABANDONED			UNION
		EXISTING PIPE TO BE REMOVED			BLIND FLANGE
		WELDED JOINT			CAP
		GROOVED END JOINT (FLEXIBLE)			CROSS
		GROOVED END JOINT (RIGID)			
		GROOVED END FLANGE			TEE
		FLANGED JOINT			
		FLANGE COUPLING ADAPTER			ELBOW, 45°
		MECHANICAL COUPLING			
		ELBOW UP			LATERAL (WYE)
		ELBOW DOWN			
		TEE UP			ELBOW, 90°
		TEE DOWN			

VALVE SYMBOLS

DOUBLE LINE	SINGLE LINE	DESCRIPTION	DOUBLE LINE	SINGLE LINE	DESCRIPTION
		GLOBE			SAMPLE VALVE NO THREAD OUTLET
		GATE			HOSE VALVE
		BALL		X	NON FREEZE HOSE VALVE, X=NO IN SPECS
		PLUG		X	NON FREEZE HOSE VALVE, X=NO IN SPECS
		BUTTERFLY		S	SAMPLE
		DIAPHRAGM			PRESSURE RELIEF
		PINCH			SURGE CONTROL
		SWING CHECK			AIR/VACUUM
		DOUBLE DISK CHECK			REGULATED SIDE PRESSURE REDUCING
		BALL CHECK			PRESSURE REDUCING VALVE
		AIR DAMPER			FLOW CONTROL VALVE / NEEDLE VALVE

CIVIL SYMBOLS

DESCRIPTION	SINGLE LINE	DOUBLE LINE
CONCRETE		
GRAVEL		
PAVEMENT		
CURB AND SIDEWALK		
PROPERTY LINE		
EASEMENT		
RIGHT OF WAY		
GRAVEL ROAD		
CONTOURS	4200 4198	4200 4198
DRAINAGE		
WATER	12"W	W
WATER SERVICE LINE		
WATER SERVICE	S	
SANITARY SEWER		SS MH
STORM DRAIN		
FENCE LINE (BARB WIRE)		
FENCE LINE (CHAIN LINK)		
SIGN		
OVERHEAD POWER	OHPWR	
UNDERGROUND FIBER OPTIC	FO	
UNDERGROUND TELEPHONE, PEDESTAL	PH	
UNDERGROUND GAS	GAS	
UNDERGROUND POWER, TRANSFORMER	PWR	
NATURAL GAS		
HOT WATER		
COLD WATER		
NON-POTABLE WATER		
PLANT AIR		

DESCRIPTION	SINGLE LINE	DOUBLE LINE
CABLE TV	TV	TV
CURB		
DRAINAGE DITCH		
ROAD		
BUILDING		
DROP INLET		
EASEMENT PIN		
POWER POLE		
POWER POLE WITH GUY WIRE		
LIGHT POLE		
SURVEY POINT		
CONTROL POINT	CP	CP
TELEPHONE PED	PED	PED
TELEPHONE BOX		
ELECTRICAL BOX		
CURB BOX, SIGN		
DRILL HOLE OR TEST PIT	DH1 TP1	DH1 TP1
CATTLE GUARD		
SECTION CORNER		
QUARTER CORNER		
FROST FREE HYDRANT		
HOSE BIB		HB
FROST FREE HOSE BIB		FF HB

NOTES:

- CONTACT THE ENGINEER FOR SYMBOLS NOT LISTED.
- THIS IS A STANDARD LEGEND SHEET. THEREFORE, SOME SYMBOLS MAY APPEAR ON THIS SHEET AND MAY NOT BE UTILIZED ON THIS PROJECT.

Revision	Date	By
30% Draft	8/1/24	AE
60% Draft	11/18/24	AE
90% Draft	1/31/25	AE
Final	2/14/25	AE

Revision: Final
Plot Scale: 1:2
Drawn By: A.Eckhart, P.E.
Approved By: P.Montgomery, P.E.
Checked By: A.Eckhart, P.E.
Designed By: P.Montgomery, P.E.

Engineer
Anderson~Montgomery CONSULTING ENGINEERS
1064 N. Warren
Helena, MT 59601
Phone (406) 449-3303

Owner: City Of Missoula

Project Title: Garden City Compost Facility Improvements

Sheet Title: **Legend**

Sheet: **G-3**

X:\MISSOULA COMPOST\DESIGN\DRAWINGS\Sheets\1 – General\G-3 Legend.dwg SAVED: 2/3/25 PRINTED: 2/11/25 BY: ADAM

ABBREVIATIONS:

ø	DIAMETER
@	AT
AA	ALL AROUND
AB	ANCHOR BOLT, AGGREGATE BASE
AC	ASBESTOS CEMENT OR ACRE
AFF	ABOVE FINISHED FLOOR
ADA	AMERICANS WITH DISABILITIES ACT
AH	AHEAD
AL	ALUMINUM
ANC	ANCHOR
ANSI	AMERICAN NATIONAL STANDARDS INSTITUTE
APPROX	APPROXIMATELY
ARV	AIR RELEASE VALVE
AVE	AVENUE
AWWA	AMERICAN WATER WORKS ASSOCIATION
BC	BUILDING CORNER
BF	BLIND FLANGE
BFF	BELOW FINISH FLOOR
BFV	BUTTERFLY VALVE
BGS	BELOW GROUND SURFACE
BK	BACK
BLDG	BUILDING
BLVD	BOULEVARD
BM	BENCH MARK
BOC	BACK OF CURB
BOD	BIOCHEMICAL OXYGEN DEMAND
BV	BALL VALVE
BVC	BEGIN VERTICAL CURVE
C	CHANNEL OR CENTER
CARV	COMBINATION AIR RELEASE VALVE
CATV	CABLE TELEVISION
CF	CUBIC FEET
CFS	CUBIC FEET PER SECOND
CI	CAST IRON OR CURB INLET
CIP	CAST IRON PIPE OR CAST-IN-PLACE
CIPP	CURED-IN-PLACE PIPE
CL	CENTERLINE
CLR	CLEAR
CMP	CORRUGATED METAL PIPE
CMU	CONCRETE MASONRY UNIT
CO	CLEANOUT
CONC	CONCRETE
COS	CERTIFICATE OF SURVEY
CP	CONTROL POINT
CPE	CORRUGATED POLYETHYLENE PIPE
CPLG	COUPLING
CPVC	CHLORINATED POLYVINYL CHLORIDE
CSP	CORRUGATED STEEL PIPE
CV	CHECK VALVE
CY	CUBIC YARDS
C1D1	CLASS 1 DIVISION 1
CB	CATCH BASIN
DEC	DECANT
DEMO	DEMOLISH
DEPT	DEPARTMENT
DH	DRILL HOLE (SOIL BORING)
DI	DUCTILE IRON OR DRAIN INLET
DIA	DIAMETER
DIMJ	DUCTILE IRON MECHANICAL JOINT
DIP	DUCTILE IRON PIPE
DL	DRAIN LINE
DR	DRAIN OR DIMENSION RATIO
DWAS	DIGESTED WASTE ACTIVATED SLUDGE
DWG	DRAWING
EA	EACH
EFF	EFFLUENT
ELEV	ELEVATION
EOC	EDGE OF CONCRETE
EOP	EDGE OF PAVEMENT
EOS	EDGE OF SIDEWALK
EPDM	ETHYLENE PROPYLENE DIENE M-CLASS RUBBER
EVC	END VERTICAL CURVE
EW	EACH WAY
EXT	EXTERIOR
EXIST	EXISTING
FAB	FABRICATION
FC	FLEXIBLE COUPLING
FCA	FLANGED COUPLING ADAPTER
FDN	FOUNDATION
FETS	FLARED END TERMINAL SECTION
FF	FINISHED FLOOR
FA	FOUL AIR
FG	FINISH GRADE
FH	FIRE HYDRANT
FL	FLOOR, FLANGE OR FLOW LINE
FOC	FACE OF CURB OR FACE OF CONCRETE
FM	FORCE MAIN
FPT	FEMALE PIPE THREAD
FS	FINISHED SURFACE
FTG	FOOTING
FT	FOOT OR FEET
G	GAS
GA	GAUGE
GALV	GALVANIZED
GPD	GALLONS PER DAY
GPM	GALLONS PER MINUTE
GPS	GLOBAL POSITIONING SYSTEM, GALLONS PER SECOND
GSP	GALVANIZED STEEL PIPE
GV	GATE VALVE
GW	GREEN WASTE
HD	HEAVY DUTY OR HOT-DIPPED
HDPE	HIGH DENSITY POLYETHYLENE PIPE
HDR	HEADER
HGT	HEIGHT
HP	HORSEPOWER
HT	HEIGHT
HWY	HIGHWAY
HYD	HYDRANT
I&C	INSTRUMENTATION & CONTROL
IBC	INTERNATIONAL BUILDING CODE
ID	INSIDE DIAMETER
IN	INCH
INFL	INFLUENT
INT	INTERIOR OR INTERSECTION
INV	INVERT
JT	JOINT
K	KILOMETER
KW	KILOWATT
L	ANGLE, LONG
LB(S)	POUND(S)
LD	LOCAL DISCONNECT
LEB	LARGE END BELL
LF	LINEAL FOOT OR LINEAR FEET
LT	LEFT
LS	LIFT STATION
MAX	MAXIMUM
MC	MECHANICAL COUPLING
MCC	MOTOR CONTROL CENTER
MDT	MONTANA DEPT. OF TRANSPORTATION
MECH	MECHANICAL
MFR	MANUFACTURER
MH	MANHOLE
MIN	MINIMUM OR MINUTE
MJ	MECHANICAL JOINT
MPT	MALE PIPE THREAD
MPWSS	MONTANA PUBLIC WORKS STANDARD SPECIFICATIONS
MTL	MATERIAL
MWS	MAXIMUM WATER SURFACE
N	NORTH
NEC	NATIONAL ELECTRICAL CODE
N.I.C.	NOT IN CONTRACT
NO.	NUMBER
NPT	NATIONAL PIPE THREAD
NPW	NON-POTABLE WATER
NTS	NOT TO SCALE
OAL	OVERALL LENGTH
OC	ON CENTER
OD	OUTSIDE DIAMETER
OF	OUTSIDE FACE OR OVERFLOW
OHP	OVERHEAD POWER
PC	POINT OF CURVATURE
PE	PLAIN END
PH	PHONE
PI	POINT OF INTERSECTION
PL	PROPERTY LINE OR PLATE
PLCS	PLACES
PROP	PROPERTY OR PROPOSED
PSI	POUNDS PER SQUARE INCH
PSIG	POUNDS PER SQUARE INCH, GAUGE
PT	POINT OF TANGENCY
PVC	POLYVINYL CHLORIDE PLASTIC
PVI	POINT OF VERTICAL INTERSECTION
PWR	POWER
R	RADIUS
RCB	REINFORCED CONCRETE BOX
RCP	REINFORCED CONCRETE PIPE
RCPA	REINFORCED CONCRETE PIPE ARCHED
RDCR	REDUCER
RFC	ROTATED FOR CLARITY
ROW	RIGHT-OF-WAY
RPA	ROBERT PECCIA & ASSOCIATES
RPC	RED PLASTIC CAP
RPP	REINFORCED POLYPROPYLENE
RR	RAILROAD
RT	RIGHT
RW	RIGHT-OF-WAY OR RACEWAY
R/W	RIGHT-OF-WAY
RWL	RAIN WATER LEADER
S	SLOPE
SBB	SLUDGE BUFFER BASINS
S/C	SERVICE CONNECTION
SCH	SCHEDULE
SD	STORM DRAIN
SDI	STORM DRAIN INLET
SDR	STANDARD DIMENSION RATIO
SEB	SMALL END BELL
SECT	SECTION
SF	SQUARE FOOT/FEET
SIM	SIMILAR
SQFT	SQUARE FOOT/FEET
SS	SANITARY SEWER OR STAINLESS STEEL
SSMH	SANITARY SEWER MANHOLE
SSP	SPIRAL STEEL PIPE
ST	STREET
STA	STATION
STD	STANDARD
STL	STEEL OR STEEL PIPE
SUPER	SUPERNATENT
SY	SQUARE YARDS
T	TELEPHONE
TBC	TOP BACK OF CURB
TBLAY	TOP BACK OF LAYDOWN CURB
TBM	TEMPORARY BENCH MARK
TDW	TREATED DISINFECTED WATER
TEMP	TEMPERATURE OR TEMPORARY
THD	THREAD
TOA	TOP OF ASPHALT
TOC	TOP OF CONCRETE
TOG	TOP OF GRATE
TOS	TOP OF SIDEWALK
TOW	TOP OF WALL
TP	TEST PIT
TS	TECHNICAL SPECIFICATIONS
TV	CABLE TELEVISION
TW	TREATED WATER
TWAS	THICKENED WASTE ACTIVATED SLUDGE
TYP	TYPICAL
UBC	UNIFORM BUILDING CODE
UG	UNDERGROUND
UGP	UNDERGROUND POWER
UPC	UNIFORM PLUMBING CODE
V	VENT, VOLT OR VALVE
VERT	VERTICAL
VFA	VOLATILE FATTY ACID
VLV	VALVE
VPC	VERTICAL POINT OF CURVATURE
VPT	VERTICAL POINT OF TANGENCY
VTR	VENT THROUGH ROOF
W	WATER OR WEST
W/	WITH
W/O	WITHOUT
WAS	WASTE ACTIVATED SLUDGE
WLC	WATER LEVEL CONTROL
WS	WATER SURFACE OR WATER STOP
WSO	WATER SERVICE OUTLET
WSP	WELDED STEEL PIPE
WV	WATER VALVE
WW	WASTEWATER
WWF	WELDED WIRE FABRIC
X	USED AS A VARIABLE
XING	CROSSING
YD	YARD
YPC	YELLOW PLASTIC CAP

NOTES:

- CONTACT THE ENGINEER FOR ABBREVIATIONS NOT LISTED.
- THIS IS A STANDARD ABBREVIATIONS SHEET. THEREFORE, SOME ABBREVIATIONS MAY APPEAR ON THIS SHEET AND MAY NOT BE UTILIZED ON THIS PROJECT.

Revision	Date	By
30% Draft	8/1/24	AE
60% Draft	11/18/24	AE
90% Draft	1/31/25	AE
Final	2/14/25	AE

Revision: Final
Plot Scale: 1:2
Drawn By: A.Eckhart, P.E.
Approved By: P.Montgomery, P.E.
Checked By: A.Eckhart, P.E.
Designed By: P.Montgomery, P.E.

Engineer

Anderson~Montgomery
CONSULTING ENGINEERS
1064 N. Warren
Helena, MT 59601
Phone (406) 449-3303

Owner: City Of Missoula

Project Title: Garden City Compost Facility Improvements

Sheet Title: **Abbreviations**

Sheet: **G-4**

X:\MISSOULA COMPOST\DESIGN\DRAWINGS\Sheets\1 - General\G-4 Abbreviations.dwg SAVED: 2/3/25 PRINTED: 2/11/25 BY: ADAM

DESIGN CRITERIA FOR MISSOULA WWTP BIOSOLIDS COMPOSTING FACILITY			
Design Year	2044		
Description	**Parameter**	**Units**	**Design Value**
Materials			
Biosolids Quantity	Calendar Days	Dry Tons/Day	7.3
	5 Day/Week Operating Days	Dry Tons/Day	10.2
	Calendar Days	Wet Tons/Day	47
	5 Day/Week Operating Days	Wet Tons/Day	66
Biosolids Characteristics	Solids Content	% Total Solids	15.5
	Volatile Solids	% Volatile Solids	80
	Bulk Density	Pounds/Cubic Yard	1600
New Bulking Agent	Solids Content	% Total Solids	65
	Bulk Density	Pounds/Cubic Yard	450
Compost	Solids Content	% Total Solids	60
	Bulk Density	Pounds/Cubic Yard	900
Mixing			
Batch Mixer	Operational Schedule	Hours/Day (5 Day Operations)	4
Composting			
Initial Mix Characteristics	Solids Content	% Total Solids	40
	Bulk Density	Pounds/Cubic Yard	880
Detention Time	Calendar Days		21
	Working Weeks		3
Pile Dimensions	Base Depth	Feet	1
	Mix Height	Feet	10
	Cover Height	Feet	1
	Total Height	Feet	12
Aeration	Method	Positive or Negative	Negative
	Capacity	Cubic Feet Per Hour/Dry Ton	5000

DESIGN CRITERIA FOR MISSOULA WWTP BIOSOLIDS COMPOSTING FACILITY CONTINUED			
Description	**Parameter**	**Units**	**Design Value**
Screening			
Portable Screen			
Screen Type	Trommel		Trommel
Screen Size		Inches	3 / 8
Feed Capacity		Cubic Yards/Hour	>50
Redundant Unit			Yes
Curing			
Detention Time	Calendar Days		30
	Working Days		4
Pile Dimensions	Base Depth	Feet	0
	Mix Height	Feet	10
	Cover Height	Feet	0
	Total Height	Feet	10
Aeration	Method	Positive or Negative	Positive
	Capacity	Cubic Feet Per Hour/Dry Ton	1200
Storage			
Biosolids Receiving Bunker		Operational Days	0.5
Bulking Agent Uncovered 10'		Operational Days	20
Recycled Bulking Agent Uncovered		Operational Days	1
Compost Product Uncovered		Calendar Days	90
Odor Control			
Compost Process Exhaust		Continuous	Yes
Biofilter Dilution Air Ratio		% Dilution Air	300
Biofilter Empty Bed Contact Time		Seconds	60
Biofilter Depth		Feet	6

SUMMARY OF PROJECT IMPROVEMENTS
(Not all-inclusive)

BASE BID

- Excavation of unsuitable materials and engineered structural backfill within compost facility footprint
- 12-Bay, reversing airflow composting facility - concrete walls and slab; in-floor aeration; runoff collection; condensate collection; blowers; dampers; fittings
- Two Biofilters, in-floor air delivery; concrete walls and slab; condensate collection; blowers; dampers; fittings; irrigation system; groundwater well & controls
- Conex Control Building - complete compost control system; primary sensing devices; HMI; motor controls; electrical; HVAC
- Runoff Lift Station - submersible pump station to deliver contact runoff to the POTW plant drain
- Biosolids Bin and Pre-Compost Bin - concrete walls and slabs
- Concrete Rumble Grate Trough
- Emergency Generator and Automatic Transfer Switch

ADDITIVE ALTERNATE A

- 5-Bay Curing Facility - concrete footings; EcoBlock back & side walls; blowers; dampers; fittings
- Curing Control Shed (pre-fabricated shed) with controls and electrical

ADDITIVE ALTERNATE B

- Additional excavation of unsuitable materials and engineered structural fill within curing footprint
- Additional excavation of unsuitable materials and dengineered structural fill within green waste storage footprint

Revision	Date	By
30% Draft	8/1/24	AE
60% Draft	11/18/24	AE
90% Draft	1/31/25	AE
Final	2/14/25	AE

Revision: Final
Plot Scale: 1:2
Drawn By: A.Eckhart, P.E.
Approved By: P.Montgomery, P.E.
Checked By: A.Eckhart, P.E.
Designed By: P.Montgomery, P.E.

Engineer
Anderson~Montgomery
CONSULTING ENGINEERS
1064 N. Warren
Helena, MT 59601
Phone (406) 449-3303

Owner: City Of Missoula

Project Title: Garden City Compost Facility Improvements

Sheet Title: **Design Criteria**

Sheet: **G-5**

X:\MISSOULA COMPOST\DESIGN\DRAWINGS\Sheets\1 - General\G-5 Design Criteria.dwg SAVED: 2/3/25 PRINTED: 2/11/25 BY: ADAM

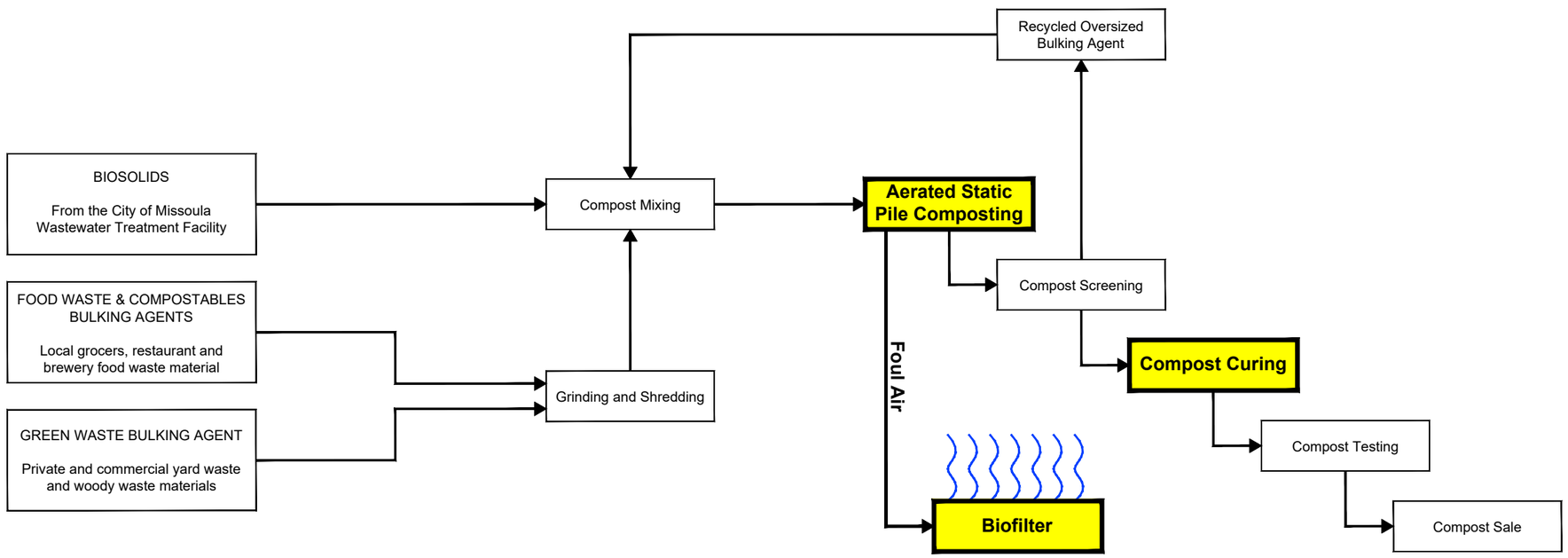

Compost Facility Process Flow Diagram

NO SCALE

Current Project Scope Elements

Revision	Date	By
30% Draft	8/1/24	AE
60% Draft	11/18/24	AE
90% Draft	1/31/25	AE
Final	2/14/25	AE

Revision: Final

Plot Scale: 1:2

Drawn By: A.Eckhart, P.E.

Approved By: P.Montgomery, P.E.

Checked By: A.Eckhart, P.E.

Designed By: P.Montgomery, P.E.

Engineer

Anderson~Montgomery
CONSULTING ENGINEERS
1064 N. Warren
Helena, MT 59601
Phone (406) 449-3303

Owner: City Of Missoula

Project Title: Garden City Compost Facility Improvements

Sheet Title: **Compost Facility Process Flow Diagram**

Sheet: **G-6**

X:\MISSOULA COMPOST\DESIGN\DRAWINGS\Sheets\1 - General\G-6 Process Flow Diagram.dwg SAVED: 2/3/25 PRINTED: 2/11/25 BY: ADAM

NOTES:

- **GEOTECHNICAL REPORT INCLUDED IN APPENDIX C OF THE CONTRACT DOCUMENTS.**

LEGEND:

- 1 - BOREHOLES
- TP-01 - TEST PITS
- TP-01 - TEST PITS

Borehole Locations

Revision	Date	By
30% Draft	8/1/24	AE
60% Draft	11/18/24	AE
90% Draft	1/31/25	AE
Final	2/14/25	AE

Revision: Final

Plot Scale: 1:2

Drawn By: A.Eckhart, P.E.

Approved By: P.Montgomery, P.E.

Checked By: A.Eckhart, P.E.

Designed By: P.Montgomery, P.E.

Engineer

Anderson~Montgomery
CONSULTING ENGINEERS
1064 N. Warren
Helena, MT 59601
Phone (406) 449-3303

Owner: City Of Missoula

Project Title: Garden City Compost Facility Improvements

Sheet Title: **Geotechnical Borehole Locations**

Sheet: **G-7**

X:\MISSOULA COMPOST\DESIGN\DRAWINGS\Sheets\1 - General\G-7 Geotechnical Borehole Locations.dwg SAVED: 2/3/25 PRINTED: 2/11/25 BY: ADAM

SURVEY CONTROL
MODIFIED STATE PLANE COORDINATES (FEET) - MONTANA 2500
SCALED TO GROUND AT POINT 304
BY SCALE FACTOR 1.000753

POINT	NORTHING	EASTING	ELEVATION	DESCRIPTION
51	992140.92	832940.71	3152.54	SET NAIL
52	992149.79	832505.60	3150.12	SET NAIL
53	991736.00	832459.36	3149.07	SET NAIL
54	991748.41	832257.95	3149.68	SET NAIL
55	991065.16	832028.04	3148.66	SET NAIL
56	991013.85	832370.54	3149.29	SET NAIL
57	991284.01	832617.67	3146.53	SET NAIL
58	991215.96	833419.67	3156.32	SET NAIL
59	991767.05	833415.70	3155.14	SET MAG NAIL IN CONCRETE
60	991947.37	833543.61	3152.64	SET MAG NAIL IN ASPHALT
61	992124.10	833471.77	3152.77	SET MAG NAIL IN ASPHALT
304	992117.08	833477.74	3152.23	FOUND 1 $\frac{1}{2}$" ALUMINUM CAP (AINSWORTH 2923S)

1/4	SEC	T	R
X	18	13N	19W
PRINCIPAL MERIDIAN OF MONTANA			
CITY OF MISSOULA			
MISSOULA COUNTY, MONTANA			

BASIS OF BEARINGS
GRID NORTH OF MONTANA STATE
PLANE COORDINATE SYSTEM
(FIPS 2500)
NAD83 (2011) (EPOCH 2010.00)
(GROUND DISTANCES SHOWN)

VERTICAL DATUM
NAVD 1988
MSOL CORS

SURVEY TIMELINE
INITIAL SURVEY DATE: MAY 9, 2024
PLOT DATE: JUNE 14, 2024

NOTE:
Awarded Contractor will be provided with the AutoCAD file for survey & locating purposes. Contractor will be responsible for accurately locating all new facility improvements.

Location and Survey Control Coordinates

80 40 0 80 160
Feet

N

Revision	Date	By
30% Draft	8/1/24	AE
60% Draft	11/18/24	AE
90% Draft	1/31/25	AE
Final	2/14/25	AE

Revision: Final
Plot Scale: 1:2
Drawn By: A.Eckhart, P.E.
Approved By: P.Montgomery, P.E.
Checked By: A.Eckhart, P.E.
Designed By: P.Montgomery, P.E.

Engineer
Anderson~Montgomery
CONSULTING ENGINEERS
1064 N. Warren
Helena, MT 59601
Phone (406) 449-3303

Owner
City Of Missoula

Project Title
Garden City Compost Facility Improvements

Sheet Title
Location and Survey Control Coordinates

Sheet
G-8

X:\MISSOULA COMPOST\DESIGN\DRAWINGS\Sheets\1 - General\G-8 Location and Survey Control Coordinates.dwg SAVED: 2/3/25 PRINTED: 2/11/25 BY: ADAM

GENERAL NOTES:

1. CONTRACTOR TO OBTAIN ALL REQUIRED PERMITS FOR CONSTRUCTION, DEWATERING AND STORMWATER DISCHARGES.
2. AS CONSTRUCTED ELEVATIONS SHALL BE WITHIN 0.08' OF ELEVATION SPECIFIED ON THE PLAN DRAWINGS.
3. CONTRACTOR SHALL PROTECT AND PRESERVE ALL EXISTING SITE FEATURES (INCLUDING VEGETATION, SURFACES, STRUCTURES, SURVEY MONUMENTATION, ETC.) TO THE GREATEST EXTENT POSSIBLE DURING CONSTRUCTION. ANY DAMAGE TO EXISTING SITE FEATURES SHALL BE REPAIRED TO ORIGINAL OR BETTER CONDITION AT NO ADDITIONAL COST TO THE OWNER.
4. CONTRACTOR SHALL BE RESPONSIBLE FOR DETERMINING SEWER MAIN SIZE, MATERIAL TYPE, MANHOLE SIZE, MATERIALS AND CONDITION PRIOR TO INITIATION OF SEWER SYSTEM WORK.
5. CONTRACTOR SHALL BE RESPONSIBLE FOR PROPER DUST CONTROL DURING CONSTRUCTION.
6. CONTRACTOR MUST COMPLY WITH CITY OF MISSOULA REQUIREMENTS FOR CONSTRUCTION CONTRACTORS. SEE SPECIAL PROVISIONS.

NOTES FOR WATER AND SEWER MAINS:

1. THE OWNER AND RESIDENTS SHALL BE NOTIFIED PRIOR TO CHANGE OR DISRUPTION OF WATER OR SEWER SYSTEM OPERATION.
2. AERATION PIPING SHALL BE BUTT-FUSED HDPE DR17 UNLESS SPECIFICALLY CALLED OUT OTHERWISE IN THE PROJECT DRAWINGS.
3. SEWER MAIN PIPING SHALL BE DUCTILE IRON OR SDR-35 PVC SEWER PIPE.
4. ALL WATERMAIN AND FORCEMAIN FITTINGS, INCLUDING WYES, REDUCERS AND ELBOWS EQUAL TO OR GREATER THAN 22-1/2° SHALL BE RESTRAINED MECHANICAL JOINT. ALL MECHANICAL JOINT RESTRAINTS SHALL BE "MEGALUG", UNIFLANGE OR EQUAL. JOINT RESTRAINT SHALL BE IN ADDITION TO MEETING THRUST BLOCK REQUIREMENTS IN ACCORDANCE WITH THE PROJECT SPECIFICATIONS AND MPW STANDARD DRAWINGS 02660-1, AND 02660-3.
5. TRENCHES FOR THE INSTALLATION OF WATER MAINS AND SEWER MAINS SHALL BE PROPERLY BACKFILLED AS QUICKLY AS POSSIBLE, BUT NO MORE THAT 48-HOURS AFTER INITIAL DIGGING.
6. WHEN WORKING NEAR AND/OR EXPOSING EXISTING UTILITIES AND SERVICE LINES, WORKERS SHALL UTILIZE HAND-DIGGING IN ORDER TO AVOID DAMAGE TO THOSE UTILITIES. IF DAMAGE OCCURS, THE COST OF REPAIR AND PENALTIES SHALL BE THE RESPONSIBILITY OF THE CONTRACTOR.

UTILITY NOTES:

1. THE ENGINEER HAS OBTAINED UNDERGROUND UTILITY INFORMATION FROM OWNERS OF THE UNDERGROUND FACILITIES AND INCLUDED THAT INFORMATION AS PART OF THESE PLANS. THIS UTILITY LOCATION INFORMATION IS APPROXIMATE AND MAY BE INCOMPLETE.
2. BEFORE BEGINNING AN EXCAVATION, THE CONTRACTOR SHALL NOTIFY, THROUGH ONE-CALL NOTIFICATION CENTER, ALL OWNERS OF UNDERGROUND FACILITIES IN THE AREA OF THE PROPOSED EXCAVATION. THE PHONE NUMBER IS: **1-800-424-5555 OR 811. WEBSITE: WWW.CALLBEFOREYOUDIG.ORG**
3. AFTER AN OWNER OF AN UNDERGROUND FACILITY HAS LOCATED AND MARKED THE UNDERGROUND FACILITIES, THE CONTRACTOR SHALL DETERMINE IF WEATHER, TIME, OR OTHER FACTORS MAY HAVE AFFECTED LOCATION MARKS, WARRANTING RELOCATION OF THE FACILITIES.
4. IF EXCAVATION HAS NOT OCCURRED WITHIN 30 DAYS OF THE LOCATE AND MARK, THE CONTRACTOR SHALL REQUEST THAT THE FACILITY BE RELOCATED AND REMARKED BEFORE EXCAVATING UNLESS OTHER ARRANGEMENTS HAVE BEEN MADE WITH THE UNDERGROUND FACILITY OWNER. THE CONTRACTOR IS RESPONSIBLE FOR ALL COSTS ASSOCIATED WITH RELOCATING AND REMARKING A FACILITY THAT IS NOT EXCAVATED WITHIN 30 DAYS OF THE LOCATE AND MARK.
5. THE CONTRACTOR MAY NOT BEGIN EXCAVATING BEFORE THE LOCATING AND MARKING IS COMPLETE OR BEFORE THE CONTRACTOR IS NOTIFIED THAT LOCATING AND MARKING IS UNNECESSARY.
6. THE CONTRACTOR SHALL LOCATE AND MARK THE AREA TO BE EXCAVATED IF REQUESTED BY THE UNDERGROUND FACILITY OWNER OR THEIR REPRESENTATIVE. IF THE CONTRACTOR DISCOVERS AN UNDERGROUND FACILITY THAT HAS NOT BEEN LOCATED AND MARKED, THE CONTRACTOR SHALL STOP EXCAVATING IN THE VICINITY OF THE FACILITY AND NOTIFY THE FACILITY OWNER OR THE ONE-CALL NOTIFICATION CENTER. IF THIS OCCURS THE CONTRACTOR SHALL PROCEED WITH OTHER ELEMENTS OF THE PROJECT, AT NO COST TO THE PROJECT OWNER, UNTIL THE UNDERGROUND FACILITY OWNER HAS NOTIFIED THE CONTRACTOR THAT EXCAVATION CAN PROCEED.

Revision	Date	By
30% Draft	8/1/24	AE
60% Draft	11/18/24	AE
90% Draft	1/31/25	AE
Final	2/14/25	AE

Revision: Final
Plot Scale: 1:2
Drawn By: A.Eckhart, P.E.
Approved By: P.Montgomery, P.E.
Checked By: A.Eckhart, P.E.
Designed By: P.Montgomery, P.E.

Engineer:
Anderson~Montgomery
CONSULTING ENGINEERS
1064 N. Warren
Helena, MT 59601
Phone (406) 449-3303

Owner: City Of Missoula

Project Title: Garden City Compost Facility Improvements

Sheet Title: **General Project Notes**

Sheet: **G-9**

X:\MISSOULA COMPOST\DESIGN\DRAWINGS\Sheets\1 - General\G-9 General Project Notes.dwg SAVED: 2/5/25 PRINTED: 2/11/25 BY: ADAM

INSTRUMENT IDENTIFICATION

EXAMPLE SYMBOLS

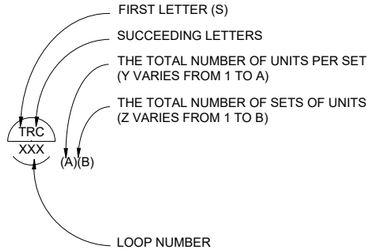

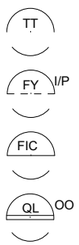

FIELD MOUNTED INSTRUMENT

REAR-OF-PANEL MOUNTED INSTRUMENT

PANEL MOUNTED INSTRUMENT

MOTOR CONTROL CENTER MOUNTED INSTRUMENT

SPECIAL CASES

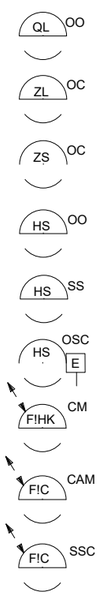

ON AND OFF EVENT LIGHTS

OPENED AND CLOSED POSITION LIGHTS

OPENED AND CLOSED POSITION SWITCHES

ON-OFF HAND SWITCH. MAINTAINED CONTACT SWITCH (CONTROLLED DEVICE WILL RESTART ON RETURN OF POWER AFTER POWER FAILURE).

STOP-START HAND SWITCH MOMENTARY CONTACT SWITCHES (CONTROLLED DEVICE WILL NOT RESTART ON RETURN OF POWER AFTER POWER FAILURE).

ELECTRIC ACTUATOR WITH INTEGRAL OPEN-STOP-CLOSE MOMENTARY CONTACT CONTROL SWITCH

FLOW INDICATING, COMPUTER/MANUAL CONTROL STATION

FLOW INDICATING, COMPUTER/AUTO/MANUAL CONTROL STATION

FLOW INDICATING SUPERVISORY SET POINT (BY COMPUTER) , AUTO/MANUAL CONTROL STATION

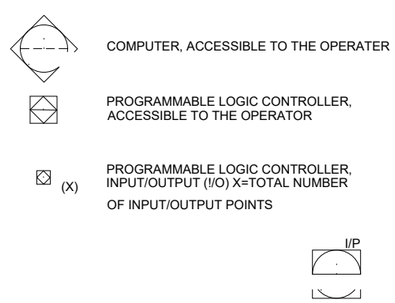

COMPUTER, ACCESSIBLE TO THE OPERATER

PROGRAMMABLE LOGIC CONTROLLER, ACCESSIBLE TO THE OPERATOR

PROGRAMMABLE LOGIC CONTROLLER, INPUT/OUTPUT (!/O) X=TOTAL NUMBER OF INPUT/OUTPUT POINTS

TRANSDUCERS

A	ANALOG	I	CURRENT
D	DIGITAL	P	PNEUMATIC
E	VOLTAGE	PF	PULSE FREQUENCY
F	FREQUENCY	PD	PULSE DURATION
H	HYDRAULIC	R	RESISTANCE

EXAMPLE:

CURRENT TO PNEUMATIC TRANSDUCER (BACK OF PANEL, IN A FLOW LOOP)

INSTRUMENT SOCIETY OF AMERICA TABLE

LETTER	FIRST LETTER (S)		SUCCEEDING LETTERS		
	PROCESS OR INITIATING VARIABLE	MODIFIER	READOUT OR PASSIVE FUNCTION	OUTPUT FUNCTION	MODIFIER
A	ANALYSIS (+)		ALARM		
B	BURNER FLAME		USERS CHOICE (+)	USERS CHOICE (+)	USERS CHOICE (+)
C	CONDUCTIVITY			CONTROL	
D	DENSITY (S.G)	DIFFERENTIAL			
E	VOLTAGE		PRIMARY ELEMENT		
F	FLOW RATE	RATIO			
G	GAUGE		GLASS	GATE	
H	HAND (MANUAL)				HIGH
I	CURRENT		INDICATE		
J	POWER	SCAN			
K	TIME OR SCHEDULE			CONTROL STATION	
L	LEVEL		LIGHT (PILOT)		LOW
M	MOTION				MIDDLE
N	USERS CHOICE (+)		USERS CHOICE (+)	USERS CHOICE (+)	USERS CHOICE (+)
O	USERS CHOICE (+)		ORIFICE		
P	PRESSURE (OR VACUUM)		POINT (TEST CONNECTION)		
Q	QUANTITY OR EVENT(+)	INTEGRATE	INTEGRATE		
R			RECORD OR PRINT		
S	SPEED OR FREQUENCY	SAFETY		SWITCH	
T	TEMPERATURE			TRANSMIT	
U	MULTIVARIABLE (+)		MULTIFUNCTION (+)	MULTIFUNCTION (+)	MULTIFUNCTION (+)
V	VISCOSITY			VALVE OR DAMPER	
W	WEIGHT OR FORCE		WELL		
X	UNCLASSIFIED (+)		UNCLASSIFIED (+)	UNCLASSIFIED (+)	UNCLASSIFIED (+)
Y	USERS CHOICE (+)			RELAY OR COMPUTE (+)	
Z	POSITION			DRIVE, ACTUATE OR UNCLASSIFIED FINAL CONTROL ELEMENT	

(+) WHEN USED, EXPLANATION IS SHOWN ADJACENT TO INSTRUMENT SYMBOL. SEE ABBREVIATIONS AND LETTER SYMBOLS.

LINE LEGEND

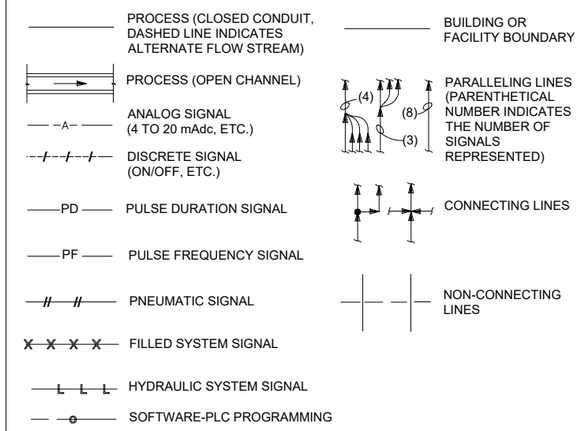

PROCESS (CLOSED CONDUIT, DASHED LINE INDICATES ALTERNATE FLOW STREAM)

BUILDING OR FACILITY BOUNDARY

PROCESS (OPEN CHANNEL)

PARALLELING LINES (PARENTHETICAL NUMBER INDICATES THE NUMBER OF SIGNALS REPRESENTED)

ANALOG SIGNAL (4 TO 20 mAdc, ETC.)

DISCRETE SIGNAL (ON/OFF, ETC.)

CONNECTING LINES

PULSE DURATION SIGNAL

PULSE FREQUENCY SIGNAL

PNEUMATIC SIGNAL

NON-CONNECTING LINES

FILLED SYSTEM SIGNAL

HYDRAULIC SYSTEM SIGNAL

SOFTWARE-PLC PROGRAMMING

INTERFACE SYMBOLS

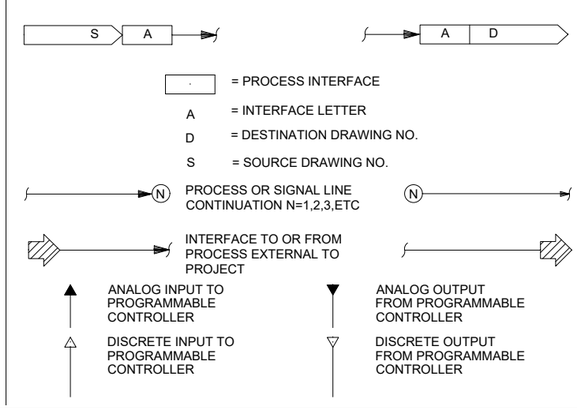

= PROCESS INTERFACE

A = INTERFACE LETTER

D = DESTINATION DRAWING NO.

S = SOURCE DRAWING NO.

PROCESS OR SIGNAL LINE CONTINUATION N=1,2,3,ETC

INTERFACE TO OR FROM PROCESS EXTERNAL TO PROJECT

ANALOG INPUT TO PROGRAMMABLE CONTROLLER

ANALOG OUTPUT FROM PROGRAMMABLE CONTROLLER

DISCRETE INPUT TO PROGRAMMABLE CONTROLLER

DISCRETE OUTPUT FROM PROGRAMMABLE CONTROLLER

ABBREVIATIONS & LETTER SYMBOLS

AC	ALTERNATING CURRENT
ACK	ACKNOWLEDGE ALARM
ALKY	ALKALINITY
AM	AUTO-MANUAL
CAM	COMPUTER-AUTO-MANUAL
CCS	CENTRAL CONTROL SYSTEM
CL_2 etc.	CHLORINE (TYPICAL: USE STANDARD CHEMICAL ELEMENT ABBREVIATION)
CM	COMPUTER-MANUAL
COD	CHEMICAL OXYGEN DEMAND
CP-X	CONTROL PANEL NO. X
DC	DIRECT CURRENT
DO	DISSOLVED OXYGEN
D	DRAIN
FA	FOUL AIR
FCL_2	FREE CHLORINE RESIDUAL
FOS	FAST-OFF-SLOW
FOSA	FAST-OFF-SLOW-AUTO
FOSR	FAST-OFF-SLOW-REMOTE
FP-W-X	FIELD PANEL NO. WX (W = UNIT PROCESS NUMBER X = PANEL NUMBER)
FR	FORWARD-REVERSE
HDNS	HARDNESS
HOA	HAND-OFF-AUTO
HOR	HAND-OFF-REMOTE
LEL	LOWER EXPLOSIVE LIMIT
LOS	LOCKOUT STOP
LR	LOCAL-REMOTE
MA	MANUAL-AUTO
MBAS	METHYLENE BLUE ACTIVE SUBSTANCES
MC	MODULATE-CLOSE
MCC-X	MOTOR CONTROL CENTER NO. X
OC	OPEN-CLOSE (D)
OCR	OPEN-CLOSE-REMOTE
OCA	OPEN-CLOSE-AUTO
OO	ON-OFF
OOA	ON-OFF-AUTO
OOR	ON-OFF-REMOTE
OP	ORTHO PHOSPHORUS
ORP	OXIDATION REDUCTION POTENTIAL
OSC	OPEN-STOP-CLOSE
pH	HYDROGEN ION CONCENTRATION
RM-X	REMOTE MULTIPLEXING MODULE NO. X
RTU-X	REMOTE TELEMETRY UNIT NO. X
SF	SLOWER-FASTER
SS	START-STOP
SSC	SUPERVISORY SET POINT CONTROL
TCL_2	TOTAL CHLORINE RESIDUAL
TOC	TOTAL ORGANIC CARBON
TOD	TOTAL OXYGEN DEMAND
TURB	TURBIDITY
UD	UP-DOWN
VHC	VOLATILE HYDROCARBONS
VIB	VIBRATION
Δ	DIFFERENCE
Σ	SUM
X	MULTIPLY
$\div$	DIVIDE
f(x)	CHARACTERIZED
X^n	RAISE TO THE Nth POWER
$\sqrt{\ }$	SQUARE ROOT
AVG	AVERAGE
1:1	REPEAT OR BOOST
>	SELECT HIGHEST SIGNAL
<	SELECT LOWEST SIGNAL
	BIAS
%	GAIN OR ATTENUATE

GENERAL NOTES

1. COMPONENTS AND PANELS SHOWN WITH A SINGLE ASTERISK (*) ARE TO BE PROVIDED AS PART OF A PACKAGE SYSTEM.
2. COMPONENTS SHOWN WITH DOUBLE ASTERISK (**) TO BE FURNISHED UNDER DIVISION 16, ELECTRICAL.
3. THIS IS A STANDARD LEGEND, THEREFORE, NOT ALL OF THIS INFORMATION MAY BE USED ON THIS PROJECT.

MONTANA KATHLEEN KLACIK No. 72593 PE LICENSED PROFESSIONAL ENGINEER
2/12/25

Revision	Date	By
30% Draft	8/1/24	AE
60% Draft	11/18/24	AE
90% Draft	1/31/25	AE
Final	2/14/25	AE

Revision: Final
Plot Scale: 1:2
Drawn By: A.Eckhart, P.E.
Approved By: Paul Montgomery, P.E.
Approved By: Katie Klacik, P.E.
Checked By: Michael Montoya, P.E.
Designed By: Kathleen Hutchinson

Engineer
Anderson~Montgomery CONSULTING ENGINEERS
1064 N. Warren
Helena, MT 59601
Phone (406) 449-3303

Jacobs
999 Main Street
STE. 1200
Boise, ID 83702
Phone (406) 212-4520

Owner: City Of Missoula

Project Title: Garden City Compost Facility Improvements

Sheet Title: **PID Symbols and Legend**

Sheet: **PID-1**

X:\MISSOULA COMPOST\DESIGN\DRAWINGS\Sheets\2 - P&ID\PID-1.dwg SAVED: 2/13/25 PRINTED: 2/14/25 BY: ADAM

VALVE SYMBOLS

- AIR DAMPER (XX)
- GATE
- KNIFE GATE (K)
- BUTTERFLY (XX)
- GLOBE
- BALL
- VEE- BALL (V)
- PLUG
- ECCENTRIC PLUG (SEAT PORT)
- DIAPHRAGM
- PINCH
- NEEDLE
- SWING CHECK
- BALL CHECK
- SAMPLE (S)
- MUD
- PRESSURE RELIEF
- AIR AND / OR VACUUM RELEASE
- REGULATED SIDE PRESSURE CONTROL
- MULTI-PORT VALVES (BALL VALVE SHOWN. FOR OTHER VALVE TYPES, APPROPRIATE VALVE SYMBOL SHOWN.) ARROWS INDICATE FLOW PATTERN. SEAT PORTS ARE IMPLIED BY INDICATED FLOW PATTERN.
- THREE-WAY DIVERTER VALVE
- SPLIT DISK CHECK VALVE

NOTE:
XX NO = NORMALLY OPEN
NC = NORMALLY CLOSED

GATE SYMBOLS

- SLUICE
- BUTTERFLY
- FLAP
- FABRICATED SLIDE
- SHEAR

ACTUATOR SYMBOLS

- PNEUMATIC W/POSITIONER (P Z XX)
- PNEUMATIC W/SOLENOID (P S XX)
- ELECTRIC (E XX)
- ELECTRIC W/POSITIONER (E Z XX)
- ELECTROHYDRAULIC (EH XX)
- HYDRAULIC (H XX)
- PNEUMATIC WITH VOLUME BOOSTER (P B XX)
- SOLENOID (S)
- MANUAL

NOTE:
ON LOSS OF PRIMARY POWER (PNEUMATIC, ELECTRICAL OR HYDRAULIC)
XX: FO =FAIL OPEN
FC =FAIL CLOSED
FLP=FAIL TO LAST POSITION

PRIMARY ELEMENT SYMBOLS

- PARSHALL FLUME
- WEIR
- ORFICE PLATE
- FLOW TUBE
- PITOT-STATIC (J)
- VORTEX METER
- ROTAMETER
- ULTRASONIC FLOWMETER (INLINE)
- ELECTROMAGNETIC FLOWMETER (M)
- PROPELLER OR TURBINE METER
- DENSITY METER (DE) (X: N = NUCLEAR, O = OPTICAL, U = ULTRASONIC)
- ULTRASONIC FLOWMETER (CLAMP-ON)
- LEVEL (ULTRASONIC) (LE)
- LEVEL (BUBBLER TUBE)
- LEVEL (FLOAT) (LS)
- AIR MASS FLOWMETER

MISCELLANEOUS SYMBOLS

- SIGHT GLASS
- DIAPHRAGM SEAL
- BLIND FLANGE
- AIR GAP
- VENT TO ATMOSPHERE (V)
- AERATOR
- PLUG
- RECEPTACLE
- SELF CONTAINED AIR SUPPLY (A)
- COMPOSITE SAMPLER (DIPPER TYPE) (SD, D)
- COMPOSITE SAMPLER (SUCTION TYPE) (SS)
- TV CAMERA (TV)
- RADIO ANTENNA
- "ON" TIME DELAY B "ON" X-SEC. AFTER A "ON". INSTANT "OFF". (A, ON-TD X-SEC, B)
- "OFF TIME DELAY B "OFF" X-SEC. AFTER A "OFF" INSTANT "ON" (OFF-TD X-SEC)
- OR INTERLOCK. SEE CONTROL DIAGRAMS (I)
- MEMORY ELEMENT S= SET , R= RESET (A, B, S, R, C)
- PURGE SET X: W = WATER, A = AIR (XP)
- XX INSTRUMENT AIR SET XX= SUPPLY PRESSURE IN PSIG.
- FILTER/ REGULATOR/ GAUGE SET
- WATER-AIR TRAP (T)
- CALIBRATION COLUMN
- FOUL-AIR TRAP
- 120V 120 VOLT, 60 HZ POWER
- 480V 480 VOLT, 60 HZ POWER
- ANNULAR DIAPHRAGM SEAL
- RUPTURE DISK
- PIG INSERT POINT
- OR PIG CATCH POINT
- OR MIXER (M)
- ELECTRIC MOTOR (M)
- PRESSURE GAUGE
- TONE TRANSMITTER NO. X (X)
- TONE RECEIVER NO. X (X)
- VOICE COMMUNICATION POINT
- TV MONITOR (TV)
- LOGIC ELEMENT: IF A AND NOT B THEN C (A, B, AND, C)
- LOGIC ELEMENT: IF A OR B THEN C (A, B, OR, C)
- ON/OFF RELAY. INPUT IS CONNECTED TO OUTPUT WHEN SWITCHING SIGNAL IS PRESENT. (S, R)
- SWITCHING SIGNAL
- SWITCHING RELAY. INPUT WITH DOT IS CONNECTED TO OUTPUT WHEM SWITCHING SIGNAL IS PRESENT (S, R)
- OTHER INPUT IS CONNECTED TO OUTPUT WHEN SWITCHING SIGNAL IS NOT PRESENT.
- FLUSHING CONNECTION/ SAMPLE PORT (F)
- HOSE ADAPTOR
- SEAL WATER SET (S)
- SIGHT FLOW GAUGE
- PULSATION DAMPENER (P)
- QUICK DISCONNECT
- FILTER

PUMP AND COMPRESSOR SYMBOLS

NOTE: XX: AS = ADJUSTABLE SPEED
CS-1 = CONSTANT SPEED (SINGLE SPEED)
CS-2 = CONSTANT SPEED (TWO SPEED)

- CENTRIFUGAL PUMP (DRY PIT) (XX)
- CHEMICAL FEED PUMP (XX)
- DIAPHRAGM PUMP (XX)
- PISTON PUMP (XX)
- PROGRESSIVE CAVITY PUMP (XX)
- SUBMERSIBLE SUMP PUMP (XX)
- COMPRESSOR (PISTON) (XX)
- EJECTOR

CONTROL DIAGRAM SYMBOLS

- CONTROL DEVICE (X)
  X: M = MOTOR STARTER COIL
  S = SOLENOID COIL
  C = RELAY COIL
  T = TIMER
  D = TIME DELAY RELAY
- MISCELLANEOUS EQUIPMENT
- CONTACT NORMALLY OPEN
- CONTACT NORMALLY CLOSED
- GROUND
- HORN
- FIELD COMPONETS
- START — PUSH BUTTON-MOMENTARY SPRING RETURN (OPEN CIRCUIT)
- STOP — PUSH BUTTON-MOMENTARY SPRING RETURN (OPEN CIRCUIT)
- ON OFF AUTO X00 00X — SELECTOR SWITCH MAINTAINED (CONTACT BLOCK CONSTRUCTION)
- OPEN CLOSE — PUSHBUTTON-MAINTAINED MECHANICAL INTERLOCK
- ON OFF AUTO — SELECTOR SWITCH MAINTAINED
- INDICATING LIGHT (Y)
- INDICATING LIGHT PUSH-TO-TEST (Y)
  Y= A - AMBER
  B - BLUE
  G - GREEN
  R - RED
- JUNCTION OF CONNECTED PATHS
- CROSSING OF CONDUCTORS NOT CONNECTED
- ANTENNA
- SOLID LINE DENOTES PANEL WIRING
- DASHED LINE DENOTES FIELD WIRING
- TIMER CONTACT- OPENS AT END OF TIME CYCLE (XX)
- TIMER CONTACT- OPENS AT END OF TIME CYCLE (XX)
- TIME DELAY RELAY CONTACT- NORMALLY OPEN (XX)
- TIME DELAY RELAY CONTACT- NORMALLY CLOSED (XX)
  XX:
  TO= TIME TO OPEN
  TC= TIME TO CLOSE
  TDO= TIME DELAY OPENING
  INST= INSTANTANEOUS

FIELD COMPONENTS

- LEVEL SWITCH OPENS ON RISING LEVELS
- LEVEL SWITCH CLOSES ON RISING LEVELS
- PRESSURE OR VACUUM SWITCH OPENS ON RISING PRESSURE
- PRESSURE OR VACUUM SWITCH CLOSES ON RISING PRESSURE
- FLOW SWITCH OPENS ON INCREASING FLOW
- FLOW SWITCH CLOSES ON INCREASING FLOW
- FLOW SWITCH OPENS ON RISING TEMPERATURES
- FLOW SWITCH CLOSES ON RISING TEMPERATURES
- LIMIT SWITCH NORMALLY CLOSED CIRCUIT
- LIMIT SWITCH NORMALLY OPEN CIRCUIT

NOTE:
THIS IS A STANDARD LEGEND SHEET. SOME SYMBOLS OR ABBREVIATIONS MAY APPEAR ON THIS SHEET AND NOT ON THE PLANS.

MONTANA KATHLEEN KLACIK No. 72593 PE LICENSED PROFESSIONAL ENGINEER 2/12/25

Revision	Date	By
30% Draft	8/1/24	AE
60% Draft	11/18/24	AE
90% Draft	1/31/25	AE
Final	2/14/25	AE

Revision: Final
Plot Scale: 1:2
Drawn By: A.Eckhart, P.E.
Approved By: Paul Montgomery, P.E.
Approved By: Katie Klacik, P.E.
Checked By: Michael Montoya, P.E.
Designed By: Kathleen Hutchinson

Engineer
Anderson~Montgomery CONSULTING ENGINEERS
1064 N. Warren
Helena, MT 59601
Phone (406) 449-3303

Jacobs
999 Main Street
STE. 1200
Boise, ID 83702
Phone (406) 212-4520

Owner: City Of Missoula

Project Title: Garden City Compost Facility Improvements

Sheet Title: **PID Symbols and Legend**

Sheet: **PID-2**

X:\MISSOULA COMPOST\DESIGN\DRAWINGS\Sheets\2 - P&ID\PID-2.dwg SAVED: 2/13/25 PRINTED: 2/14/25 BY: ADAM

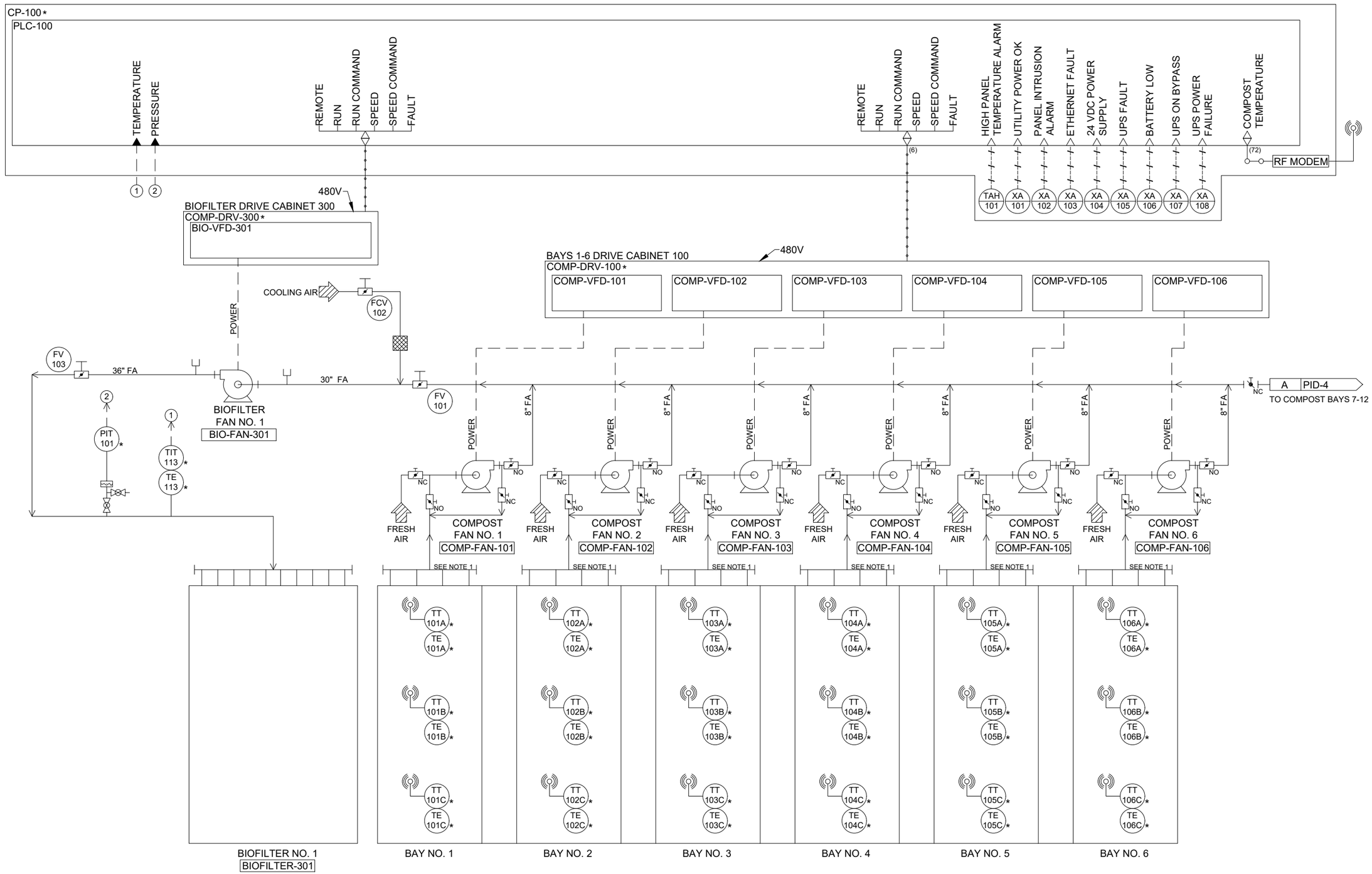

GENERAL SHEET NOTES:
1. SEE MECHANICAL SHEETS FOR CONDENSATE COLLECTION PIPING LAYOUT.

MONTANA KATHLEEN KLACIK No. 72593 PE LICENSED PROFESSIONAL ENGINEER
2/12/25

Revision	Date	By
30% Draft	8/1/24	AE
60% Draft	11/18/24	AE
90% Draft	1/31/25	AE
Final	2/14/25	AE

Revision: Final
Plot Scale: 1:2
Drawn By: A.Eckhart, P.E.
Approved By: Paul Montgomery, P.E.
Approved By: Katie Klacik, P.E.
Checked By: Michael Montoya, P.E.
Designed By: Kathleen Hutchinson

Engineer
Anderson~Montgomery CONSULTING ENGINEERS
1064 N. Warren
Helena, MT 59601
Phone (406) 449-3303

Jacobs
999 Main Street
STE. 1200
Boise, ID 83702
Phone (406) 212-4520

Owner
City Of Missoula

Project Title
Garden City Compost Facility Improvements

Sheet Title
Compost Area No. 1 & Biofilter No. 1

Sheet
PID-3

X:\MISSOULA COMPOST\DESIGN\DRAWINGS\Sheets\2 - P&ID\PID-3.dwg SAVED: 2/13/25 PRINTED: 2/14/25 BY: ADAM

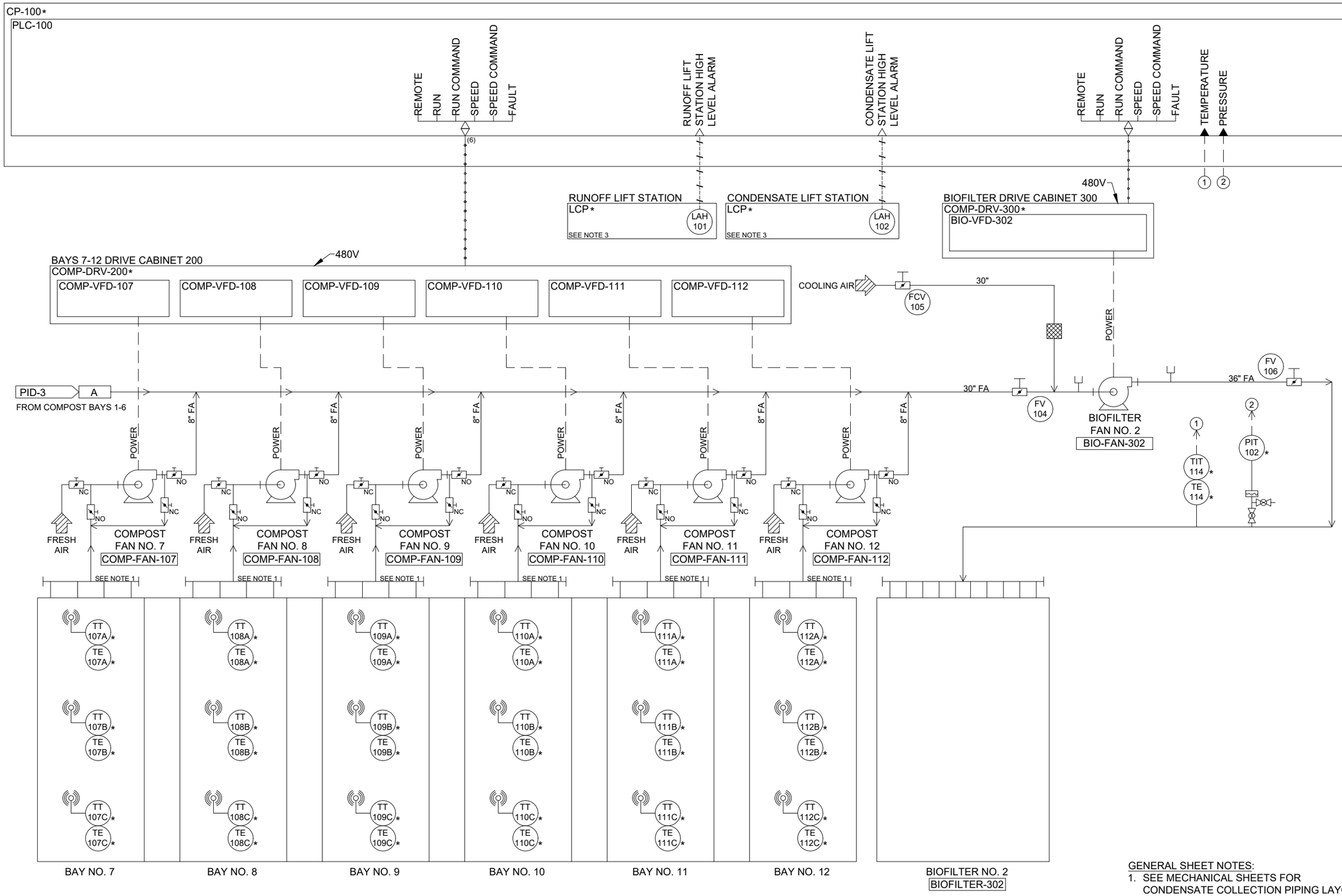

GENERAL SHEET NOTES:

1. SEE MECHANICAL SHEETS FOR CONDENSATE COLLECTION PIPING LAYOUT.
2. WIRELESS TEMPERATURE RECEIVER SHOWN ON PID-3.
3. PROVIDED WITH LIFT STATION PACKAGE.

MONTANA KATHLEEN KLACIK No. 72593 PE LICENSED PROFESSIONAL ENGINEER 2/12/25

Revision	Date	By
30% Draft	8/1/24	AE
60% Draft	11/18/24	AE
90% Draft	1/31/25	AE
Final	2/14/25	AE

Revision: Final
Plot Scale: 1:2
Drawn By: A.Eckhart, P.E.
Approved By: Paul Montgomery, P.E.
Approved By: Katie Klacik, P.E.
Checked By: Michael Montoya, P.E.
Designed By: Kathleen Hutchinson

Engineer
Anderson~Montgomery CONSULTING ENGINEERS
1064 N. Warren
Helena, MT 59601
Phone (406) 449-3303

Jacobs
999 Main Street
STE. 1200
Boise, ID 83702
Phone (406) 212-4520

Owner
City Of Missoula

Project Title
Garden City Compost Facility Improvements

Sheet Title
Compost Area No. 2 & Biofilter No. 2

Sheet
PID-4

X:\MISSOULA COMPOST\DESIGN\DRAWINGS\Sheets\2 - P&ID\PID-4.dwg SAVED: 2/13/25 PRINTED: 2/14/25 BY: ADAM

KEYED NOTES:
① - PROVIDED BY THE PIC SYSTEM SUPPLIER AND INSTALLED BY THE ELECTRICAL CONTRACTOR.
② - PROVIDED AND INSTALLED BY THE ELECTRICAL CONTRACTOR.

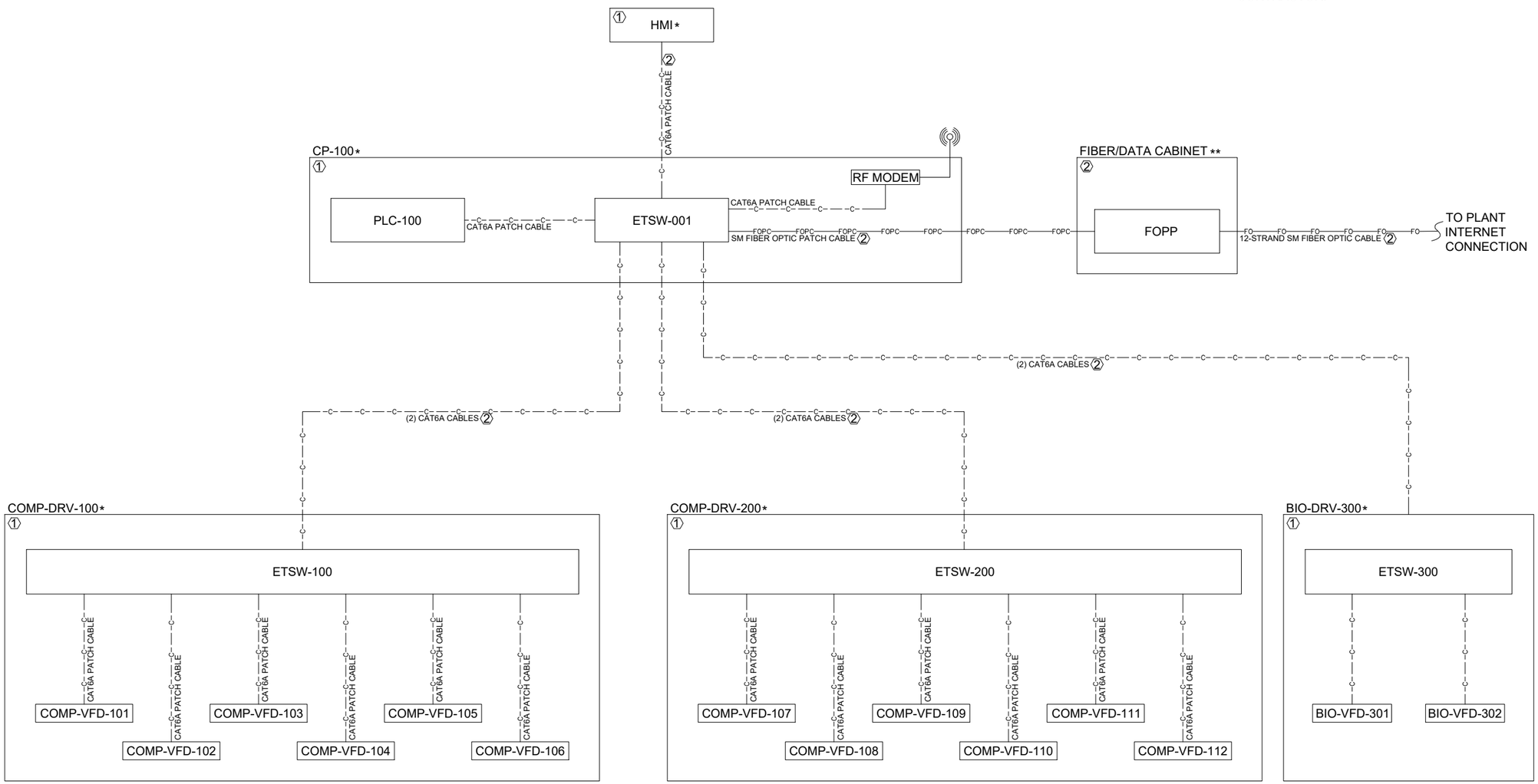

MONTANA KATHLEEN KLACIK No. 72593 PE LICENSED PROFESSIONAL ENGINEER
2/12/25

Revision	Date	By
30% Draft	8/1/24	AE
60% Draft	11/18/24	AE
90% Draft	1/31/25	AE
Final	2/14/25	AE

Revision: Final
Plot Scale: 1:2
Drawn By: A.Eckhart, P.E.
Approved By: Paul Montgomery, P.E.
Approved By: Katie Klacik, P.E.
Checked By: Michael Montoya, P.E.
Designed By: Kathleen Hutchinson

Engineer
Anderson~Montgomery CONSULTING ENGINEERS
1064 N. Warren
Helena, MT 59601
Phone (406) 449-3303

Jacobs
999 Main Street
STE. 1200
Boise, ID 83702
Phone (406) 212-4520

Owner
City Of Missoula

Project Title
Garden City Compost Facility Improvements

Sheet Title
Compost Area Network Diagram

Sheet
PID-5

X:\MISSOULA COMPOST\DESIGN\DRAWINGS\Sheets\2 - P&ID\PID-5.dwg SAVED: 2/13/25 PRINTED: 2/14/25 BY: ADAM

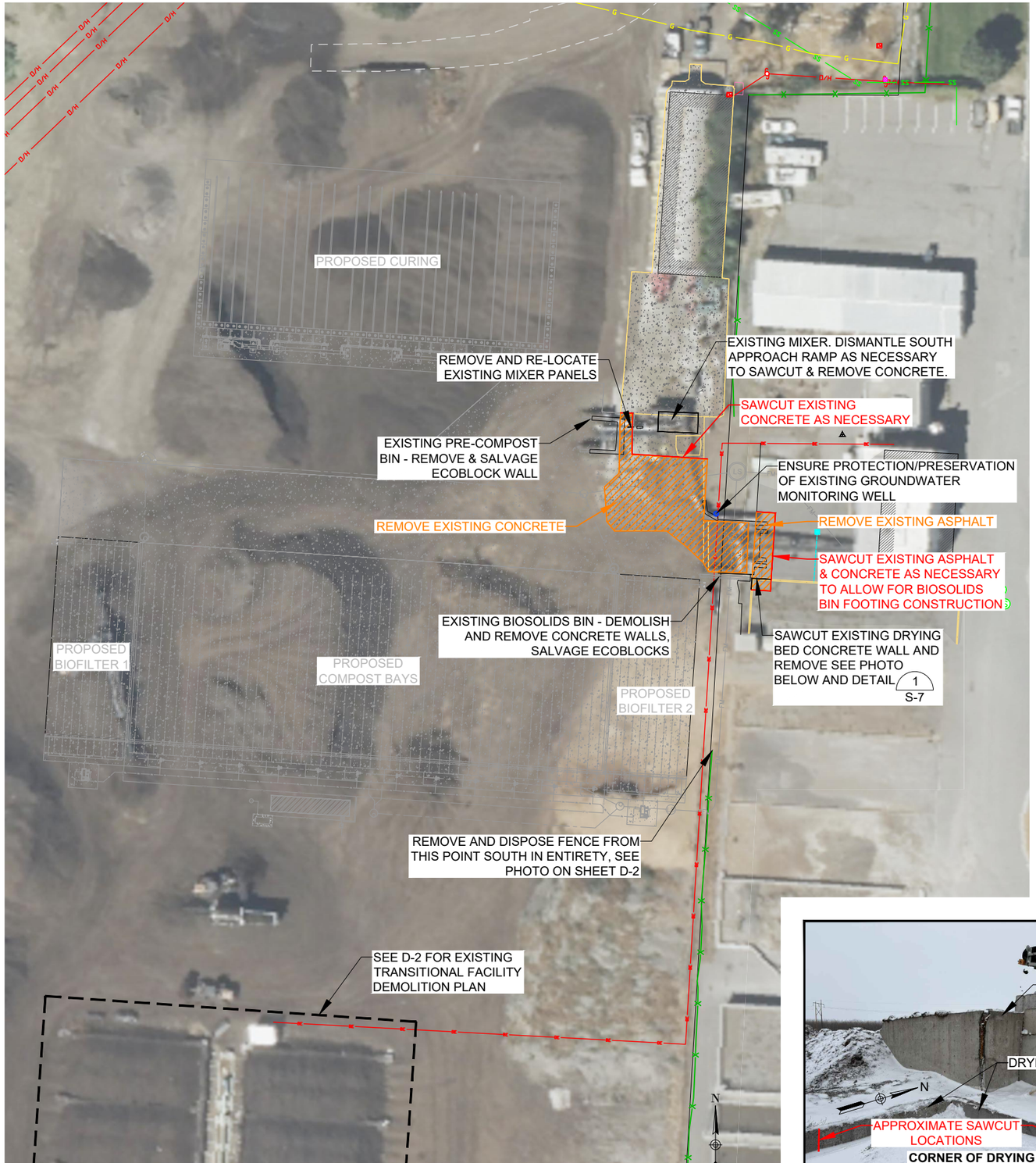

Demolition Site Plan

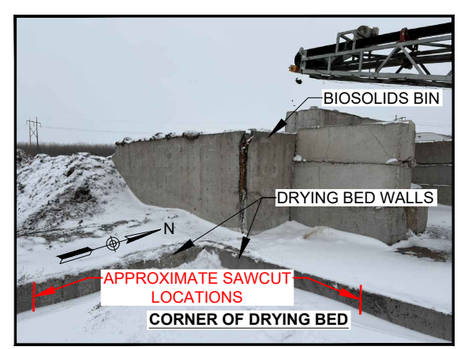

Revision	Date	By
30% Draft	8/1/24	AE
60% Draft	11/18/24	AE
90% Draft	1/31/25	AE
Final	2/14/25	AE

Revision: Final
Plot Scale: 1:2
Drawn By: A.Eckhart, P.E.
Approved By: P.Montgomery, P.E.
Checked By: A.Eckhart, P.E.
Designed By: P.Montgomery, P.E.

Engineer
Anderson~Montgomery CONSULTING ENGINEERS
1064 N. Warren
Helena, MT 59601
Phone (406) 449-3303

Owner
City Of Missoula

Project Title
Garden City Compost Facility Improvements

Sheet Title
Demolition Site Plan

Sheet
D-1

X:\MISSOULA COMPOST\DESIGN\DRAWINGS\Sheets\3 – Demolition\D-1 Demolition Site Plan.dwg SAVED: 2/5/25 PRINTED: 2/11/25 BY: ADAM

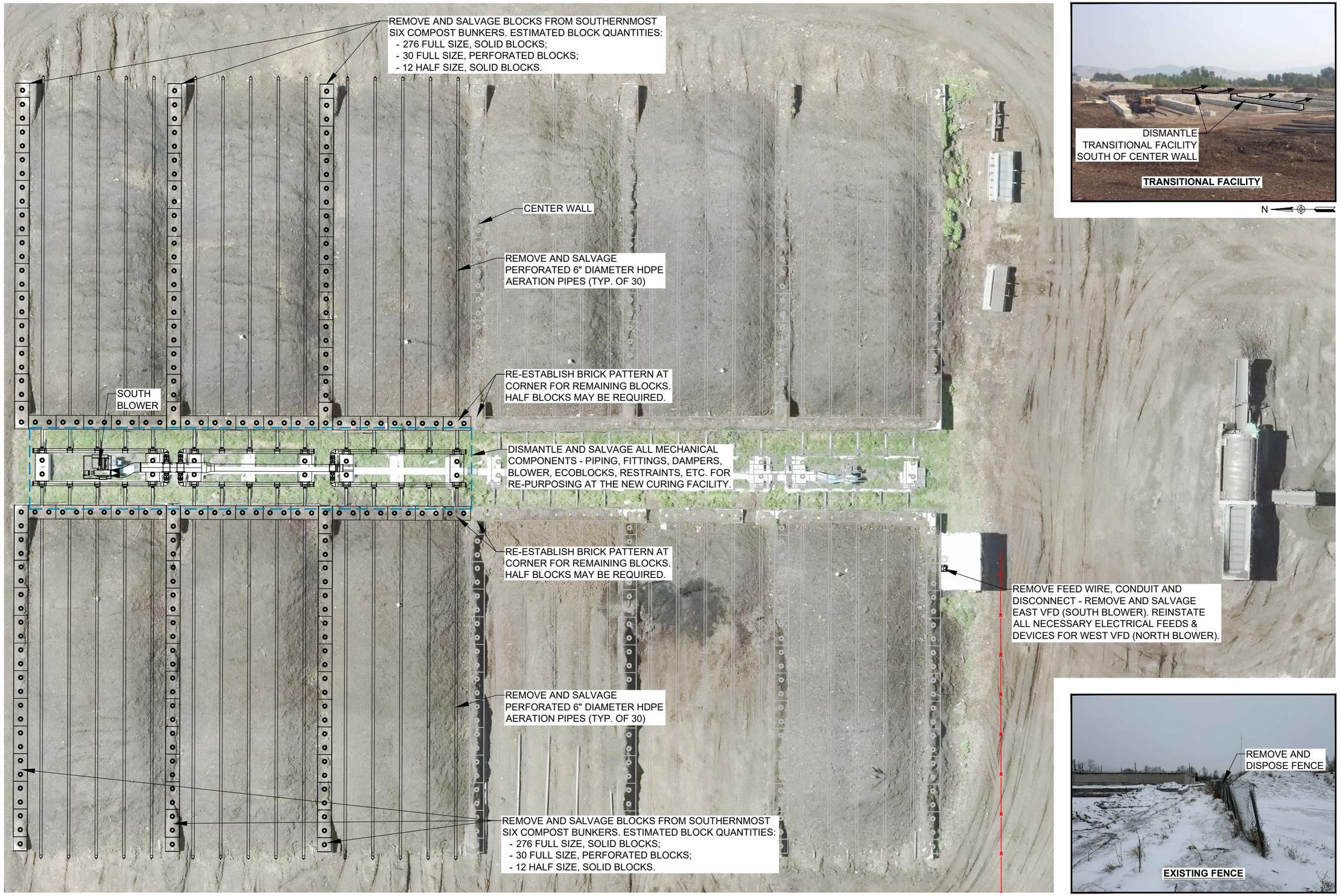

Transitional Facility Demolition & Salvage Site Plan

Revision	Date	By
30% Draft	8/1/24	AE
60% Draft	11/18/24	AE
90% Draft	1/31/25	AE
Final	2/14/25	AE

Revision: Final

Plot Scale: 1:2

Drawn By: A.Eckhart, P.E.

Approved By: P.Montgomery, P.E.

Checked By: A.Eckhart, P.E.

Designed By: P.Montgomery, P.E.

Engineer

Anderson~Montgomery
CONSULTING ENGINEERS
1064 N. Warren
Helena, MT 59601
Phone (406) 449-3303

Owner: City Of Missoula

Project Title: Garden City Compost Facility Improvements

Sheet Title: **Transitional Facility Demolition & Salvage Site Plan**

Sheet: **D-2**

X:\MISSOULA COMPOST\DESIGN\DRAWINGS\Sheets\3 – Demolition\D-2 Transitional Facility Demolition & Salvage Site Plan.dwg SAVED: 2/5/25 PRINTED: 2/11/25 BY: ADAM

NOTE:
OVERALL SITE GRADING PLAN SHOWN.
PLEASE SEE SHEETS C-2 & C-3 FOR
DETAILS ON THE GRADING PLAN

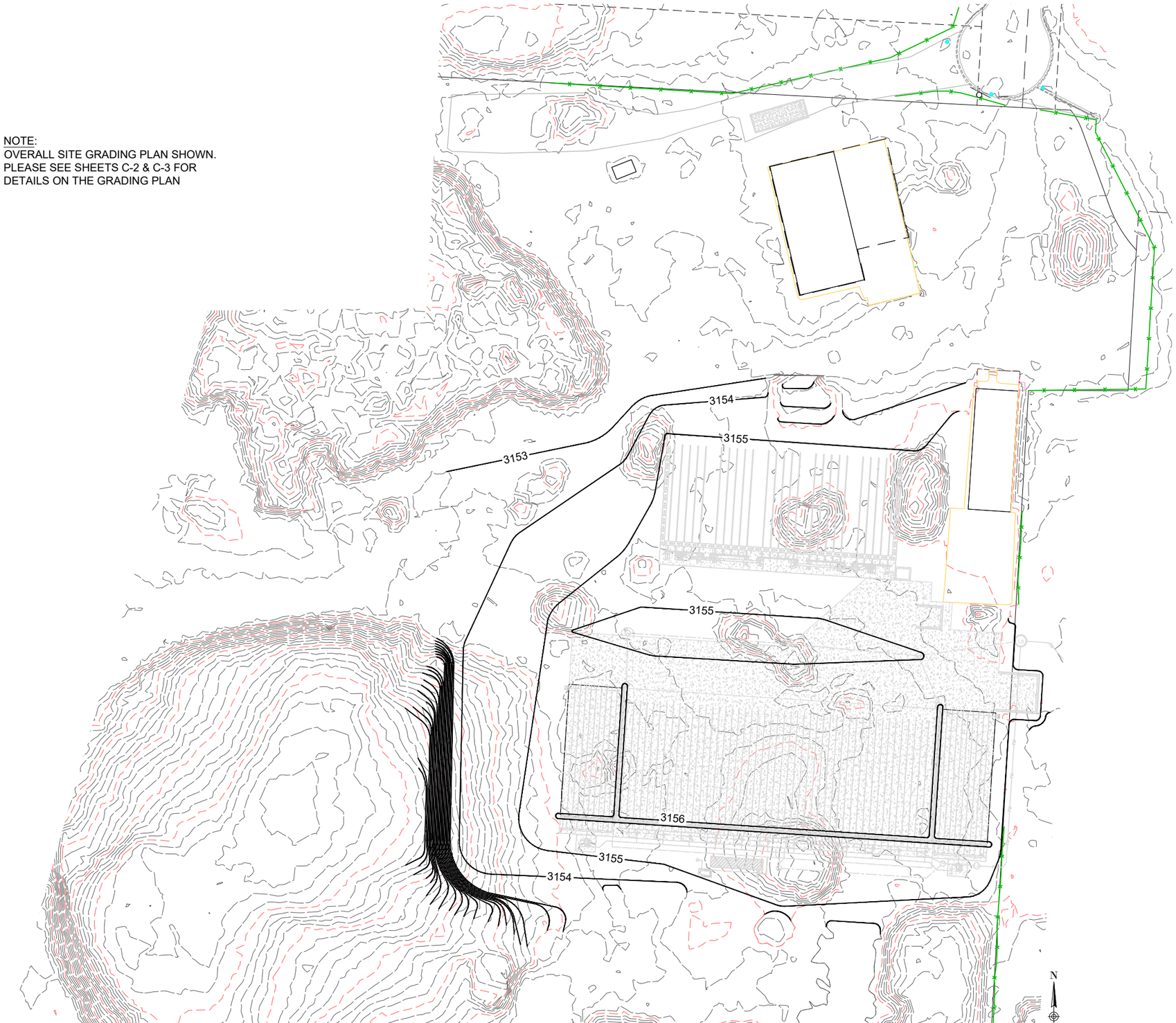

Grading Plan

Revision	Date	By
30% Draft	8/1/24	AE
60% Draft	11/18/24	AE
90% Draft	1/31/25	AE
Final	2/14/25	AE

Revision: Final
Plot Scale: 1:2
Drawn By: A.Eckhart, P.E.
Approved By: P.Montgomery, P.E.
Checked By: A.Eckhart, P.E.
Designed By: P.Montgomery, P.E.

Engineer
Anderson~Montgomery
CONSULTING ENGINEERS
1064 N. Warren
Helena, MT 59601
Phone (406) 449-3303

Owner
City Of Missoula

Project Title
Garden City Compost Facility Improvements

Sheet Title
Overall Grading Plan

Sheet
C-1

X:\MISSOULA COMPOST\DESIGN\DRAWINGS\Sheets\4 - Civil\C-1 Grading Plan.dwg SAVED: 2/3/25 PRINTED: 2/11/25 BY: ADAM

Grading Plan - North

Revision	Date	By
30% Draft	8/1/24	AE
60% Draft	11/18/24	AE
90% Draft	1/31/25	AE
Final	2/14/25	AE

Revision
Final

Plot Scale
1:2

Drawn By
A.Eckhart, P.E.

Approved By
P.Montgomery, P.E.

Checked By
A.Eckhart, P.E.

Designed By
P.Montgomery, P.E.

Engineer

Anderson~Montgomery
CONSULTING ENGINEERS

1064 N. Warren
Helena, MT 59601
Phone (406) 449-3303

Owner

City Of Missoula

Project Title

Garden City Compost Facility Improvements

Sheet Title

Grading Plan - North

Sheet

C-2

X:\MISSOULA COMPOST\DESIGN\DRAWINGS\Sheets\4 - Civil\C-2 & C-3 Grading Plan.dwg SAVED: 2/3/25 PRINTED: 2/11/25 BY: ADAM

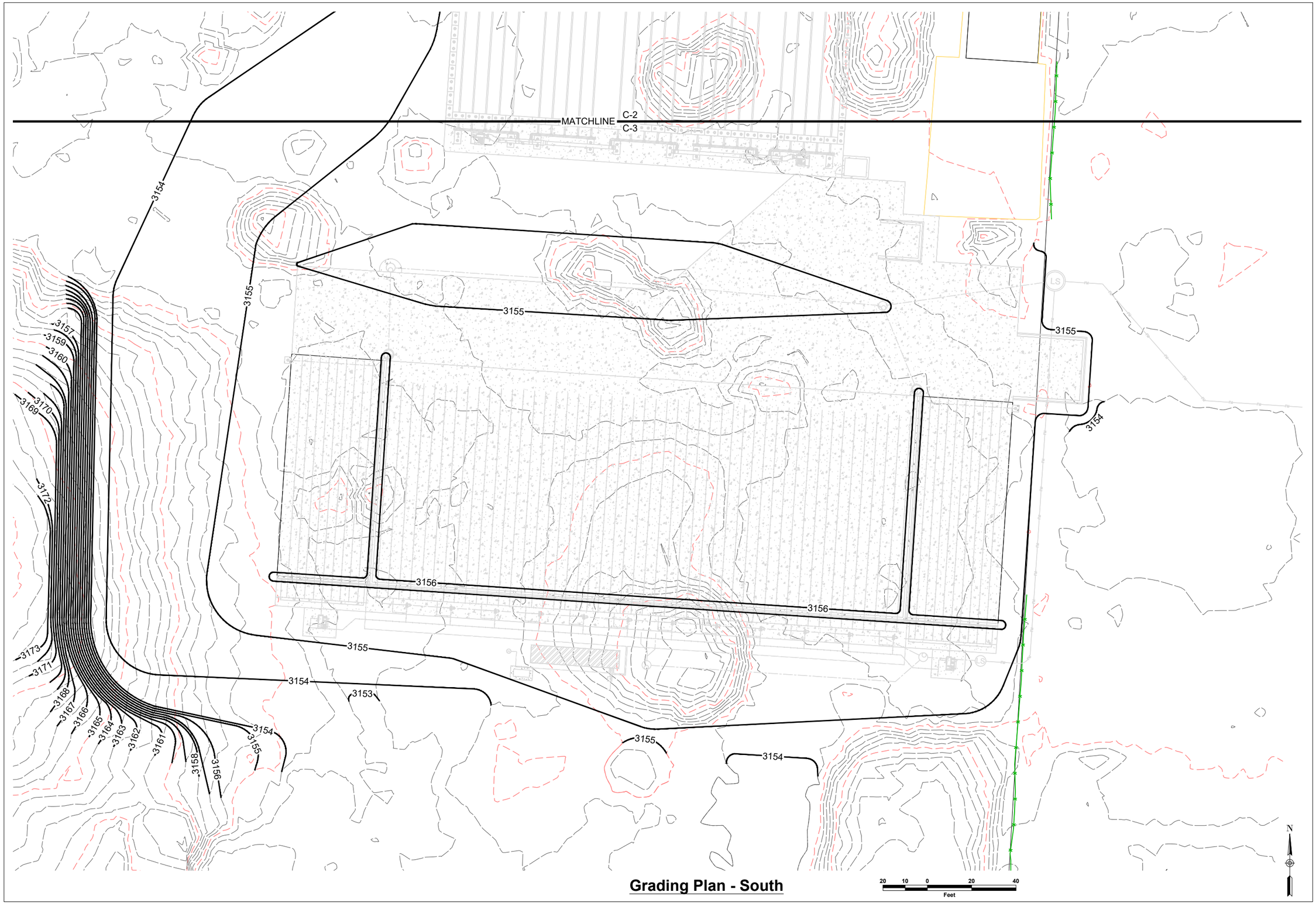

Grading Plan - South

Revision	Date	By
30% Draft	8/1/24	AE
60% Draft	11/18/24	AE
90% Draft	1/31/25	AE
Final	2/14/25	AE

Revision: Final

Plot Scale: 1:2

Drawn By: A.Eckhart, P.E.

Approved By: P.Montgomery, P.E.

Checked By: A.Eckhart, P.E.

Designed By: P.Montgomery, P.E.

Engineer

Anderson~Montgomery
CONSULTING ENGINEERS
1064 N. Warren
Helena, MT 59601
Phone (406) 449-3303

Owner: City Of Missoula

Project Title: Garden City Compost Facility Improvements

Sheet Title: **Grading Plan - South**

Sheet: **C-3**

X:\MISSOULA COMPOST\DESIGN\DRAWINGS\Sheets\4 - Civil\C-2 & C-3 Grading Plan.dwg SAVED: 2/3/25 PRINTED: 2/11/25 BY: ADAM

Site Plan

Revision	Date	By
30% Draft	8/1/24	AE
60% Draft	11/18/24	AE
90% Draft	1/31/25	AE
Final	2/14/25	AE

Revision: Final

Plot Scale: 1:2

Drawn By: A.Eckhart, P.E.

Approved By: P.Montgomery, P.E.

Checked By: A.Eckhart, P.E.

Designed By: P.Montgomery, P.E.

Engineer

Anderson~Montgomery
CONSULTING ENGINEERS
1064 N. Warren
Helena, MT 59601
Phone (406) 449-3303

Owner: City Of Missoula

Project Title: Garden City Compost Facility Improvements

Sheet Title: **Site Plan**

Sheet: **C-4**

X:\MISSOULA COMPOST\DESIGN\DRAWINGS\Sheets\4 - Civil\C-4 Site Plan.dwg SAVED: 2/3/25 PRINTED: 2/11/25 BY: ADAM

Rumble Grate Trough Site Plan

Revision	Date	By
30% Draft	8/1/24	AE
60% Draft	11/18/24	AE
90% Draft	1/31/25	AE
Final	2/14/25	AE

Revision
Final

Plot Scale
1:2

Drawn By
A.Eckhart, P.E.

Approved By
P.Montgomery, P.E.

Checked By
A.Eckhart, P.E.

Designed By
P.Montgomery, P.E.

Engineer

Anderson~Montgomery
CONSULTING ENGINEERS
1064 N. Warren
Helena, MT 59601
Phone (406) 449-3303

Owner
City Of Missoula

Project Title
Garden City Compost Facility Improvements

Sheet Title
Rumble Grate Trough Site Plan

Sheet
C-5

X:\MISSOULA COMPOST\DESIGN\DRAWINGS\Sheets\4 – Civil\C-5 Rumble Grate Trough Site Plan.dwg SAVED: 2/7/25 PRINTED: 2/11/25 BY: ADAM

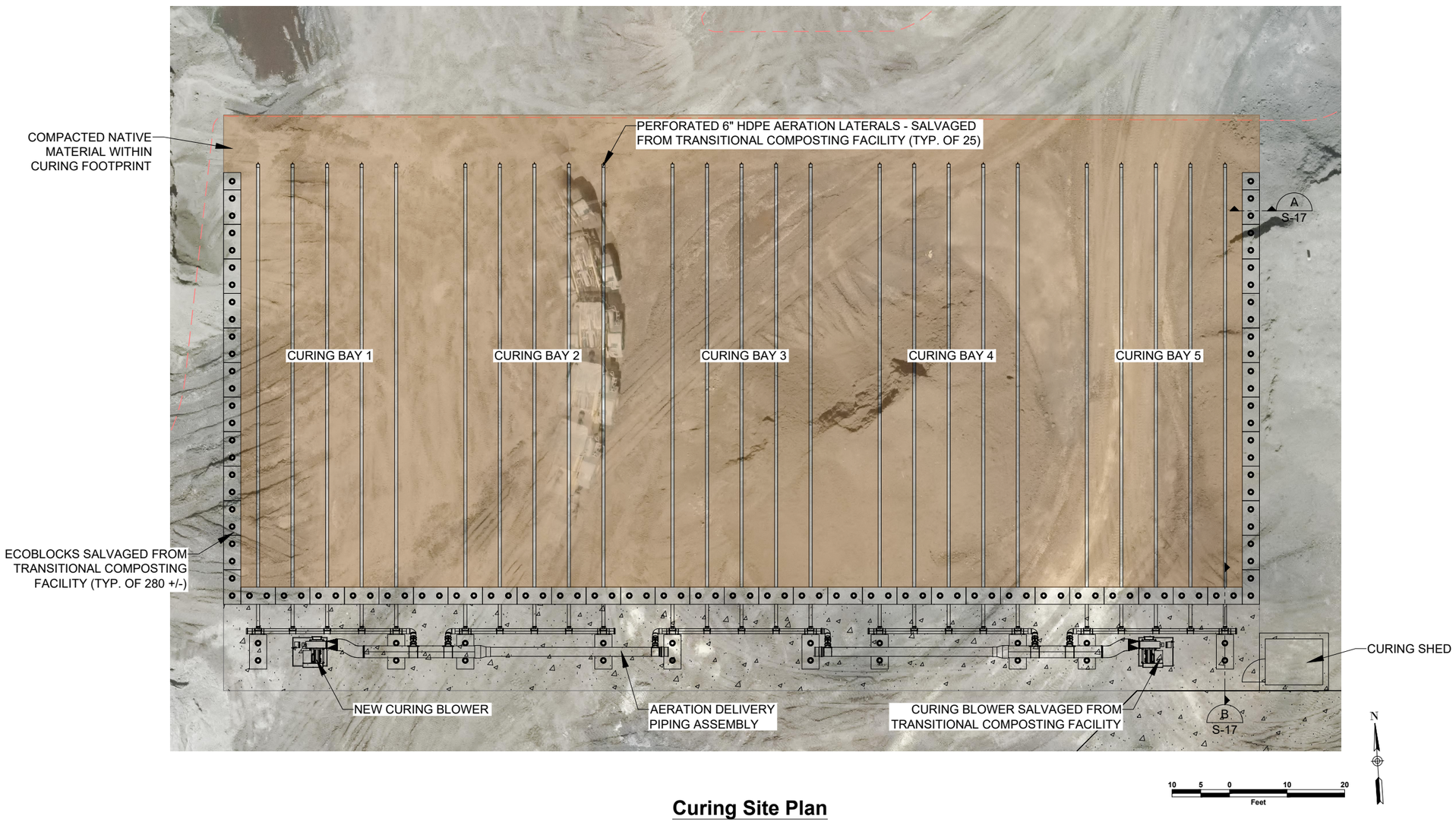

Curing Site Plan

Revision	Date	By
30% Draft	8/1/24	AE
60% Draft	11/18/24	AE
90% Draft	1/31/25	AE
Final	2/14/25	AE

Revision: Final

Plot Scale: 1:2

Drawn By: A.Eckhart, P.E.

Approved By: P.Montgomery, P.E.

Checked By: A.Eckhart, P.E.

Designed By: P.Montgomery, P.E.

Engineer

Anderson~Montgomery
CONSULTING ENGINEERS
1064 N. Warren
Helena, MT 59601
Phone (406) 449-3303

Owner: City Of Missoula

Project Title: Garden City Compost Facility Improvements

Sheet Title: **Curing Site Plan**

Sheet: **C-6**

X:\MISSOULA COMPOST\DESIGN\DRAWINGS\Sheets\4 - Civil\C-6 Curing Site Plan.dwg SAVED: 2/7/25 PRINTED: 2/11/25 BY: ADAM

Compost Bays and Biofilters Site Plan

Revision	Date	By
30% Draft	8/1/24	AE
60% Draft	11/18/24	AE
90% Draft	1/31/25	AE
Final	2/14/25	AE

Revision: Final
Plot Scale: 1:2
Drawn By: A.Eckhart, P.E.
Approved By: P.Montgomery, P.E.
Checked By: A.Eckhart, P.E.
Designed By: P.Montgomery, P.E.

Engineer:
Anderson~Montgomery
CONSULTING ENGINEERS
1064 N. Warren
Helena, MT 59601
Phone (406) 449-3303

Owner: City Of Missoula

Project Title: Garden City Compost Facility Improvements

Sheet Title: **Compost Bays and Biofilters Site Plan**

Sheet: **C-7**

X:\MISSOULA COMPOST\DESIGN\DRAWINGS\Sheets\4 - Civil\C-7 Compost Bays & Biofilters Site Plan.dwg SAVED: 2/3/25 PRINTED: 2/11/25 BY: ADAM

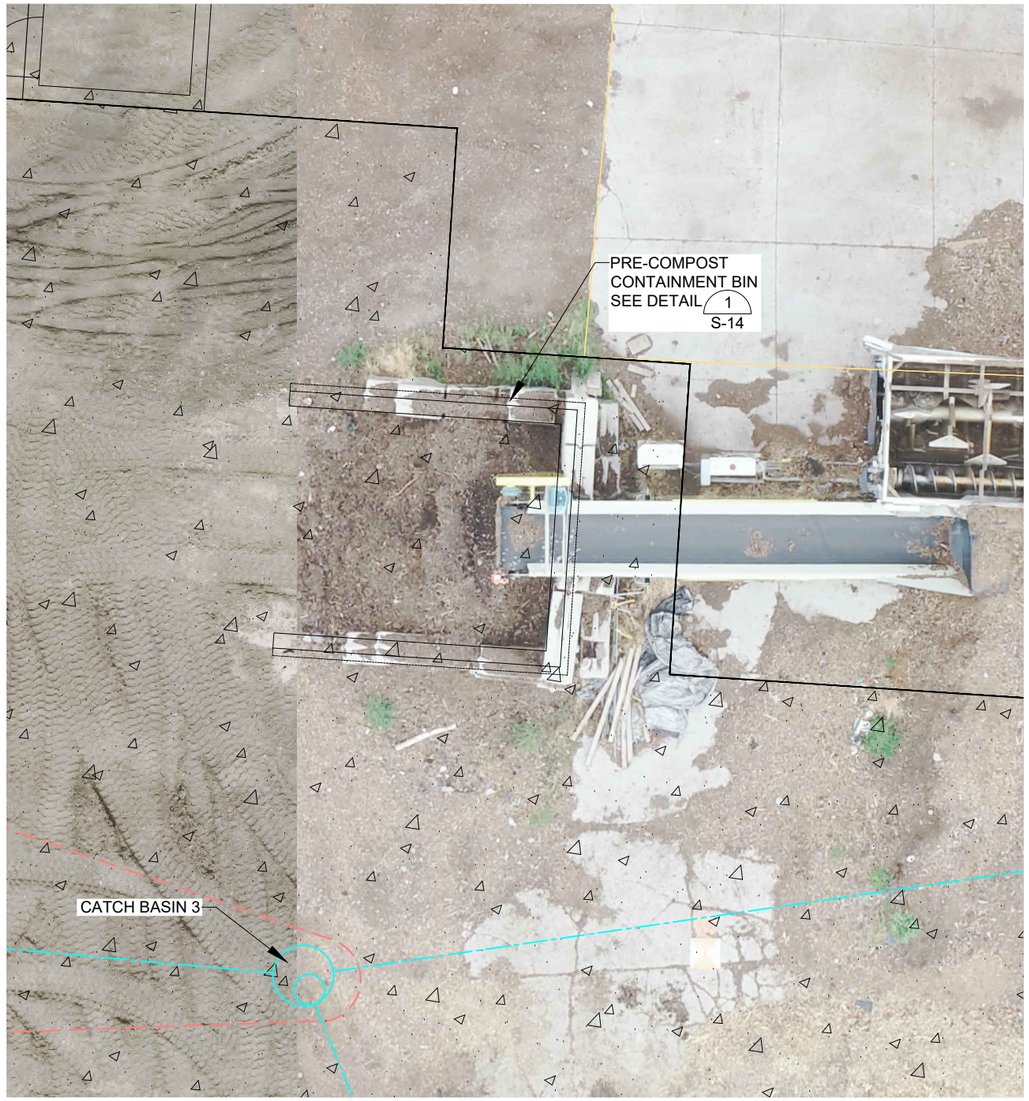

Pre-Compost Containment Bin Site Plan

5 2.5 0 5 10
Feet

N

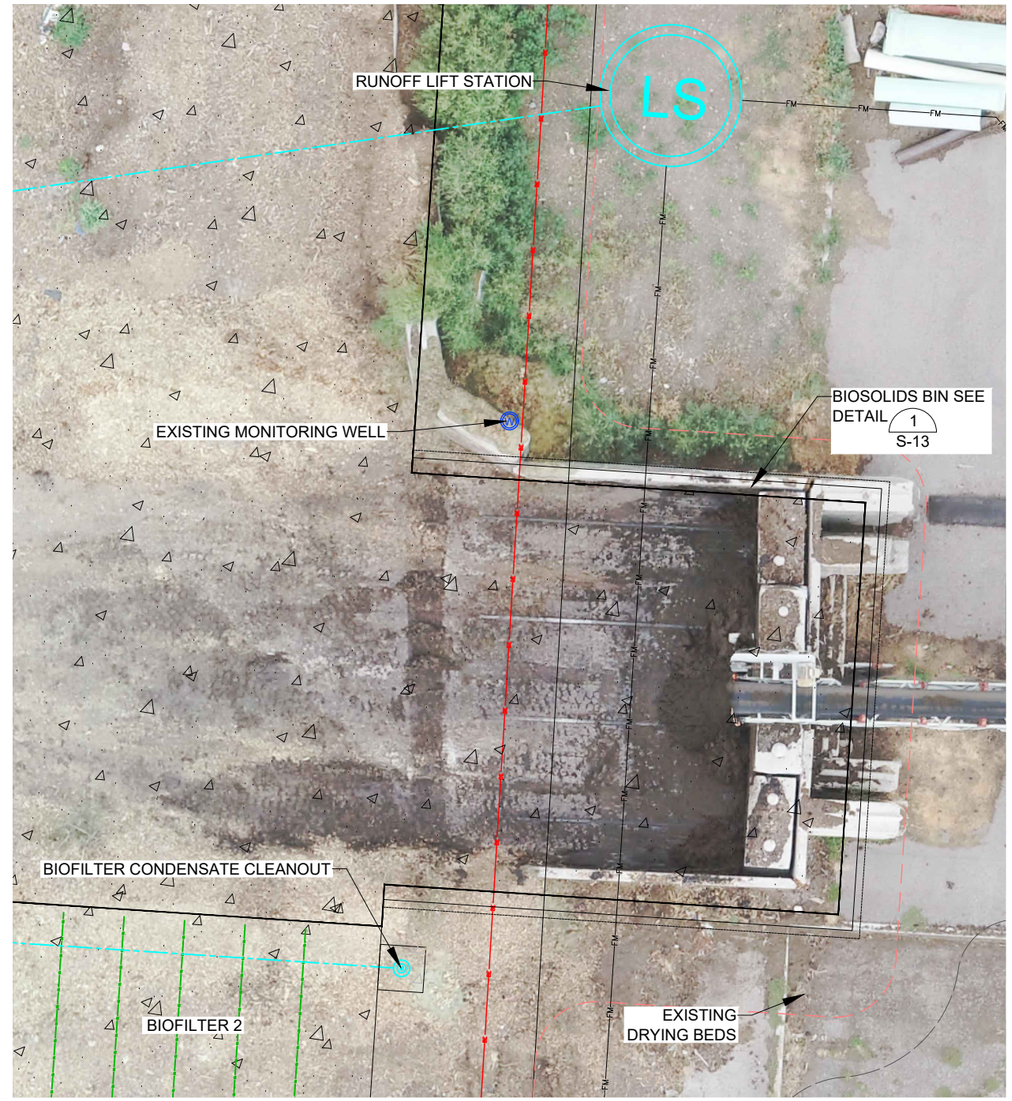

Biosolids Bin Site Plan

5 2.5 0 5 10
Feet

N

Revision	Date	By
30% Draft	8/1/24	AE
60% Draft	11/18/24	AE
90% Draft	1/31/25	AE
Final	2/14/25	AE

Revision
Final

Plot Scale
1:2

Drawn By
A.Eckhart, P.E.

Approved By
P.Montgomery, P.E.

Checked By
A.Eckhart, P.E.

Designed By
P.Montgomery, P.E.

Engineer

Anderson~Montgomery
CONSULTING ENGINEERS
1064 N. Warren
Helena, MT 59601
Phone (406) 449-3303

Owner
City Of Missoula

Project Title
Garden City Compost Facility Improvements

Sheet Title
Pre-Compost Containment Bin and Biosolids Bin Site Plan

Sheet
C-8

X:\MISSOULA COMPOST\DESIGN\DRAWINGS\Sheets\4 - Civil\C-8 Pre-Compost Containment Bin & Biosolids Bin Site Plan.dwg SAVED: 2/7/25 PRINTED: 2/11/25 BY: ADAM

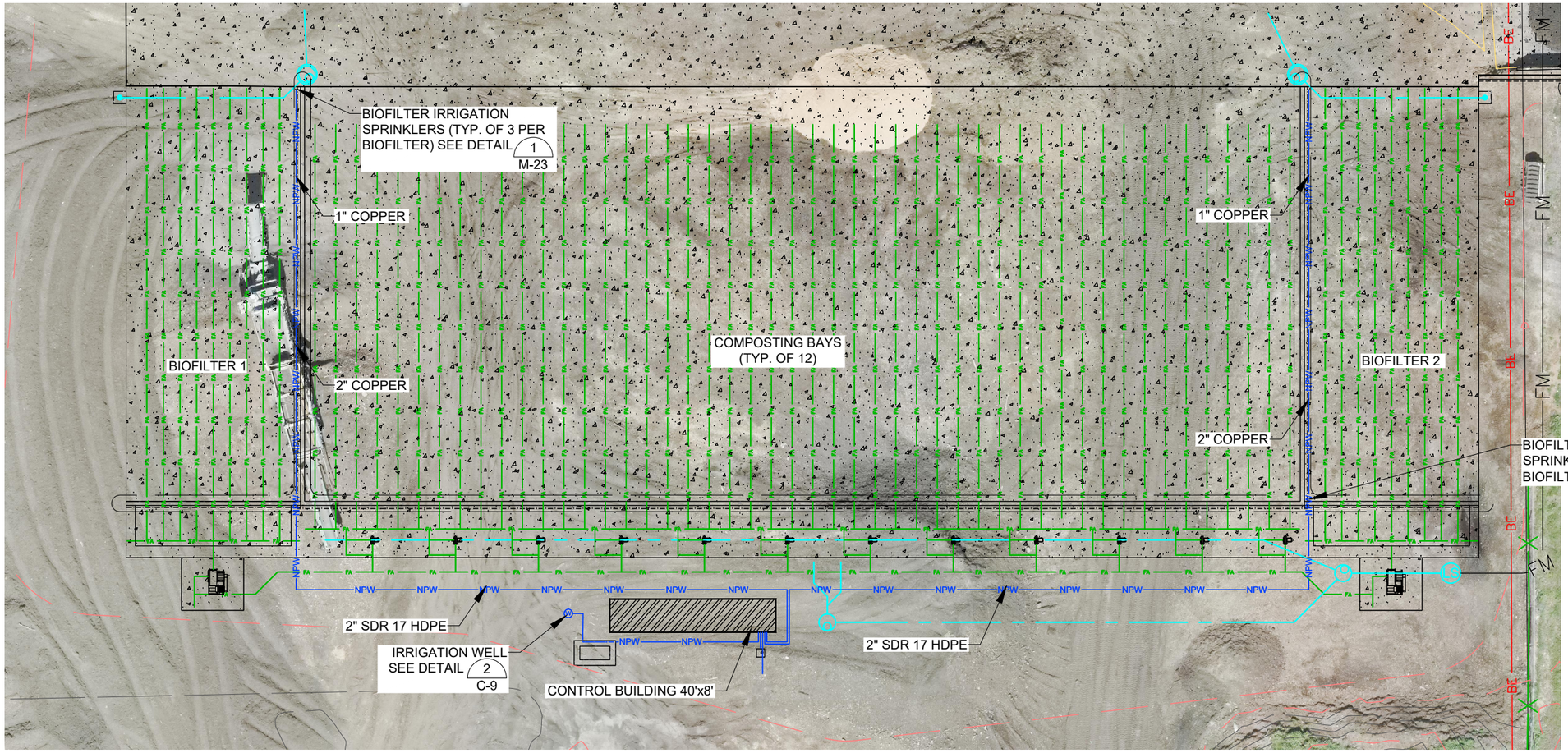

Irrigation Well Site Plan (1 / C-4)

NOTES:

- ALL IRRIGATION PIPING SHALL HAVE A MINIMUM OF 18" OF COVER.
- IRRIGATION PIPING SHALL BE INSTALLED WITH FITTINGS AS SHOWN ON DRAWING OR INSTALLED WITH BENDS NOT EXCEEDING THE BEND RADIUS OF THE PIPE PER THE MANUFACTURER'S RECOMMENDATIONS.
- IRRIGATION SYSTEM MANIFOLD SHALL BE MOUNTED INSIDE THE CONTROL BUILDING ADJACENT TO THE PRESSURE SYSTEM. THE SYSTEM SHALL CONTAIN A KING COUPLER DOWNSTREAM OF THE PRESSURE SYSTEM TO ALLOW THE IRRIGATION SYSTEM TO BE BLOWN OUT, SEE DETAIL 1 CD-13

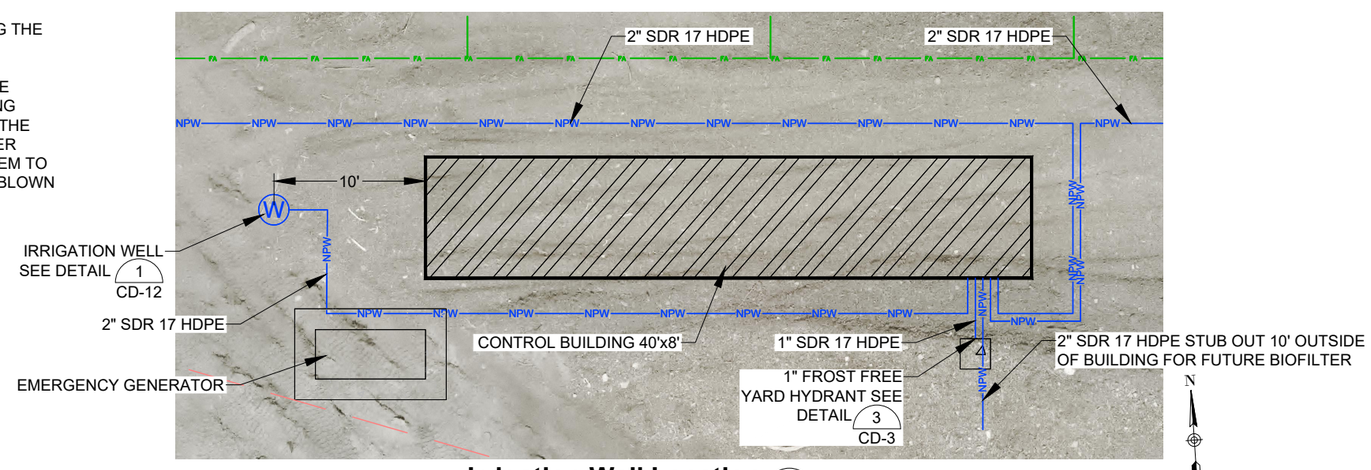

Irrigation Well Location (2 / C-9)

Revision	Date	By
30% Draft	8/1/24	AE
60% Draft	11/18/24	AE
90% Draft	1/31/25	AE
Final	2/14/25	AE

Revision: Final
Plot Scale: 1:2
Drawn By: A.Eckhart, P.E.
Approved By: P.Montgomery, P.E.
Checked By: A.Eckhart, P.E.
Designed By: P.Montgomery, P.E.

Engineer:
Anderson~Montgomery CONSULTING ENGINEERS
1064 N. Warren
Helena, MT 59601
Phone (406) 449-3303

Owner: City Of Missoula

Project Title: Garden City Compost Facility Improvements

Sheet Title: **Irrigation Well Site Plan**

Sheet: **C-9**

X:\MISSOULA COMPOST\DESIGN\DRAWINGS\Sheets\4 – Civil\C-9 Irrigation Well Plan.dwg SAVED: 2/7/25 PRINTED: 2/11/25 BY: ADAM

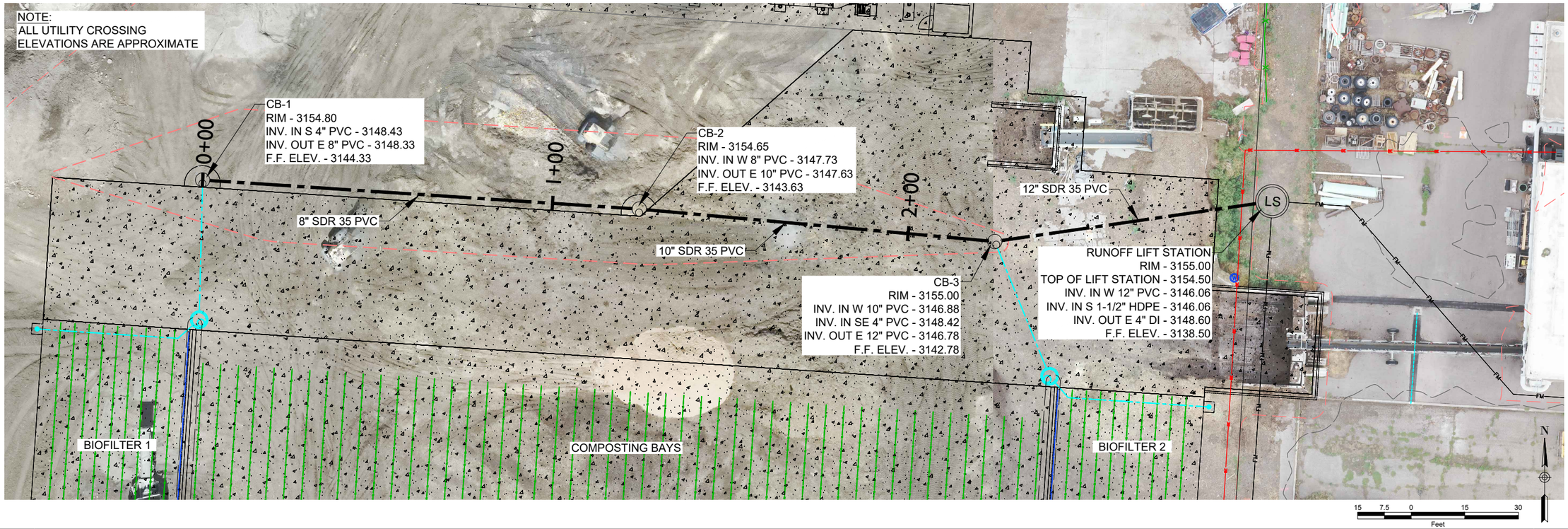

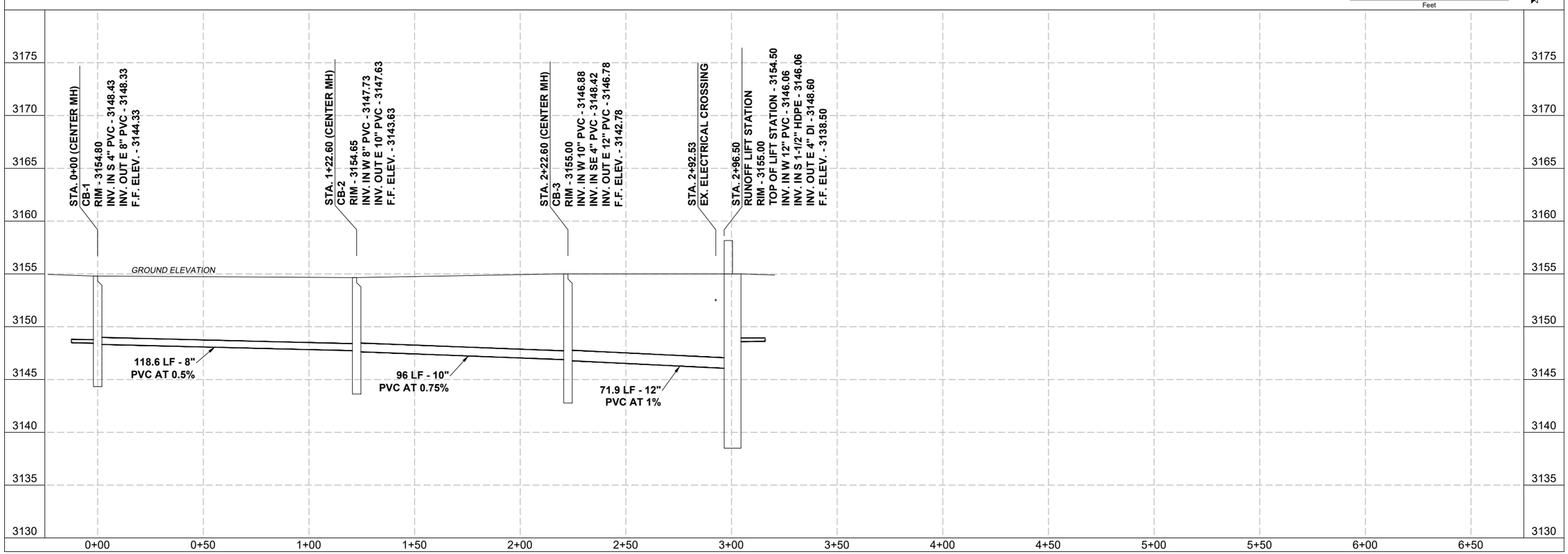

Revision	Date	By
30% Draft	8/1/24	AE
60% Draft	11/18/24	AE
90% Draft	1/31/25	AE
Final	2/14/25	AE

Revision: Final
Plot Scale: 1:2
Drawn By: A.Eckhart, P.E.
Approved By: P.Montgomery, P.E.
Checked By: A.Eckhart, P.E.
Designed By: P.Montgomery, P.E.

Engineer
Anderson~Montgomery
CONSULTING ENGINEERS
1064 N. Warren
Helena, MT 59601
Phone (406) 449-3303

Owner
City Of Missoula

Project Title
Garden City Compost Facility Improvements

Sheet Title
CB-1 to Lift Station Plan & Profile

Sheet
C-10

X:\MISSOULA COMPOST\DESIGN\DRAWINGS\Sheets\MISSOULA Border.dwg SAVED: 2/3/25 PRINTED: 5/8/19 BY: ADAM

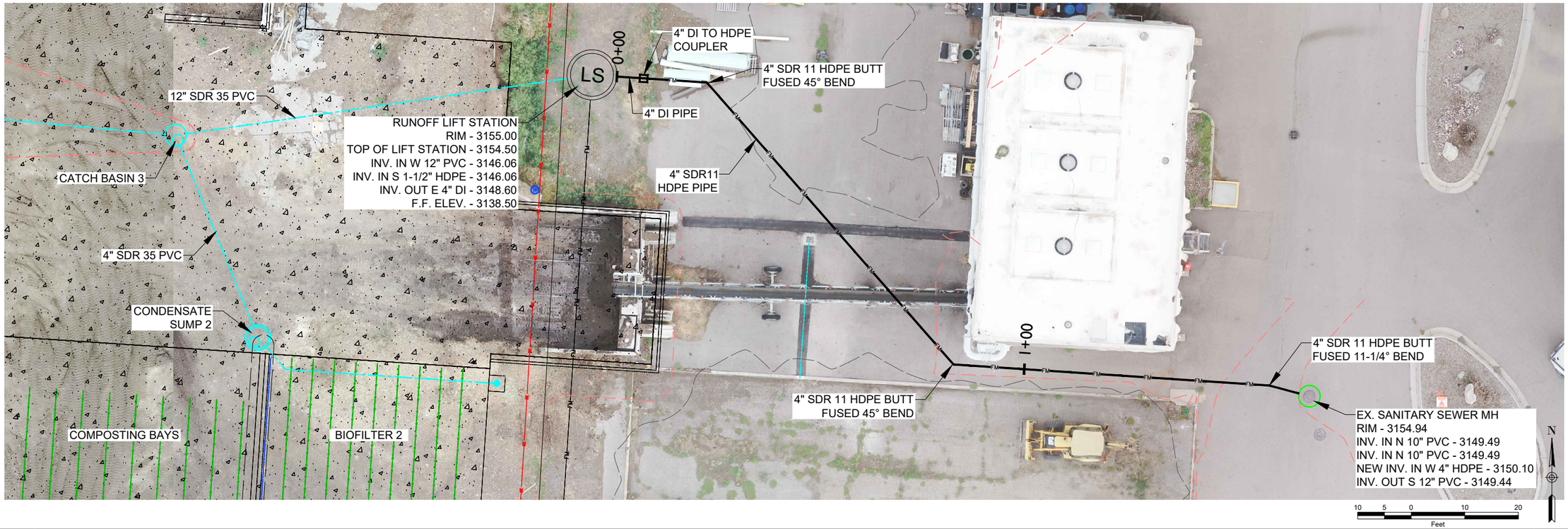

NOTE:
INSULATE FORCEMAIN WHERE A MINIMUM 6' OF BURY CANNOT BE OBTAINED OBSERVING EXISTING TOPOGRAPHY, SEE DETAIL 3/CD-2

Revision	Date	By
30% Draft	8/1/24	AE
60% Draft	11/18/24	AE
90% Draft	1/31/25	AE
Final	2/14/25	AE

Revision: Final
Plot Scale: 1:2
Drawn By: A.Eckhart, P.E.
Approved By: P.Montgomery, P.E.
Checked By: A.Eckhart, P.E.
Designed By: P.Montgomery, P.E.

Engineer
Anderson~Montgomery CONSULTING ENGINEERS
1064 N. Warren
Helena, MT 59601
Phone (406) 449-3303

Owner
City Of Missoula

Project Title
Garden City Compost Facility Improvements

Sheet Title
Lift Station to S.S. MH Plan & Profile

Sheet
C-11

X:\MISSOULA COMPOST\DESIGN\DRAWINGS\Sheets\MISSOULA Border.dwg SAVED: 2/3/25 PRINTED: 5/8/19 BY: ADAM

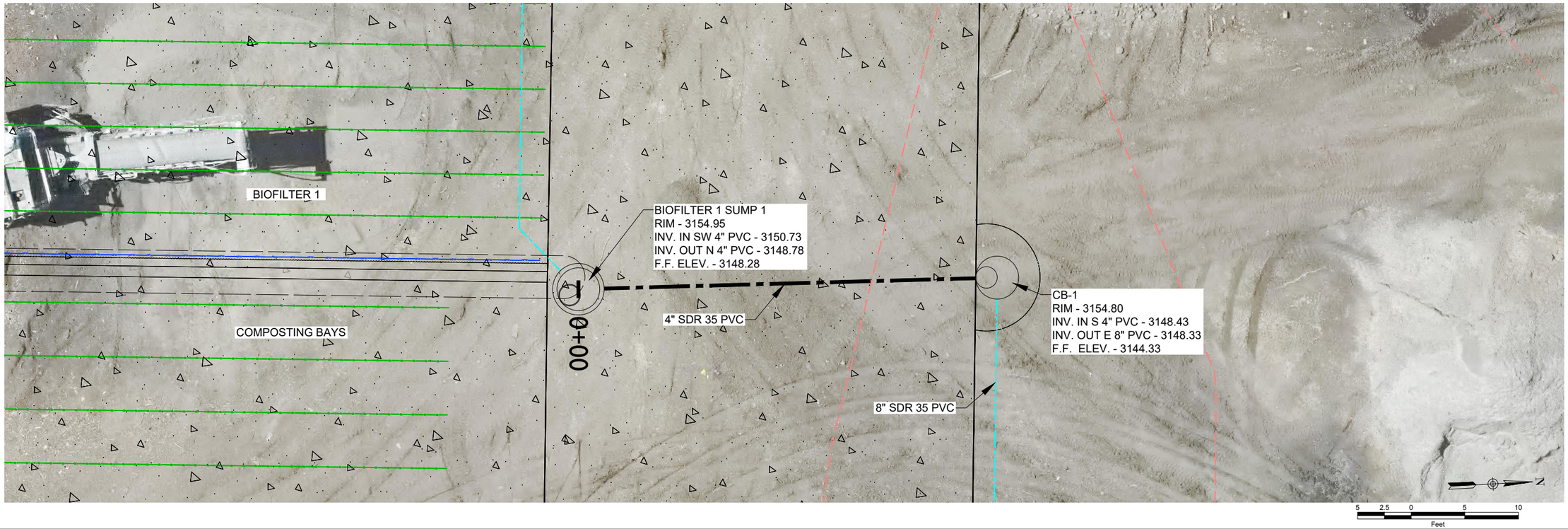

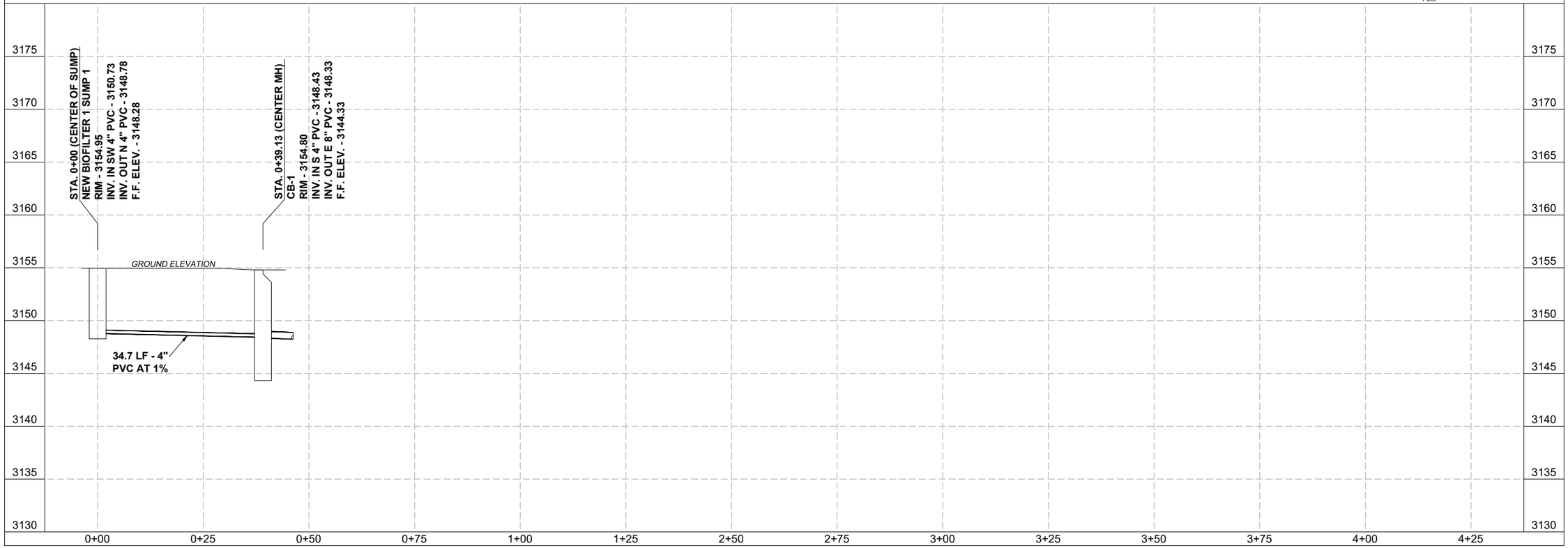

Revision	Date	By
30% Draft	8/1/24	AE
60% Draft	11/18/24	AE
90% Draft	1/31/25	AE
Final	2/14/25	AE

Revision
Final

Plot Scale
1:2

Drawn By
A.Eckhart, P.E.

Approved By
P.Montgomery, P.E.

Checked By
A.Eckhart, P.E.

Designed By
P.Montgomery, P.E.

Engineer

Anderson~Montgomery
CONSULTING ENGINEERS
1064 N. Warren
Helena, MT 59601
Phone (406) 449-3303

Owner
City Of Missoula

Project Title
Garden City Compost Facility Improvements

Sheet Title
Biofilter Sump 1 to CB-1 Plan & Profile

Sheet
C-12

X:\MISSOULA COMPOST\DESIGN\DRAWINGS\Sheets\MISSOULA Border.dwg SAVED: 2/3/25 PRINTED: 5/8/19 BY: ADAM

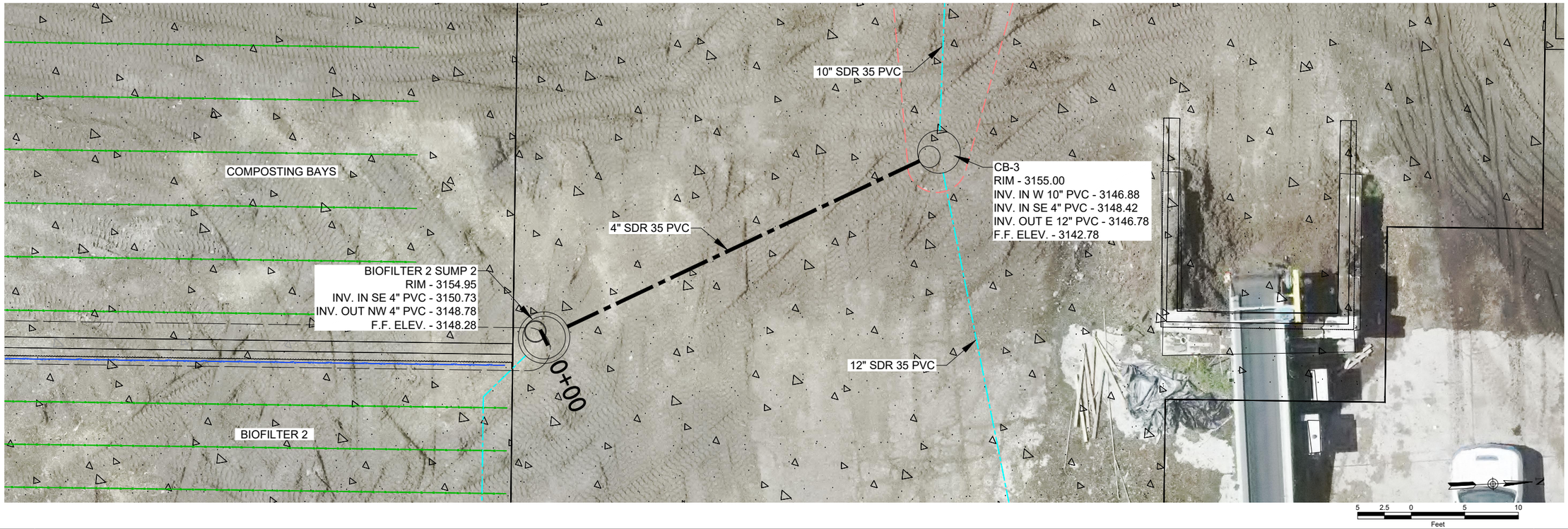

Revision	Date	By
30% Draft	8/1/24	AE
60% Draft	11/18/24	AE
90% Draft	1/31/25	AE
Final	2/14/25	AE

Revision: Final
Plot Scale: 1:2
Drawn By: A.Eckhart, P.E.
Approved By: P.Montgomery, P.E.
Checked By: A.Eckhart, P.E.
Designed By: P.Montgomery, P.E.

Engineer

Anderson~Montgomery
CONSULTING ENGINEERS
1064 N. Warren
Helena, MT 59601
Phone (406) 449-3303

Owner: City Of Missoula

Project Title: Garden City Compost Facility Improvements

Sheet Title: **Biofilter Sump 2 to CB-3 Plan & Profile**

Sheet: **C-13**

X:\MISSOULA COMPOST\DESIGN\DRAWINGS\Sheets\MISSOULA Border.dwg SAVED: 2/3/25 PRINTED: 5/8/19 BY: ADAM

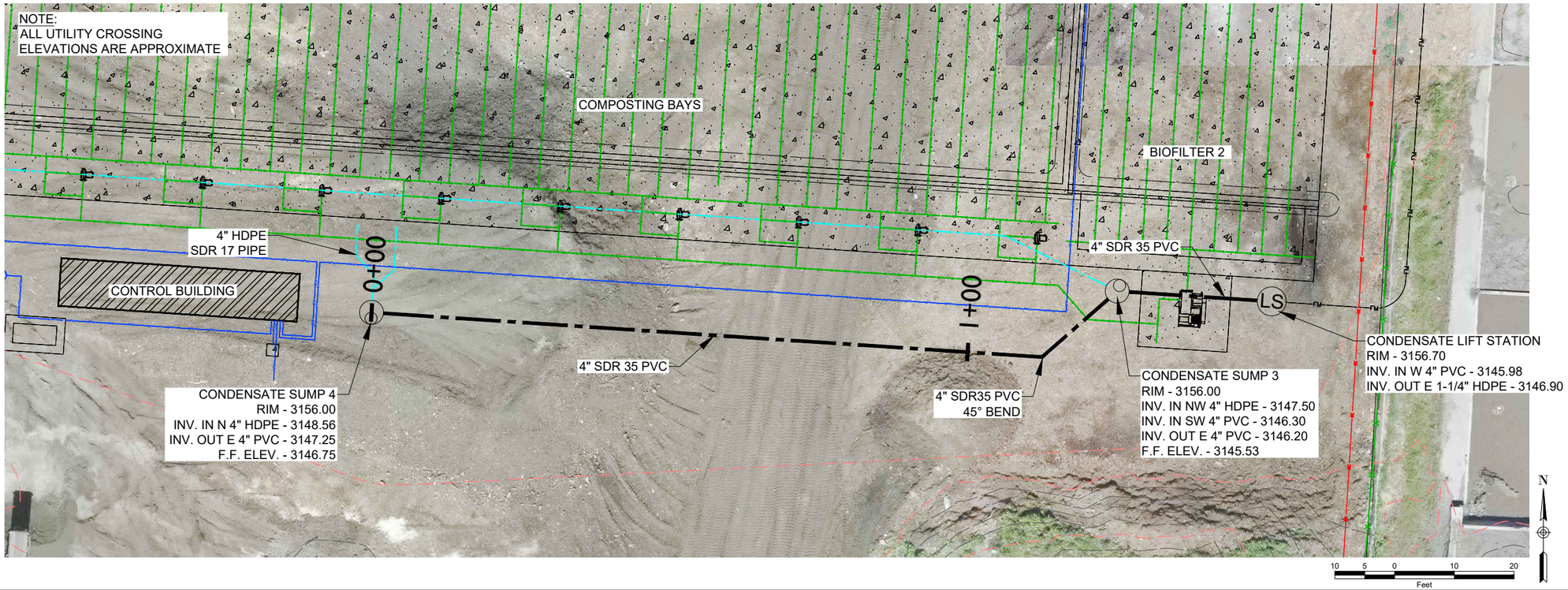

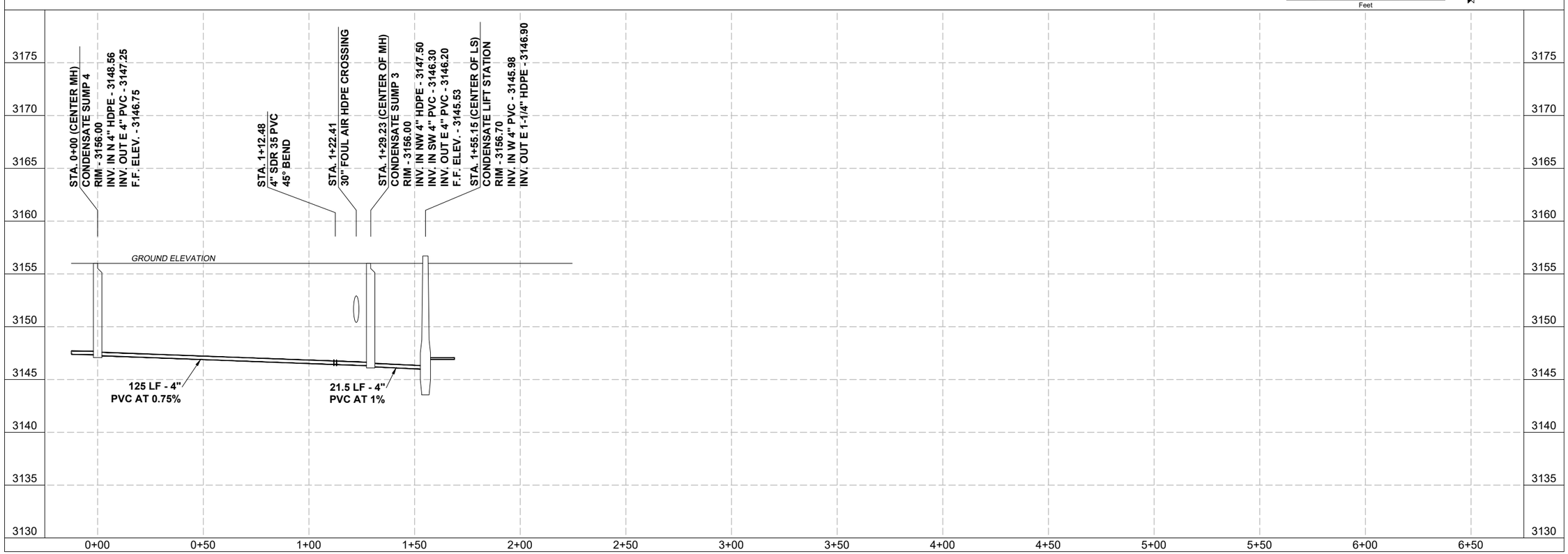

Revision	Date	By
30% Draft	8/1/24	AE
60% Draft	11/18/24	AE
90% Draft	1/31/25	AE
Final	2/14/25	AE

Revision
Final

Plot Scale
1:2

Drawn By
A.Eckhart, P.E.

Approved By
P.Montgomery, P.E.

Checked By
A.Eckhart, P.E.

Designed By
P.Montgomery, P.E.

Engineer

Anderson~Montgomery
CONSULTING ENGINEERS
1064 N. Warren
Helena, MT 59601
Phone (406) 449-3303

Owner
City Of Missoula

Project Title
Garden City Compost Facility Improvements

Sheet Title
Sump 4 to E-One Lift Station Plan & Profile

Sheet
C-14

X:\MISSOULA COMPOST\DESIGN\DRAWINGS\Sheets\MISSOULA Border.dwg SAVED: 2/3/25 PRINTED: 5/8/19 BY: ADAM

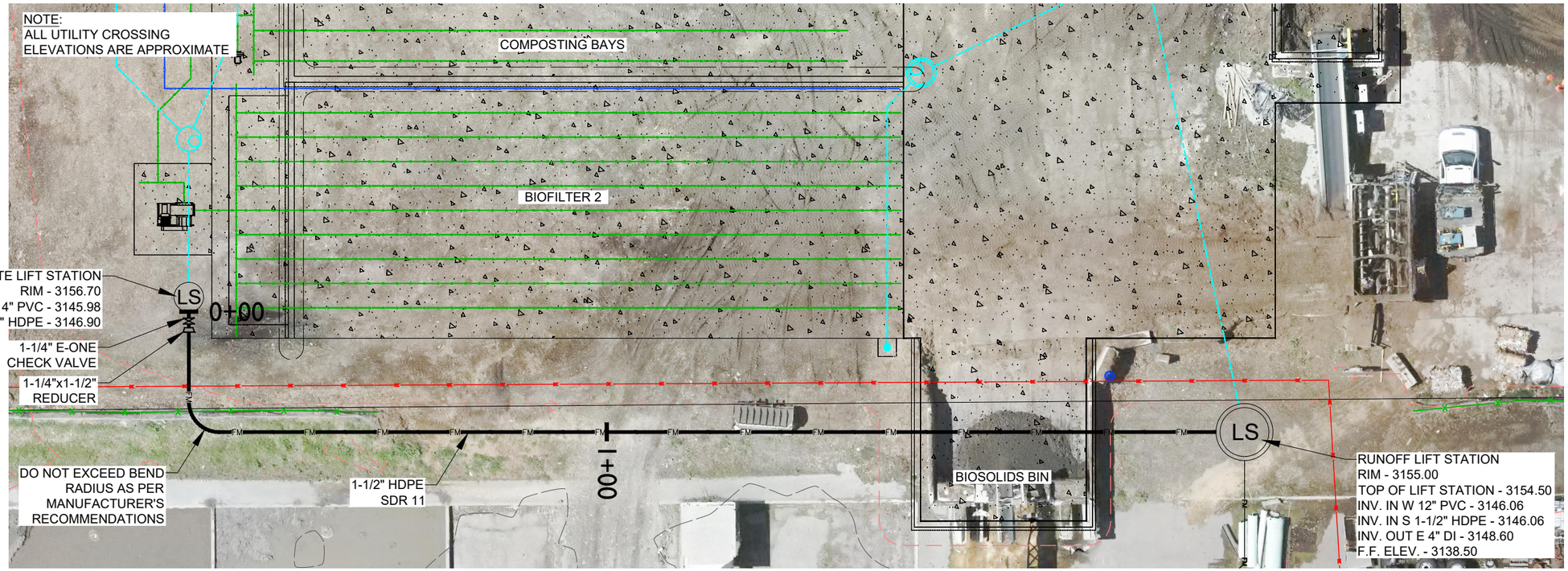

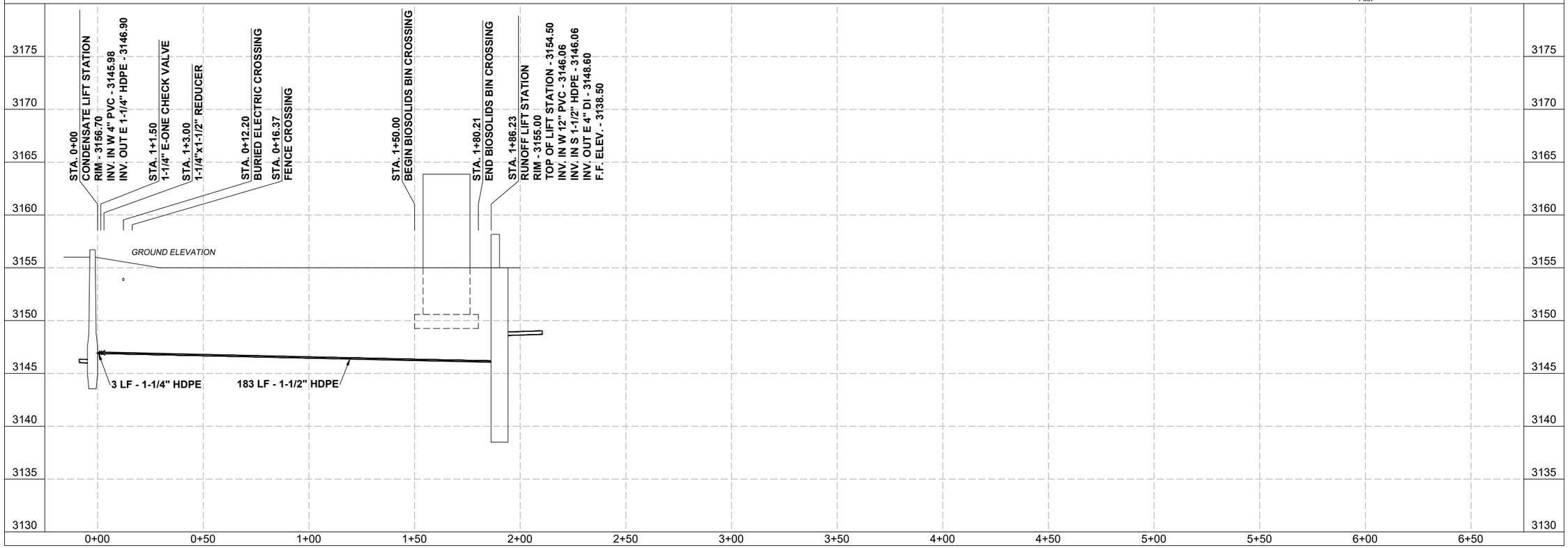

Revision	Date	By
30% Draft	8/1/24	AE
60% Draft	11/18/24	AE
90% Draft	1/31/25	AE
Final	2/14/25	AE

Revision: Final
Plot Scale: 1:2
Drawn By: A.Eckhart, P.E.
Approved By: P.Montgomery, P.E.
Checked By: A.Eckhart, P.E.
Designed By: P.Montgomery, P.E.

Engineer

Anderson~Montgomery
CONSULTING ENGINEERS
1064 N. Warren
Helena, MT 59601
Phone (406) 449-3303

Owner: City Of Missoula

Project Title: Garden City Compost Facility Improvements

Sheet Title: **E-One Lift Station to Lift Station Plan & Profile**

Sheet: **C-15**

X:\MISSOULA COMPOST\DESIGN\DRAWINGS\Sheets\MISSOULA Border.dwg SAVED: 2/3/25 PRINTED: 5/8/19 BY: ADAM

NOTES:
THE CONTRACTOR SHALL SECURE AUTHORIZATION TO DISCHARGE UNDER MDEQ'S GENERAL PERMIT FOR STORM WATER DISCHARGES ASSOCIATED WITH CONSTRUCTION ACTIVITY MTR100000 AND PREPARE AN APPROVABLE STORM WATER POLLUTION PREVENTION PLAN (SWPPP). THE SWPPP SHALL IDENTIFY BEST MANAGEMENT PRACTICES (BMPs) TO ADDRESS POTENTIAL RUNOFF, EROSION AND SEDIMENT CONTROL ISSUES AT THE PROJECT SITE. SUGGESTED LOCATIONS AND TYPES OF BMP'S ARE SHOWN IN THE DRAWING, YET ARE NOT MEANT TO BE ALL-INCLUSIVE. CONTRACTOR SHALL BE SOLEYLY RESPONSIBLE FOR SELECTING THE MOST APPROPRIATE BMP, INSTALLATION, PROPER MAINTENANCE AND REMOVAL OF THE BMP UPON PROJECT COMPLETION.

EC - EROSION CONTROL BMP
——EC——

SC - SEDIMENT CONTROL BMP
——SC——

RoR - RUN ON/OFF BMP
——RoR——

OTr - OFFSITE TRACKING
——OTr——

EXAMPLE SEDIMENT CONTROL BMP

EXAMPLE EROSION CONTROL BMP

EXAMPLE RUN ON/OFF BMP

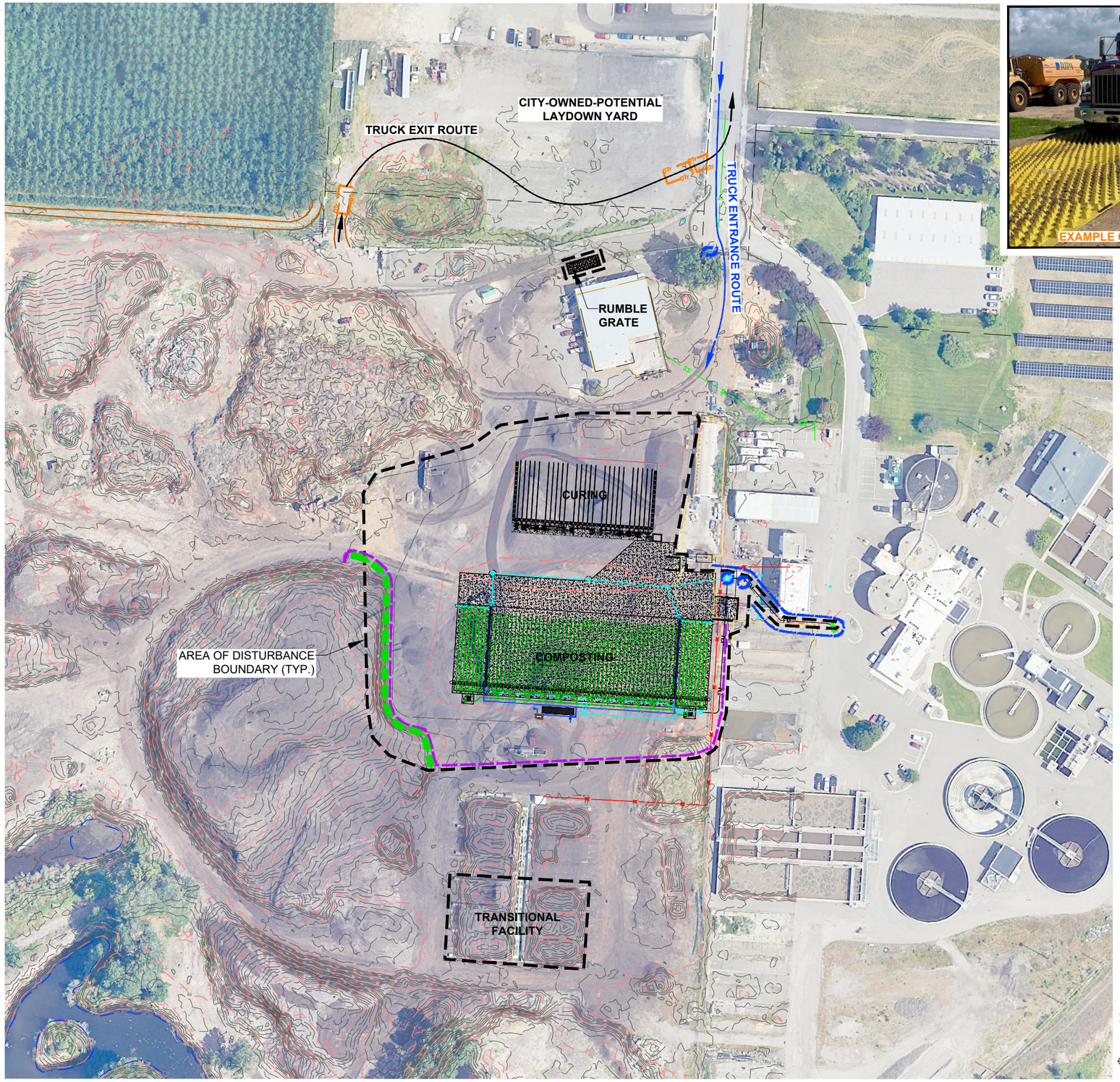

EXAMPLE OFFSITE TRACKING

Runoff, Erosion and Sediment Control Plan

Revision	Date	By
30% Draft	8/1/24	AE
60% Draft	11/18/24	AE
90% Draft	1/31/25	AE
Final	2/14/25	AE

Revision: Final
Plot Scale: 1:2
Drawn By: A.Eckhart, P.E.
Approved By: P.Montgomery, P.E.
Checked By: A.Eckhart, P.E.
Designed By: P.Montgomery, P.E.

Engineer
Anderson~Montgomery
CONSULTING ENGINEERS
1064 N. Warren
Helena, MT 59601
Phone (406) 449-3303

Owner: City Of Missoula

Project Title: Garden City Compost Facility Improvements

Sheet Title: **Runoff Control Plan**

Sheet: **C-16**

X:\MISSOULA COMPOST\DESIGN\DRAWINGS\Sheets\4 – Civil\C-16 Runoff Control Plan.dwg SAVED: 2/17/25 PRINTED: 2/17/25 BY: ADAM

NOTES:
1. KEEP CONCRETE CLEAR OF JOINT AND JOINT ACCESSORIES
2. POUR THRUST BLOCKING AGAINST 3/4" MINUS GRAVEL OR STRUCTURAL FILL. 3/4" MINUS GRAVEL OR STRUCTURAL FILL SHALL BE AGAINST UNDISTURBED EARTH.
3. REQUIRED VOLUMES AND BEARING AREAS SHALL BE AS SHOWN IN THE TABLE AND ADJUSTED, IF NECESSARY, TO CONFORM TO THE TEST PRESSURE(S) AND ALLOWABLE SOIL BEARING STRESS OF 2,000 LBS/SQFT.
4. THRUST BLOCK VOLUMES FOR VERTICAL BENDS HAVING UPWARD RESULTANT THRUSTS ARE BASED ON TEST PRESSURE OF 150 PSIG AND THE WEIGHT OF CONCRETE = 4,050 LBS PER CUBIC YARD. TO COMPUTE VOLUMES FOR DIFFERENT TEST PRESSURES USE THE FOLLOWING EQUATION:
   ACTUAL VOLUME = (TEST PRESSURE/150) X (TABLE VOLUME).
5. BEARING AREAS FOR HORIZONTAL BEND THRUST BLOCKS ARE BASED ON TEST PRESSURE OF 150 PSIG AND AN ALLOWABLE SOIL BEARING STRESS OF 2,000 LBS/SQFT. TO COMPUTE BEARING AREAS FOR DIFFERENT TEST PRESSURES US THE FOLLOWING EQUATION:
   $B_1 = B(13.33)(P_1 / 2000)$ WHERE:
   P_1 = ACTUAL TEST PRESSURE, PSIG
   B = COMPUTED BEARING AREA
   B = BEARING AREA FROM TABLE
6. VERTICAL BENDS HAVING DOWNWARD RESULTANT THRUSTS AND HORIZONTAL BENDS, HAVE THE SAME THRUST BLOCK REQUIREMENTS.
7. BEARING AREAS, VOLUMES, AND SPECIAL BLOCKING DETAILS SHOWN ELSEWHERE IN THESE PLANS TAKE PRECEDENCE OVER THIS STANDARD DETAIL.
8. THRUST BLOCK BEARING AREA SHALL NOT BE LESS THAN 1.0 SQFT.
9. TEST PRESSURES ARE INDICATED IN THE SPECIFICATIONS AND THE ALLOWABLE SOIL BEARING STRESS IS 2,000 LBS/SQFT.
10. THE USE OF RESTRAINED JOINT SYSTEMS WILL BE ACCEPTED AS AN ALTERNATIVE TO CONVENTIONAL CONCRETE THRUST BLOCKING.
11. CONTRACTOR SHALL PROVIDE THRUST BLOCKING FOR ALL BURIED FITTINGS AND VALVES.

VOLUME OF THRUST BLOCK IN CUBIC YARDS (VERTICAL BENDS)

FITTING SIZE (INCHES)	BEND ANGLE		
	45°	22-1/2°	11-1/4°
4	0.8	0.3	0.1
6	2.0	0.8	0.3
8	3.0	1.1	0.4
10	4.5	1.7	0.7
12	5.4	2.4	1.0
14	8.6	3.2	1.3
16	11.1	4.2	1.7
18	14.1	5.3	2.2
20	17.3	6.6	2.7
24	24.2	9.2	3.8

BEARING AREA OF THRUST BLOCKS IN SQFT. (HORIZONTAL BENDS)

FITTING SIZE (INCHES)	TEE, WYE, PLUG, OR CAP	90° BEND, PLUGGED CROSS	TEE, PLUGGED RUN		BEND ANGLE		
			A_1	A_2	45°	22-1/2°	11-1/4°
4	1.3	1.8	1.3	1.8	1.0	1.0	--
6	3.0	4.2	3.0	4.2	2.3	1.2	1.0
8	5.3	7.6	5.3	7.6	4.1	2.1	1.0
10	8.3	11.8	8.3	11.8	6.4	3.3	1.6
12	12.0	17.0	12.0	17.0	9.2	4.7	2.4
14	16.3	23.1	16.3	23.1	12.5	6.4	3.2
16	21.4	30.2	21.4	30.2	16.3	8.3	4.2
18	27.0	32.0	27.0	32.0	20.7	10.5	5.3
20	33.4	47.2	33.4	47.2	25.5	13.0	6.5
24	40.3	55.0	40.3	55.0	35.7	18.0	9.0

NOTE:
* EACH AREA (A/2) IS HAVE OF TABULATED TOTAL AREA
** RESTRAINED PLUG

VERTICAL BEND REBAR

FITTING SIZE	ROD SIZE	EMBEDMENT
12" AND LESS	#6	30"
14" - 16"	#8	36"
18" - 20"	#10	36"
24"	#11	42"

NOTE:
EPOXY COATED REBAR OVER FITTING AND EMBEDDED IN CONCRETE (SEE TABLE FOR SIZES)

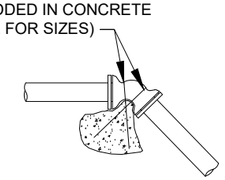

VALVE THRUST BLOCK DIMENSIONS

VALVE SIZE	REBAR SIZE	100 PSI			150 PSI		
		A	B	C	A	B	C
4"	#6	2.0'	2.0'	2.0'	2.0'	2.0'	2.0'
6"	#6	2.0'	2.0'	2.0'	2.0'	2.0'	2.0'
8"	#6	2.0'	2.0'	2.0'	2.0'	2.0'	2.0'
10"	#6	2.0'	2.0'	2.0'	2.5'	2.5'	2.0'
12"	#6	2.3'	2.0'	2.0'	3.0'	3.0'	2.7'
14"	#8	2.3'	2.0'	2.3'	3.4'	3.0'	3.0'
16"	#9	3.0'	3.0'	2.9'	4.3'	3.0'	3.0'
18"	#10	3.7'	3.0'	3.0'	5.4'	3.0'	3.0'
20"	#10	3.9'	3.3'	3.3'	5.7'	3.3'	3.3'
24"	#11	4.3'	4.0'	4.0'	6.4'	4.0'	4.0'

NOTE:
DIMENSION 'A' IS WIDTH OF THRUST BLOCK (PERPENDICULAR TO PAGE)

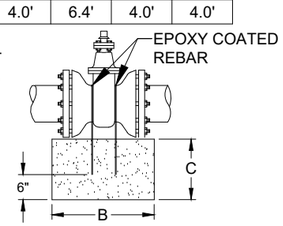

Thrust Block 1
NO SCALE ~

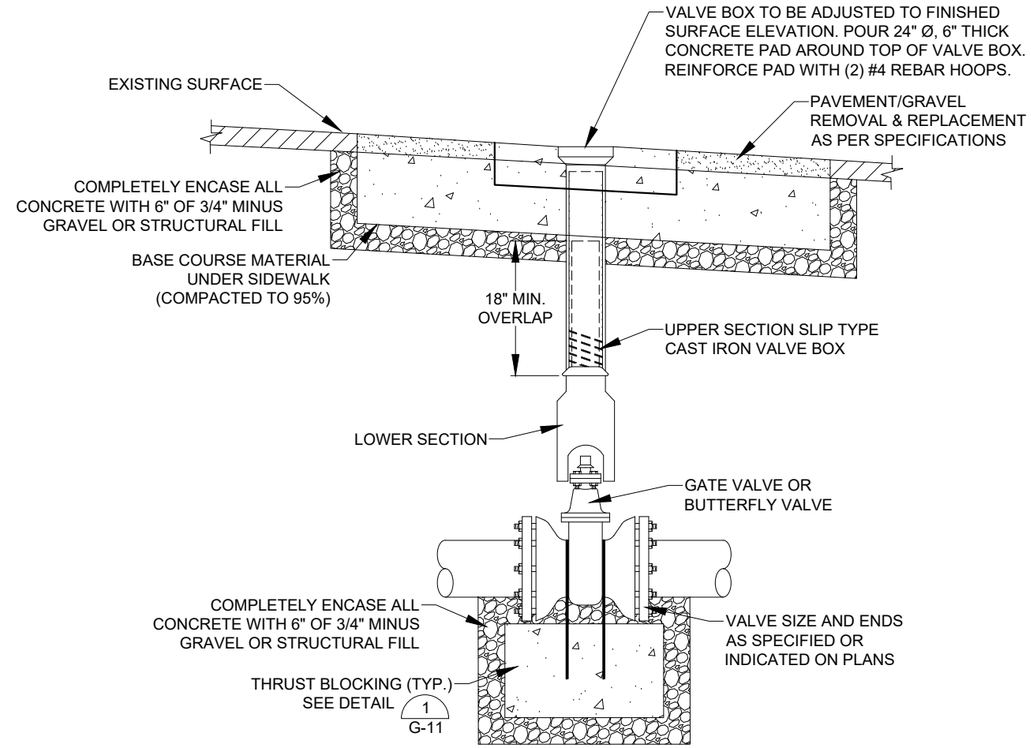

NOTE:
1. ALL VALVES AND FITTINGS SHALL BE POLYWRAPPED AND SEALED WITH 3M POLYTAPE OR APPROVED EQUAL.
2. NO PAYMENT SHALL BE MADE FOR ADJUSTMENT OF VALVE BOXES TO FINAL GRADE.
3. COMPACT ALL BACKFILL AROUND THE VALVE BOX UPPER SECTION BY MEANS OF HAND TAMPING.
4. CONTRACTOR SHALL PROVIDE OWNER WITH 1 VALVE WRENCH.
5. ALL CONCRETE AND CONCRETE THRUST BLOCKING SHALL BE ENCASED IN 3/4" MINUS GRAVEL OR STRUCTURAL FILL.

Valve Setting 2
NO SCALE ~

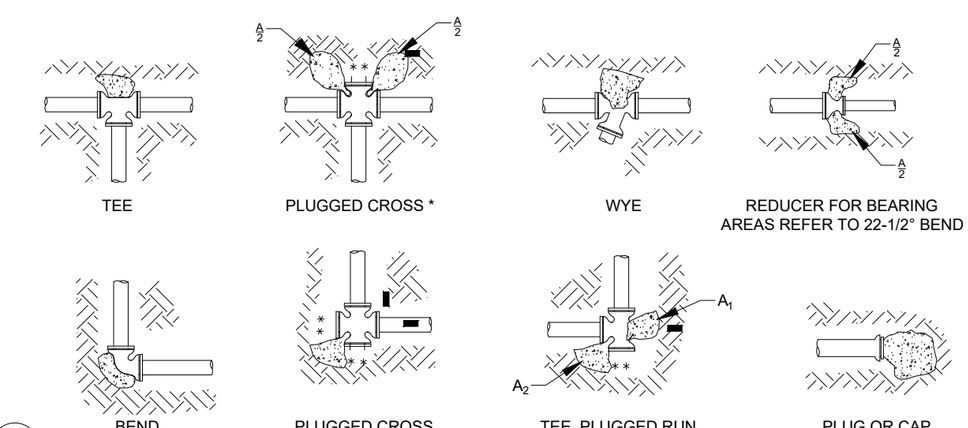

Revision	Date	By
30% Draft	8/1/24	AE
60% Draft	11/18/24	AE
90% Draft	1/31/25	AE
Final	2/14/25	AE

Revision: Final
Plot Scale: 1:2
Drawn By: A.Eckhart, P.E.
Approved By: P.Montgomery, P.E.
Checked By: A.Eckhart, P.E.
Designed By: P.Montgomery, P.E.

Engineer: Anderson~Montgomery CONSULTING ENGINEERS
1064 N. Warren
Helena, MT 59601
Phone (406) 449-3303

Owner: City Of Missoula

Project Title: Garden City Compost Facility Improvements

Sheet Title: **Civil Details**

Sheet: **CD-1**

X:\MISSOULA COMPOST\DESIGN\DRAWINGS\Sheets\5 – Civil Details\CD-1 Civil Details.dwg SAVED: 2/7/25 PRINTED: 2/11/25 BY: ADAM

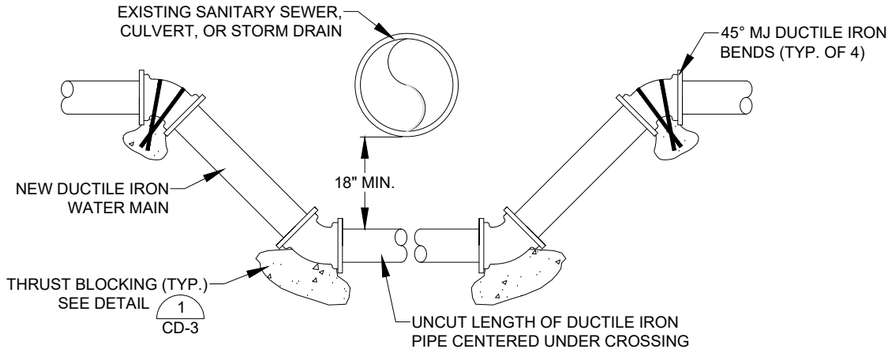

NOTE:
DURING CROSSINGS, STRUCTURAL SUPPORT OF THE SEWER OR STORM DRAIN SHALL BE PROVIDED BY THE CONTRACTOR. THE CONTRACTOR SHALL BE RESPONSIBLE FOR PREVENTING DAMAGE TO ANY EXISTING PIPES. IF AN EXISTING PIPE IS DAMAGED DUE TO CONTRACTOR NEGLIGENCE, THE PIPE SHALL BE REPAIRED AT NO ADDITIONAL COST TO THE OWNER.

Vertical Pipe Adjustment (1)
NO SCALE

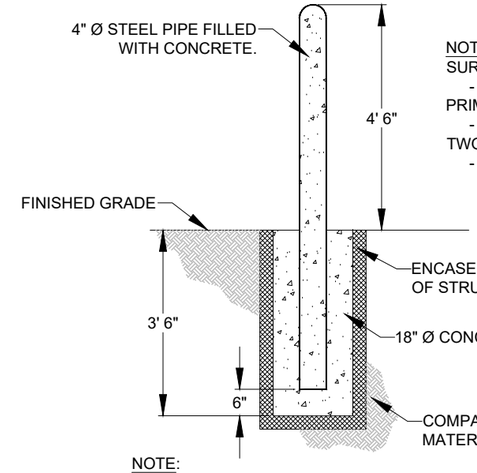

NOTE:
SURFACE PREPARATION:
- BLAST NEAR-WHITE
PRIME COAT:
- CARBOLINE CARBOCOAT 150-3.0 MIL DFT.
TWO FINISH COATS:
- CARBOLINE CARBOCOAT 30 OSHA YELLOW - 3.0 MIL DFT TOTAL

NOTE:
- BUILDING FACE, CONCRETE PADS, OR OTHER DRIVING HAZARDS SHALL BE A MINIMUM OF 12" FROM THE CENTERLINE OF PIPE BOLLARD.
- BOLLARDS LOCATED INSIDE BUILDINGS SHALL BE REMOVABLE.

Typical Pipe Bollard Detail (2)
NO SCALE

NOTES:
1. WHERE TRENCH PASSES THROUGH UNIMPROVED SURFACES: THE TOPSOIL SHALL BE REMOVED AND REPLACED A MINIMUM OF 12" FROM THE EDGE OF THE TRENCH OPENING.
2. WHERE TRENCH PASSES THROUGH EXISTING GRAVEL: THE GRAVEL SHALL BE REMOVED AND REPLACED A MINIMUM OF 12" FROM THE EDGE OF THE TRENCH OPENING.
3. WHERE TRENCH PASSES THROUGH EXISTING PAVEMENT: THE PAVEMENT SHALL BE CUT ALONG A NEAT VERTICAL LINE A MINIMUM OF 12" FROM THE EDGE OF THE TRENCH OPENING, JUST PRIOR TO PAVING.
4. WHERE TRENCH PASSES THROUGH EXISTING PAVEMENT: SAWCUT THE ASPHALT ALONG A NEAT VERTICAL LINE PER LIMITS SHOWN ON THE PLANS, JUST PRIOR TO PAVING. WHERE IMPORTED TRENCH BACKFILL IS NOT USED, SEPARATION/STABILIZATION FABRIC, PROPEX GEOTEX 801 NON-WOVEN GEOTEXTILE FABRIC OR APPROVED EQUAL WILL BE USED.
5. VERIFY THAT COMPACTION METHODS ARE COMPARABLE WITH PIPE MANUFACTURER'S RECOMMENDATIONS. ANY DAMAGE TO THE PIPE WILL BE THE CONTRACTOR'S RESPONSIBILITY.

NOTES CONTINUED:
6. TRENCH SHALL BE CONSTRUCTED TO OSHA SPECIFICATIONS FOR EXCAVATION. DRAWINGS DO NOT SHOW TRENCH DIMENSIONS OR BACK-SLOPES THAT MAY BE REQUIRED. CONTRACTOR REQUIRED TO DETERMINE WHICH OSHA SPECIFICATIONS ARE APPLICABLE.
7. ALL SPOILS SHALL BE REMOVED AND DISPOSED OF AT AN APPROVED LOCATION.
8. INSTALL 4" OF RIGID INSULATION THE FULL WIDTH OF THE TRENCH IN AREAS SHOWN ON PLANS.
9. ALL ROCKS GREATER THAN 12" IN ANY DIMENSION SHALL BE HAULED OFF SITE AND DISPOSED OF PROPERLY.
10. NO ROCKS OR LUMPS LARGER THAN 2" IN ANY DIMENSION SHALL BE ALLOWED WITHIN 6" OF THE PIPE.
11. USE SUITABLE NATIVE MATERIAL FOR BACKFILL. SEE TECHNICAL SPECIFICATIONS FOR CONDITIONS REQUIRING IMPORTED TRENCH BACKFILL.

NOTES CONTINUED:
12. USE LABELED AND COLOR-CODED TAPE FOR THE APPROPRIATE UTILITY PIPE, PLACED 18" MAXIMUM BELOW FINISHED SURFACE.
13. SEED, FERTILIZE, AND MULCH ALL DISTURBED AREAS WHICH ARE NOT PAVED, CONCRETED, SODDED, OR GRAVELED PER SPECIFICATIONS.
14. FOR WATER MAINS AND FORCE MAINS TRACER WIRE SHALL BE TAPED TO TOP OF ALL PLASTIC PIPE (PVC, POLYTHYLENE, AND HDPE) AND BROUGHT UP FIRE HYDRANTS AND VALVE PIPE CASINGS.
15. COMPACTION REFERS TO PERCENT OF MAXIMUM DENSITY DETERMINED BY A STANDARD PROCTOR. ASTM D698-91. TRENCHES EXCEEDING 10 FEET IN DEPTH SHALL BE COMPACTED TO 98% OF MAXIMUM DENSITY PER ASTM D698-91.
16. FINISHED GRADE MUST MATCH THE ORIGINAL EXISTING GRADE WHERE PIPE IS INSTALLED UNLESS OTHERWISE NOTED.
17. REFER TO GENERAL NOTES FOR ADDITIONAL REQUIREMENTS.

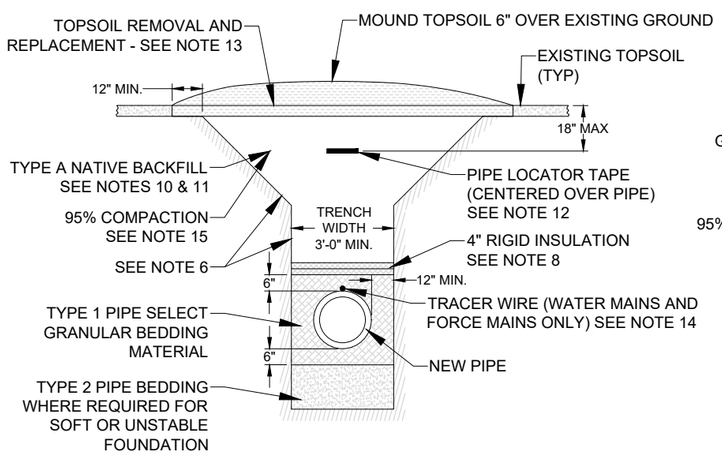

UNIMPROVED SURFACE

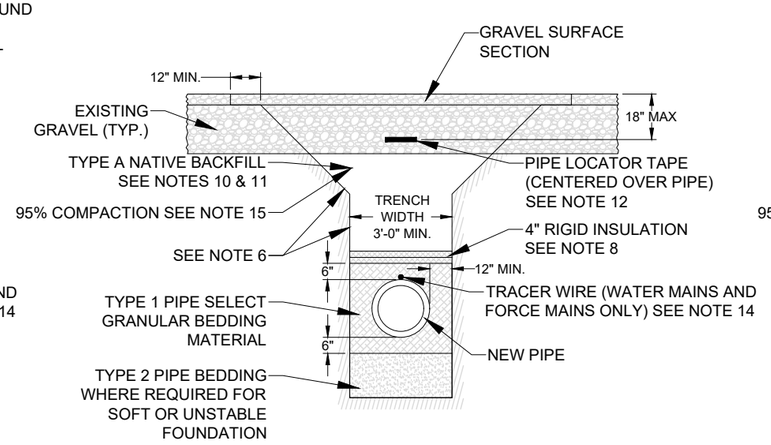

GRAVELED SURFACE

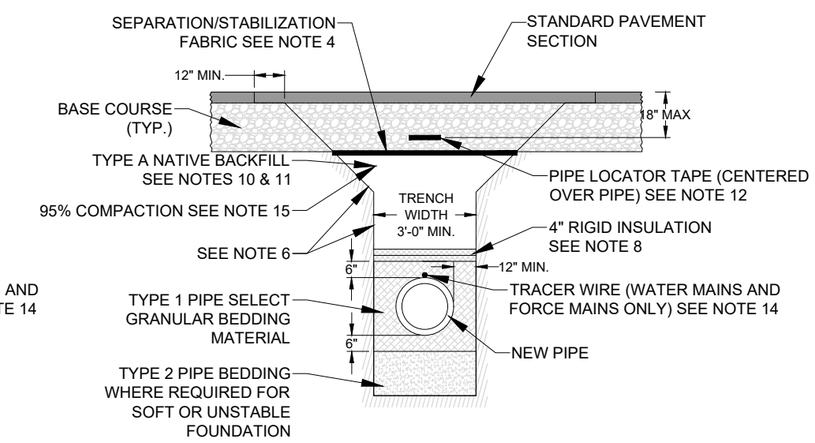

PAVED SURFACE

Pipe Bedding & Backfill Details (3)
NO SCALE

Revision	Date	By
30% Draft	8/1/24	AE
60% Draft	11/18/24	AE
90% Draft	1/31/25	AE
Final	2/14/25	AE

Revision: Final
Plot Scale: 1:2
Drawn By: A.Eckhart, P.E.
Approved By: P.Montgomery, P.E.
Checked By: A.Eckhart, P.E.
Designed By: P.Montgomery, P.E.

Engineer
Anderson~Montgomery CONSULTING ENGINEERS
1064 N. Warren
Helena, MT 59601
Phone (406) 449-3303

Owner: City Of Missoula

Project Title: Garden City Compost Facility Improvements

Sheet Title: **Civil Details**

Sheet: **CD-2**

X:\MISSOULA COMPOST\DESIGN\DRAWINGS\Sheets\5 - Civil Details\CD-2 Civil Details.dwg SAVED: 2/7/25 PRINTED: 2/11/25 BY: ADAM

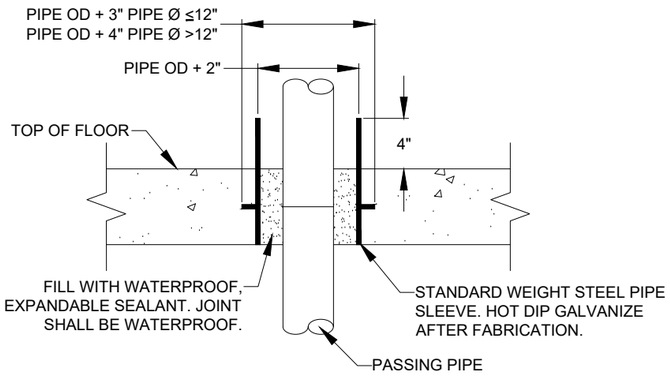

Typical Floor Sleeve Detail (1)

NO SCALE

NOTES:

- COAT FLOOR SLEEVE WITH SPECIFIED PAINT SYSTEM BEFORE CONCRETE PLACEMENT.
- PROVIDE WATERPROOF FIRESTOPPING FOR FIRE RATED FLOOR CONDITION.

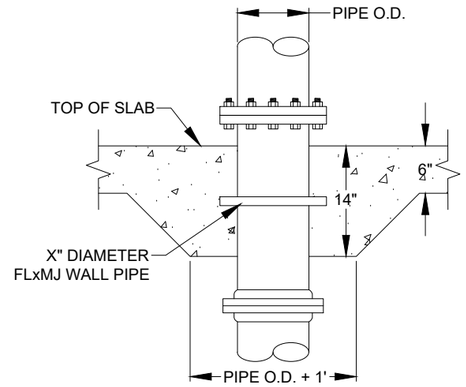

NOTE: INSTALL WALL PIPE FOR FLOOR PENETRATIONS AS PER MANUFACTURERS RECOMMENDATIONS REGARDING LAY LENGTH AND AND FL/MJ CLEARANCE FROM TOP/BOTTOM OF SLAB.

Typical Floor Penetration Detail (2)

NO SCALE

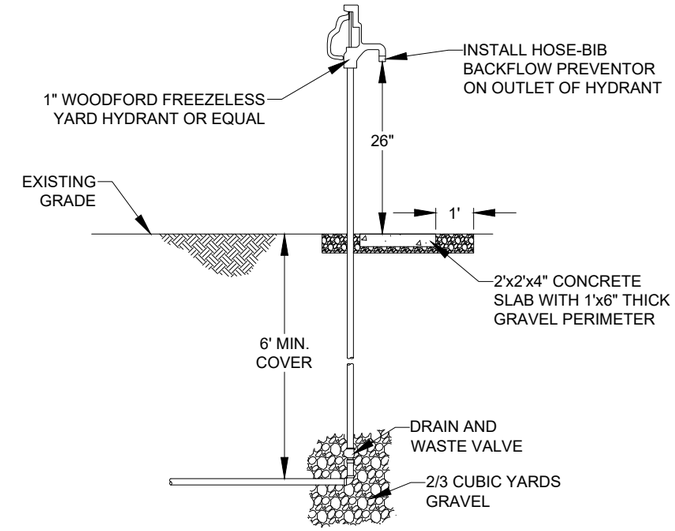

Typical Yard Hydrant Assembly Detail (3)

NO SCALE C-9

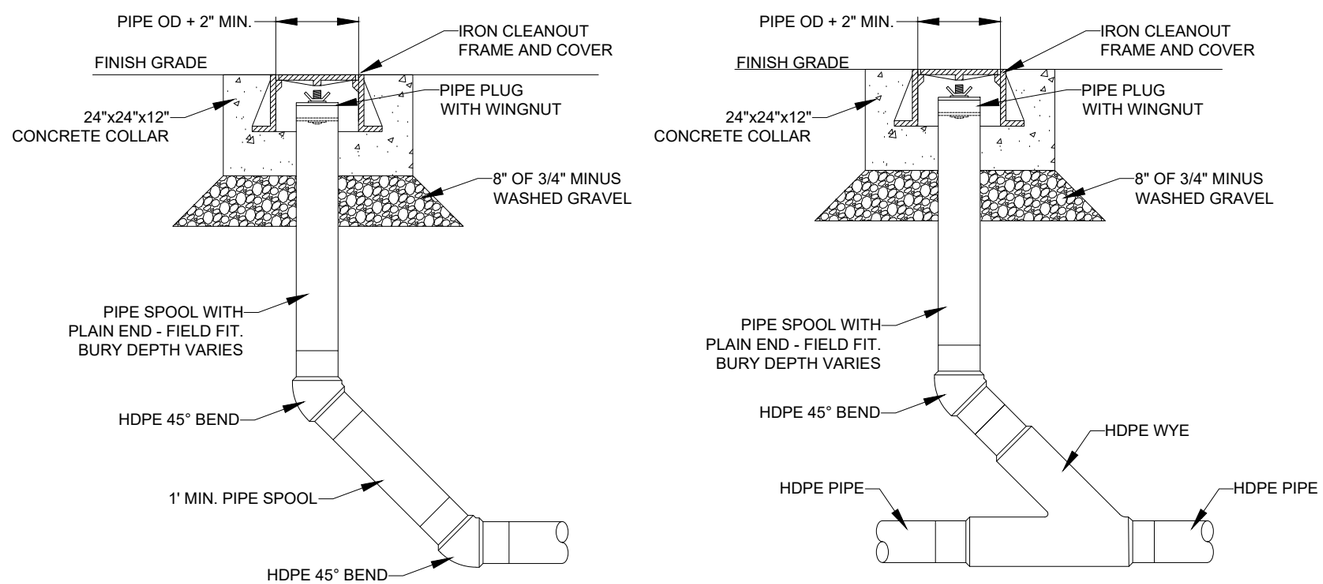

NOTE:
DEPENDING ON PIPING THE CLEANOUT IS CONNECTING TO THERE SHALL EITHER BE TWO 45° BENDS OR ONE 45° BEND AND ONE WYE.

Exterior Cleanouts (4)

NO SCALE

Revision	Date	By
30% Draft	8/1/24	AE
60% Draft	11/18/24	AE
90% Draft	1/31/25	AE
Final	2/14/25	AE

Revision: Final
Plot Scale: 1:2
Drawn By: A.Eckhart, P.E.
Approved By: P.Montgomery, P.E.
Checked By: A.Eckhart, P.E.
Designed By: P.Montgomery, P.E.

Engineer

Anderson~Montgomery CONSULTING ENGINEERS
1064 N. Warren
Helena, MT 59601
Phone (406) 449-3303

Owner: City Of Missoula

Project Title: Garden City Compost Facility Improvements

Sheet Title: **Civil Details**

Sheet: **CD-3**

X:\MISSOULA COMPOST\DESIGN\DRAWINGS\Sheets\5 – Civil Details\CD-3 Civil Details.dwg SAVED: 2/7/25 PRINTED: 2/11/25 BY: ADAM

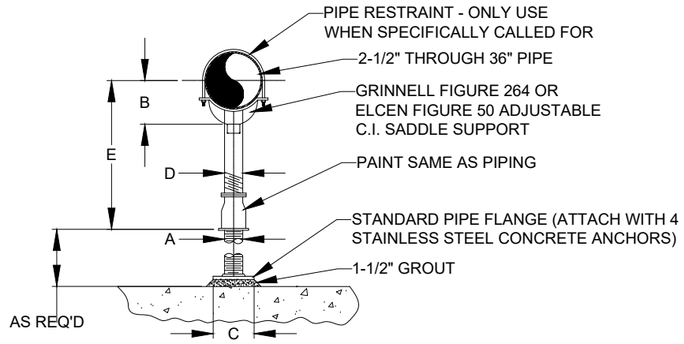

NOTES:
- PROVIDE NEOPRENE WAFFLE ISOLATION PAD. SIMILAR TO MASON TYPE "W" OR KORFUND KORPAD40. UNDER SUPPORT FOOT WHEN PIPING IS ISOLATED OR SUPPORT IS ADJACENT TO MECHANICAL EQUIPMENT.
- FOR BASE HEIGHT AND FLANGE DIMENSIONS, SEE TABLE BELOW.

DIMENSION TABLE

PIPE SIZE	A	B	C	D	E	
					MIN	MAX
2-1/2"	2-1/2"	3-1/2"	9"	1-1/2"	8"	13"
3"	2-1/2"	3-3/4"	9"	1-1/2"	8-1/4"	13-1/4"
3-1/2"	2-1/2"	4"	9"	1-1/2"	8-1/2"	13-1/2"
4"	3"	4-1/4"	9"	2-1/2"	9-1/4"	14"
5"	3"	4-7/8"	9"	2-1/2"	10"	14-3/4"
6"	3"	5-1/2"	9"	2-1/2"	10-1/2"	15-1/4"
8"	3"	6-7/8"	9"	2-1/2"	11-3/4"	16-1/2"
10"	3"	8-1/2"	9"	2-1/2"	13-1/2"	18-1/4"
12"	3"	9-15/16"	9"	2-1/2"	15"	19-3/4"
14"	4"	10-15/16"	11"	3"	16-1/4"	20-3/4"
16"	4"	12-3/8"	11"	3"	17-3/4"	22-1/4"

Pipe Support Detail (1)
NO SCALE

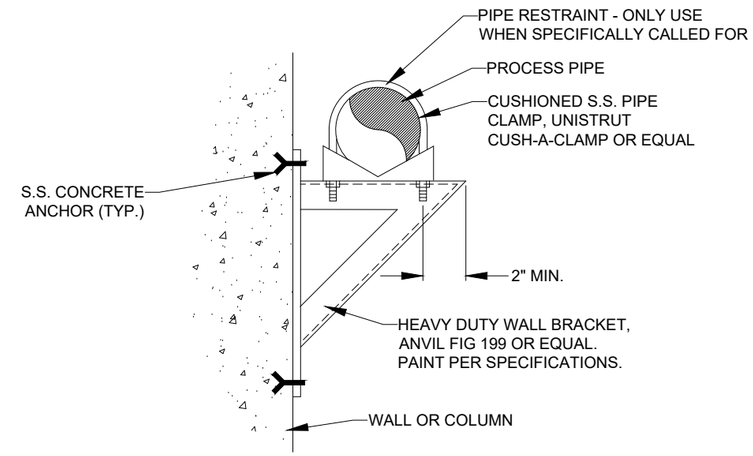

NOTE:
PROVIDE S.S. COMPONENTS FOR SUBMERGED APPLICATIONS OR WHEN SUPPORT IS INSIDE A BURIED STRUCTURE.

Heavy Duty Pipe Support (2)
NO SCALE

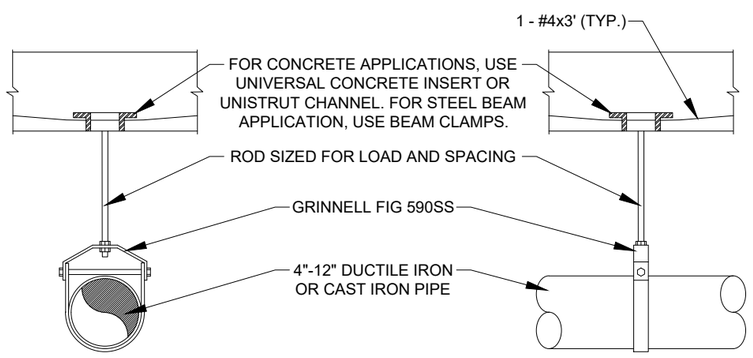

NOTE:
- TOTAL LOADING ON EACH CONCRETE INSERT OR OTHER TYPE HANGER ROD ANCHOR SHALL NOT EXCEED MANUFACTURER'S RECOMMENDED LOADING.
- FOR INSULATED PIPES, USE GRINNELL FIGURE 167 (INSULATION PROTECTION SHIELD).
- FOR STEEL PIPE USE GRINNELL FIGURE 260.

Typical Pipe Hanger (3)
NO SCALE

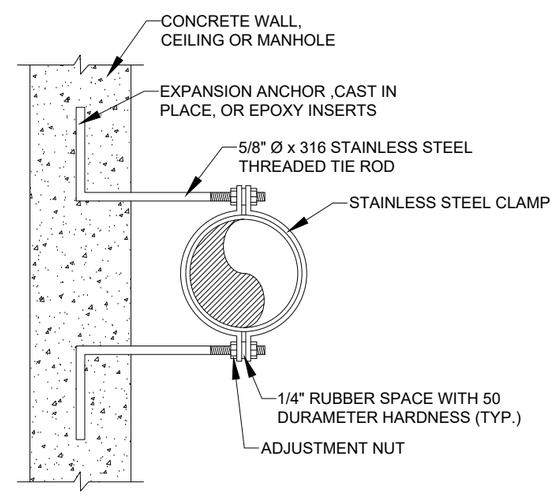

NOTES:
CLAMP, BOLTS AND NUTS TO BE STAINLESS STEEL AND SIZED AS REQUIRED.

Vertical Pipe Support (4)
NO SCALE

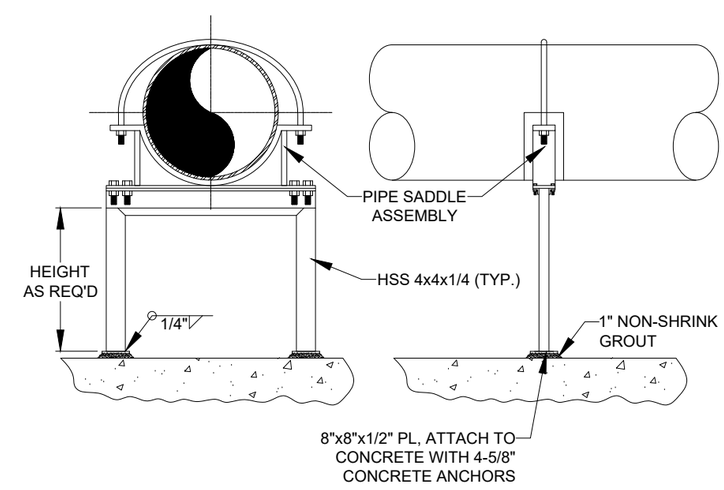

Biofilter Header Pipe Support (5)
NO SCALE

Revision	Date	By
30% Draft	8/1/24	AE
60% Draft	11/18/24	AE
90% Draft	1/31/25	AE
Final	2/14/25	AE

Revision: Final
Plot Scale: 1:2
Drawn By: A.Eckhart, P.E.
Approved By: P.Montgomery, P.E.
Checked By: A.Eckhart, P.E.
Designed By: P.Montgomery, P.E.

Engineer
Anderson~Montgomery
CONSULTING ENGINEERS
1064 N. Warren
Helena, MT 59601
Phone (406) 449-3303

Owner
City Of Missoula

Project Title
Garden City Compost Facility Improvements

Sheet Title
Pipe Supports

Sheet
CD-4

X:\MISSOULA COMPOST\DESIGN\DRAWINGS\Sheets\5 - Civil Details\CD-4 Pipe Supports.dwg SAVED: 2/7/25 PRINTED: 2/11/25 BY: ADAM

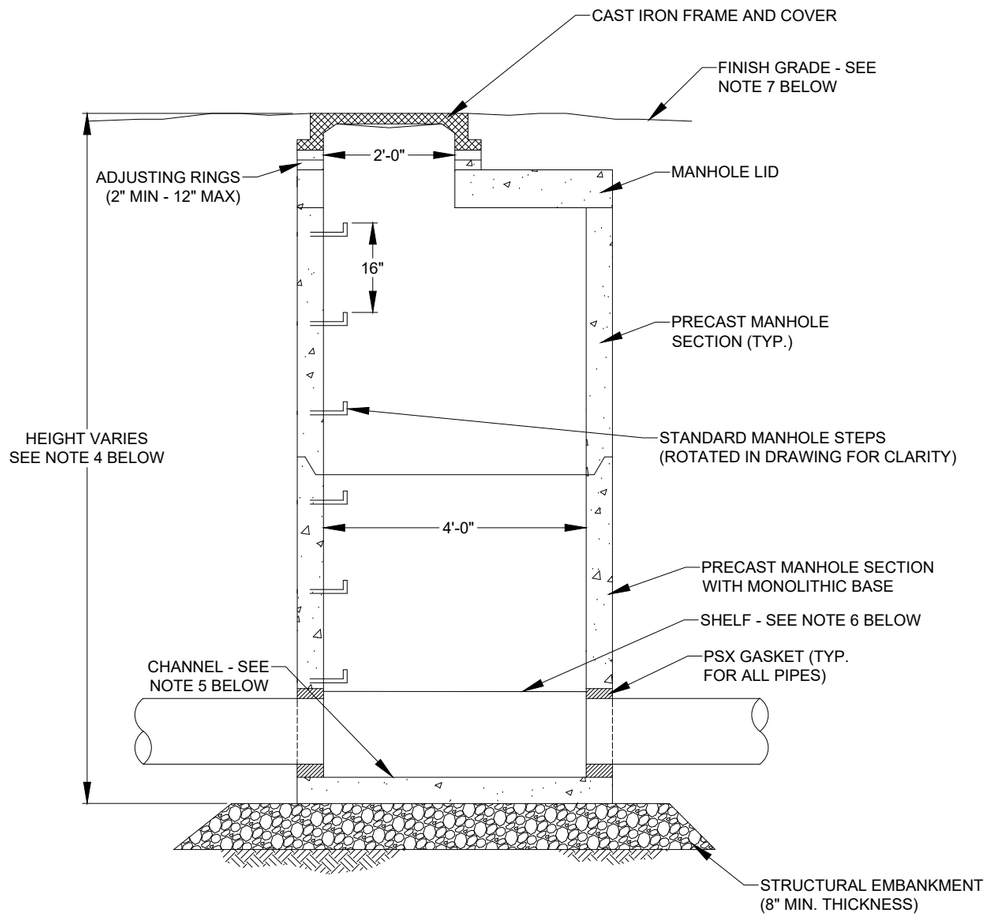

NOTES:

1. PRECAST CONCRETE MANHOLES SHALL CONFORM TO ASTM C478.
2. ALL JOINTS SHALL BE WATERTIGHT. MATERIAL SHALL BE RUBBER-NEK OR APPROVED EQUAL.
3. MANHOLE COVER SHALL BE UNMARKED.
4. SEE PLAN AND PROFILE SHEETS FOR MANHOLE DIMENSIONS. ECCENTRIC MANHOLE SECTIONS WILL NOT BE ALLOWED. PROVIDE RISER SECTION AND COVER SLAB.
5. CHANNEL SHALL BE HALF THE DIAMETER OF THE PIPE.
6. CONCRETE SHELVES SHALL SLOPE TOWARD THE CHANNEL(S) AT 1" PER FOOT.
7. PROVIDE FILL MATERIAL, SLOPED AT 2 HORIZONTAL TO 1 VERTICAL FOR COVERS SET ABOVE EXISTING GROUND LEVEL.
8. CONSTRUCT SHELVES PER LATEST EDITION OF MPW.
9. PROVIDE 3" GROUT SPACE AROUND ALL PIPE. ALL JOINTS SHALL BE GROUTED WATERTIGHT. CONFORM TO MANHOLE LINER MANUFACTURER'S RECOMMENDATIONS.
10. NEW MANHOLES SHALL BE COATED WITH AN EXTERIOR DAMPPROOFING; BITUMINOUS COAT OR COAL TAR EPOXY.
11. MANHOLES SHALL BE LINED WITH A DURA-PLATE 100 LINER SYSTEM MANUFACTURED BY A-LOK PRODUCTS, INC. OR APPROVED EQUAL. MANHOLE SHALL BE CAST WITH LINER IN PLACE AND INSTALLED PER MANUFACTURER'S RECOMMENDATIONS.
12. FINISHED MANHOLES SHALL BE IN ACCORDANCE WITH LATEST EDITION OF MPWSS STANDARD SPECIFICATIONS.
13. STEPS SHALL BE PLACED AT 90° TO THE LINE OF SEWER PIPE WHERE APPLICABLE. STEPS ARE ROTATED IN DRAWING FOR CLARITY.
14. PROVIDE ALL SHORING NECESSARY TO PROTECT EXISTING STRUCTURES AND INFRASTRUCTURE.
15. MANHOLES SHALL EITHER UTILIZE A BARREL SECTION & A FLAT LID OR A CONICAL SECTION, SEE DRAWINGS FOR SPECIFIC MANHOLE DETAILS.

Standard Sanitary Sewer Manhole (1)

NO SCALE

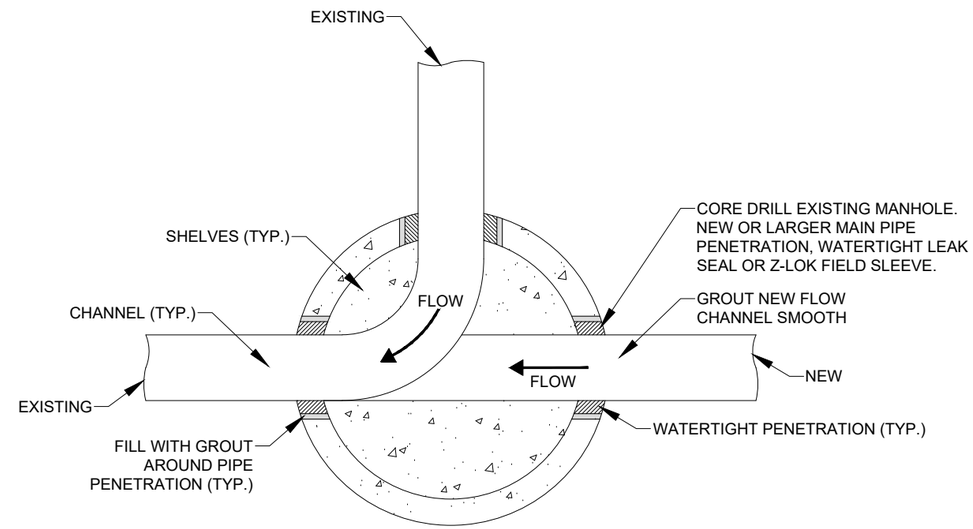

CONFIGURATION MAY VARY

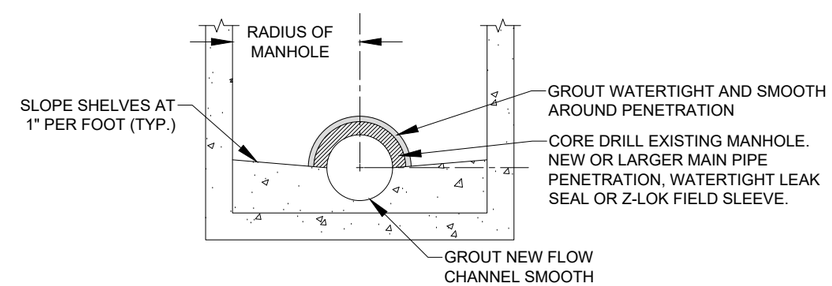

CHANNEL SECTION

NOTES:

- SLOPE ALL SHELVES TO CHANNEL AT 1" PER FOOT.
- ALL NEW HOLES SHALL BE CORED AND LARGE ENOUGH FOR WATERTIGHT SEAL. GROUT SEAL IN PLACE WITH NON-SHRINK GROUT.
- ROTATE CONE AND STAIRS SUCH THAT STAIRS ARE NOT ABOVE CHANNELS.
- RECONSTRUCT FLOW CHANNEL IN ACCORDANCE WITH MPWSS STANDARD DRAWING NO. 02720-7.
- MANHOLE CONFIGURATIONS MAY VARY FROM DETAIL DEPICTED ABOVE.

Modify Existing Manhole (2)

NO SCALE

Revision	Date	By
30% Draft	8/1/24	AE
60% Draft	11/18/24	AE
90% Draft	1/31/25	AE
Final	2/14/25	AE

Revision: Final
Plot Scale: 1:2
Drawn By: A.Eckhart, P.E.
Approved By: P.Montgomery, P.E.
Checked By: A.Eckhart, P.E.
Designed By: P.Montgomery, P.E.

Engineer

Anderson~Montgomery CONSULTING ENGINEERS
1064 N. Warren
Helena, MT 59601
Phone (406) 449-3303

Owner: City Of Missoula

Project Title: Garden City Compost Facility Improvements

Sheet Title: **Manhole Details**

Sheet: **CD-5**

X:\MISSOULA COMPOST\DESIGN\DRAWINGS\Sheets\5 - Civil Details\CD-5 Manhole Details.dwg SAVED: 2/7/25 PRINTED: 2/11/25 BY: ADAM

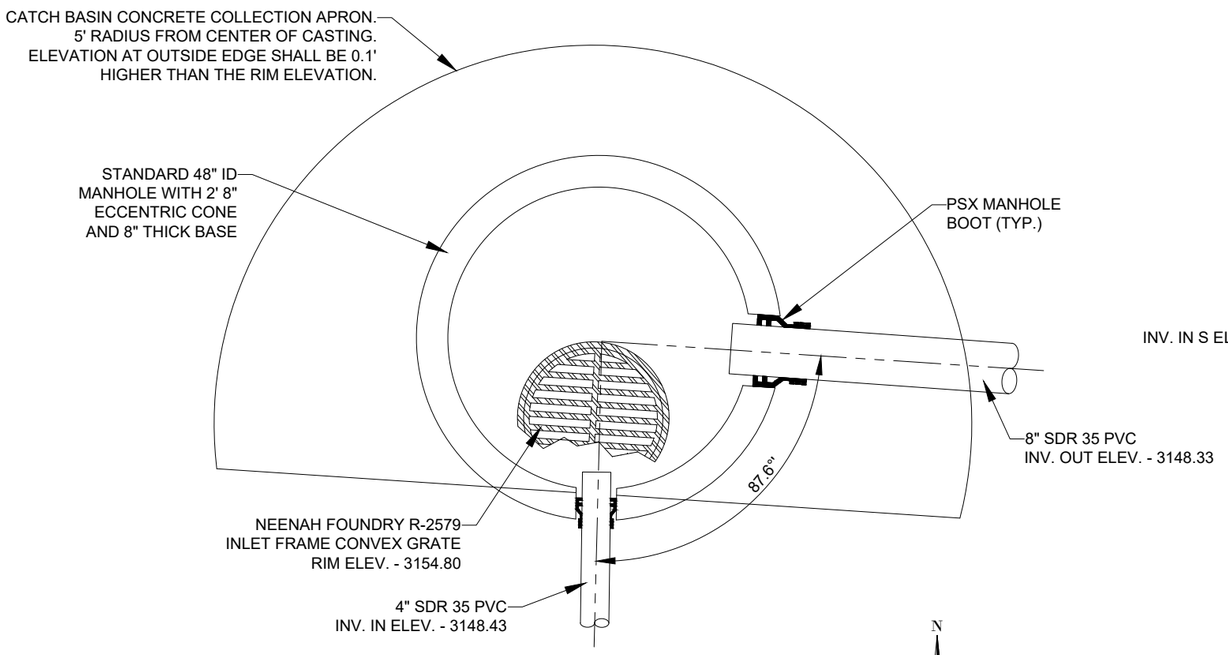

Catch Basin 1 Plan (1)

1 0.5 0 1 2
Feet

NOTE:
- CONCRETE HATCHING NOT SHOWN FOR DRAWING CLARITY.

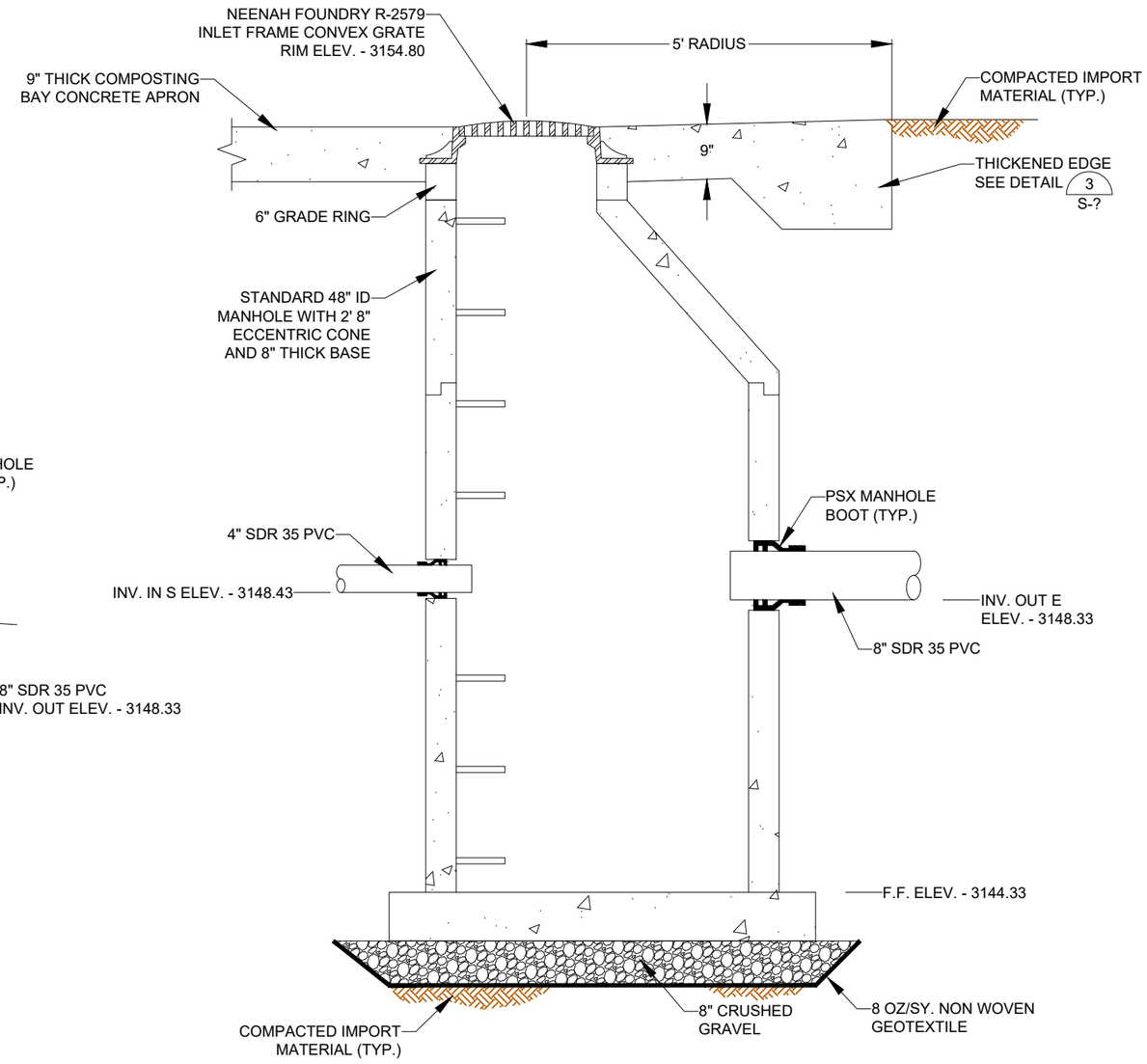

Catch Basin 1 Section

1 0.5 0 1 2
Feet

NOTE:
- PIPES AND CONCRETE SLAB/APRON ROTATED FOR DRAWING CLARITY.

Revision	Date	By
30% Draft	8/1/24	AE
60% Draft	11/18/24	AE
90% Draft	1/31/25	AE
Final	2/14/25	AE

Revision: Final
Plot Scale: 1:2
Drawn By: A.Eckhart, P.E.
Approved By: P.Montgomery, P.E.
Checked By: A.Eckhart, P.E.
Designed By: P.Montgomery, P.E.

Engineer
Anderson~Montgomery
CONSULTING ENGINEERS
1064 N. Warren
Helena, MT 59601
Phone (406) 449-3303

Owner
City Of Missoula

Project Title
Garden City Compost Facility Improvements

Sheet Title
Catch Basin 1 Details

Sheet
CD-6

X:\MISSOULA COMPOST\DESIGN\DRAWINGS\Sheets\5 - Civil Details\CD-6, CD-7, & CD-8 Catch Basin Details.dwg SAVED: 2/7/25 PRINTED: 2/11/25 BY: ADAM

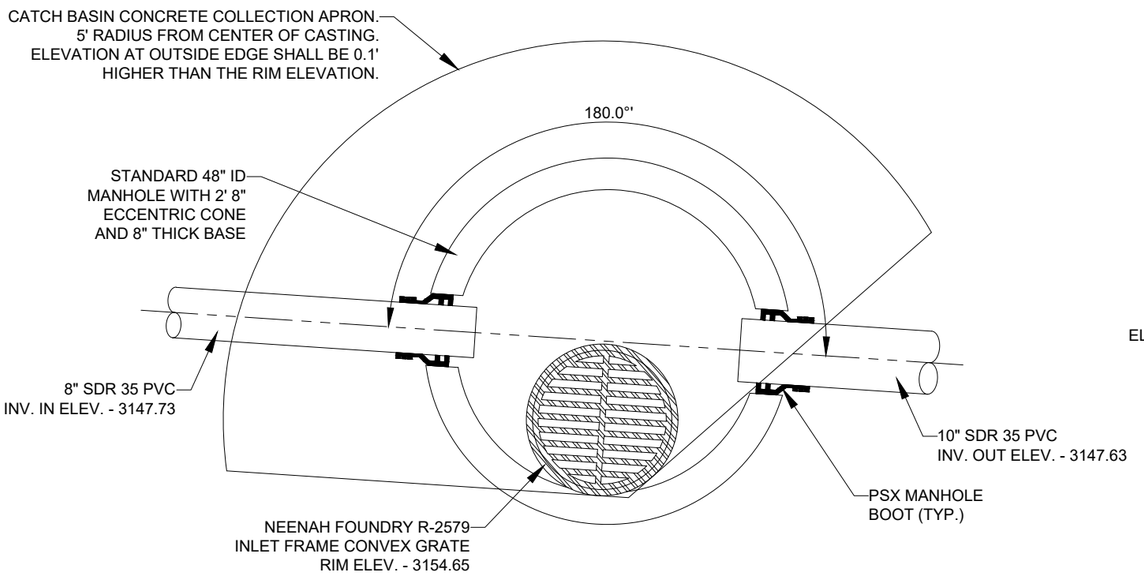

Catch Basin 2 Plan 1

1 0.5 0 1 2
Feet

N

NOTE:
- CONCRETE HATCHING NOT SHOWN FOR DRAWING CLARITY.

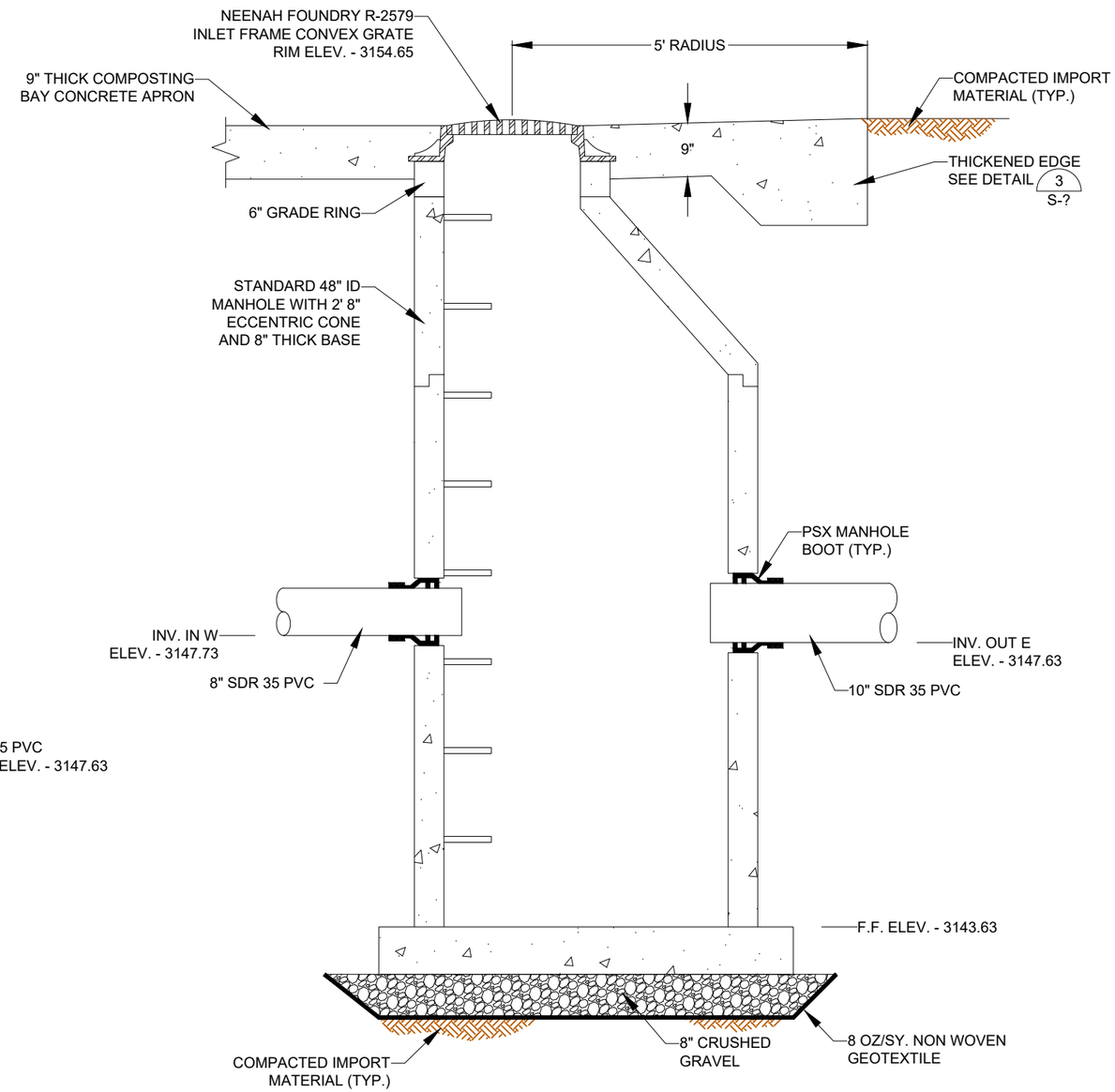

Catch Basin 2 Section

1 0.5 0 1 2
Feet

NOTE:
- PIPES AND CONCRETE SLAB/APRON ROTATED FOR DRAWING CLARITY.

Revision	Date	By
30% Draft	8/1/24	AE
60% Draft	11/18/24	AE
90% Draft	1/31/25	AE
Final	2/14/25	AE

Revision: Final
Plot Scale: 1:2
Drawn By: A.Eckhart, P.E.
Approved By: P.Montgomery, P.E.
Checked By: A.Eckhart, P.E.
Designed By: P.Montgomery, P.E.

Engineer
Anderson~Montgomery
CONSULTING ENGINEERS
1064 N. Warren
Helena, MT 59601
Phone (406) 449-3303

Owner: City Of Missoula

Project Title: Garden City Compost Facility Improvements

Sheet Title: **Catch Basin 2 Details**

Sheet: **CD-7**

X:\MISSOULA COMPOST\DESIGN\DRAWINGS\Sheets\5 - Civil Details\CD-6, CD-7, & CD-8 Catch Basin Details.dwg SAVED: 2/7/25 PRINTED: 2/11/25 BY: ADAM

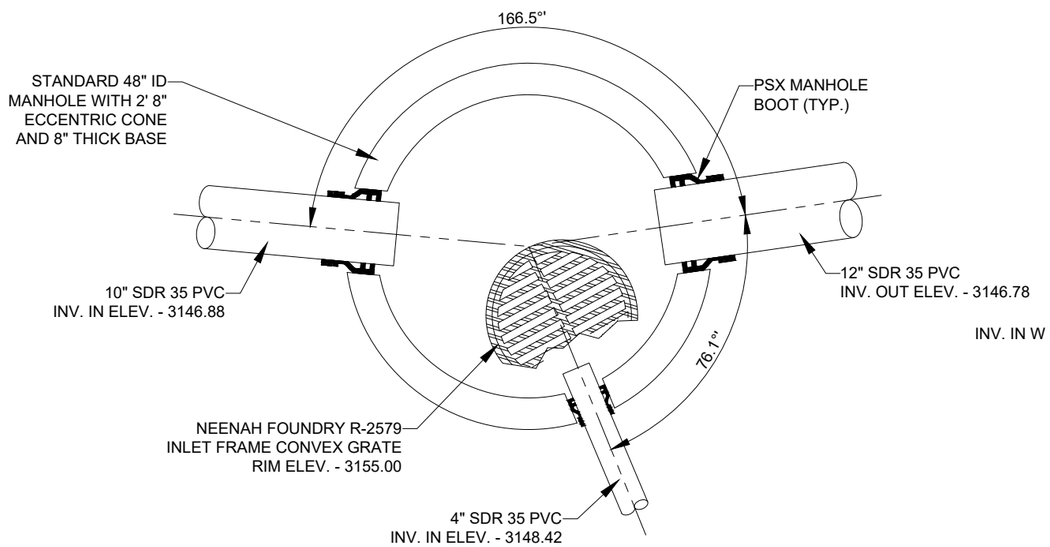

Catch Basin 3 Plan

1

1 0.5 0 1 2
Feet

N

NOTE:
- CONCRETE HATCHING NOT SHOWN FOR DRAWING CLARITY.

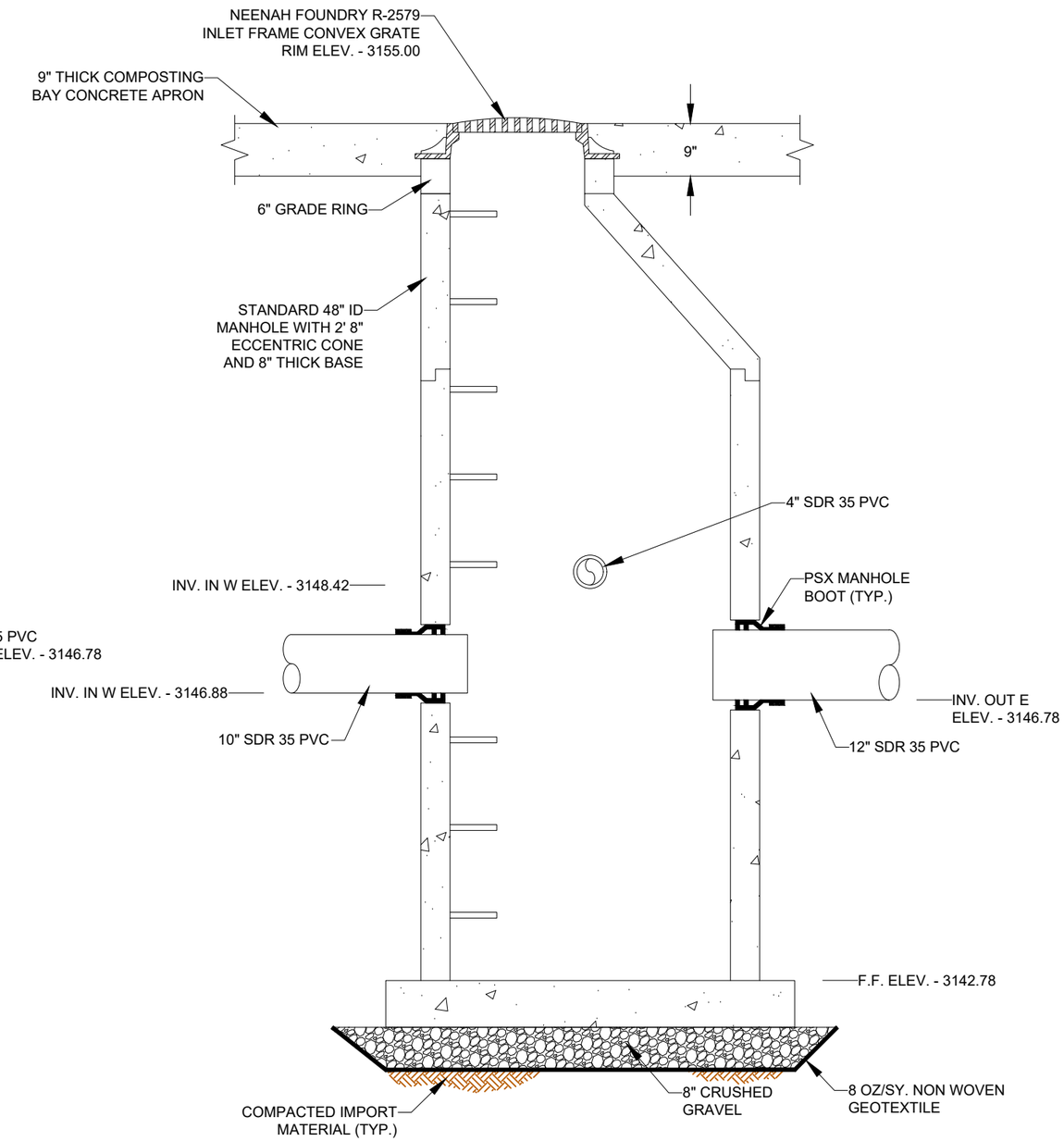

Catch Basin 3 Section

1 0.5 0 1 2
Feet

NOTE:
- PIPES AND CONCRETE SLAB/APRON ROTATED FOR DRAWING CLARITY.

Revision	Date	By
30% Draft	8/1/24	AE
60% Draft	11/18/24	AE
90% Draft	1/31/25	AE
Final	2/14/25	AE

Revision: Final
Plot Scale: 1:2
Drawn By: A.Eckhart, P.E.
Approved By: P.Montgomery, P.E.
Checked By: A.Eckhart, P.E.
Designed By: P.Montgomery, P.E.

Engineer
Anderson~Montgomery
CONSULTING ENGINEERS
1064 N. Warren
Helena, MT 59601
Phone (406) 449-3303

Owner
City Of Missoula

Project Title
Garden City Compost Facility Improvements

Sheet Title
Catch Basin 3 Details

Sheet
CD-8

X:\MISSOULA COMPOST\DESIGN\DRAWINGS\Sheets\5 - Civil Details\CD-6, CD-7, & CD-8 Catch Basin Details.dwg SAVED: 2/7/25 PRINTED: 2/11/25 BY: ADAM

CALLOUTS:

① - 8' DIAMETER CONCRETE STRUCTURE - 8" THICK TOP AND BOTTOM, BOTTOM SHALL HAVE A 10'-4" DIAMETER, TOP SHALL HAVE A 6' DIAMETER HOLE CENTERED IN THE LID.
② - FIBERGLASS REINFORCED PLASTIC ENCLOSURE BY GORMAN RUPP
③ - VAUGHN CHOPPER PUMP WITH SLIDE RAIL - MODEL SK41 (TYP. OF 2)
④ - 12" SDR 35 PVC FROM CATCH BASIN 3 - INV. ELEV. 3146.06
⑤ - PSX MANHOLE BOOT
⑥ - 4" DI PIPE DISCHARGE - INV. ELEV. 3148.60
⑦ - LINKSEAL
⑧ - 2" SCH. 40 STEEL PIPE GUIDE RAIL WITH SUPPORT BRACKETS (TYP. OF 4)
⑨ - UPPER GUIDE RAIL BRACKET
⑩ - COMPACTED NATIVE MATERIAL
⑪ - 24" OF STRUCTURAL FILL
⑫ - PROPEX GEOTEXT 801 NON-WOVEN GEO-TEXTILE
⑬ - 8"x8" FILLET - NON-SHRINK GROUT
⑭ - 4" FLANGED CHECK VALVE (TYP. OF 2)
⑮ - 4" FLANGED PLUG VALVE (TYP. OF 2)
⑯ - 4" DI FL 90° BEND (TYP. OF 3)
⑰ - 4" DI FL TEE
⑱ - LIFT STATION VENT
⑲ - SUBMERSIBLE PUMP OIL RESERVOIR
⑳ - SUBMERSIBLE PUMP OIL HOSE (TYP. OF 2)
㉑ - LIFT STATION CONTROL PANEL
㉒ - 1-1/2" HDPE SDR 11 FROM E-ONE LIFT STATION - INV. IN ELEV. 3146.06

NOTES:

- ALL FORCEMAIN PIPING SHALL BE 4" DUCTILE IRON
- ATTACH PUMP LIFTING CHAIN TO STRUCTURE AS PER MANUFACTURER'S RECOMMENDATIONS.
- MOUNT OIL RESERVOIR IN ABOVE GROUND STRUCTURE. ROUTE OIL HOSE PER MANUFACTURER'S RECOMMENDATIONS.
- PUMP SHALL UTILIZE A BASE BEND THAT IS COMPATIBLE WITH THE PIPING GALLERY ENCLOSURE.

PUMP ELEVATIONS:

3146.91 - HIGH LEVEL ALARM
3145.41 - LAG PUMP ON
3144.41 - LEAD PUMP ON
3139.41 - PUMP OFF
3138.41 - LOW LEVEL ALARM

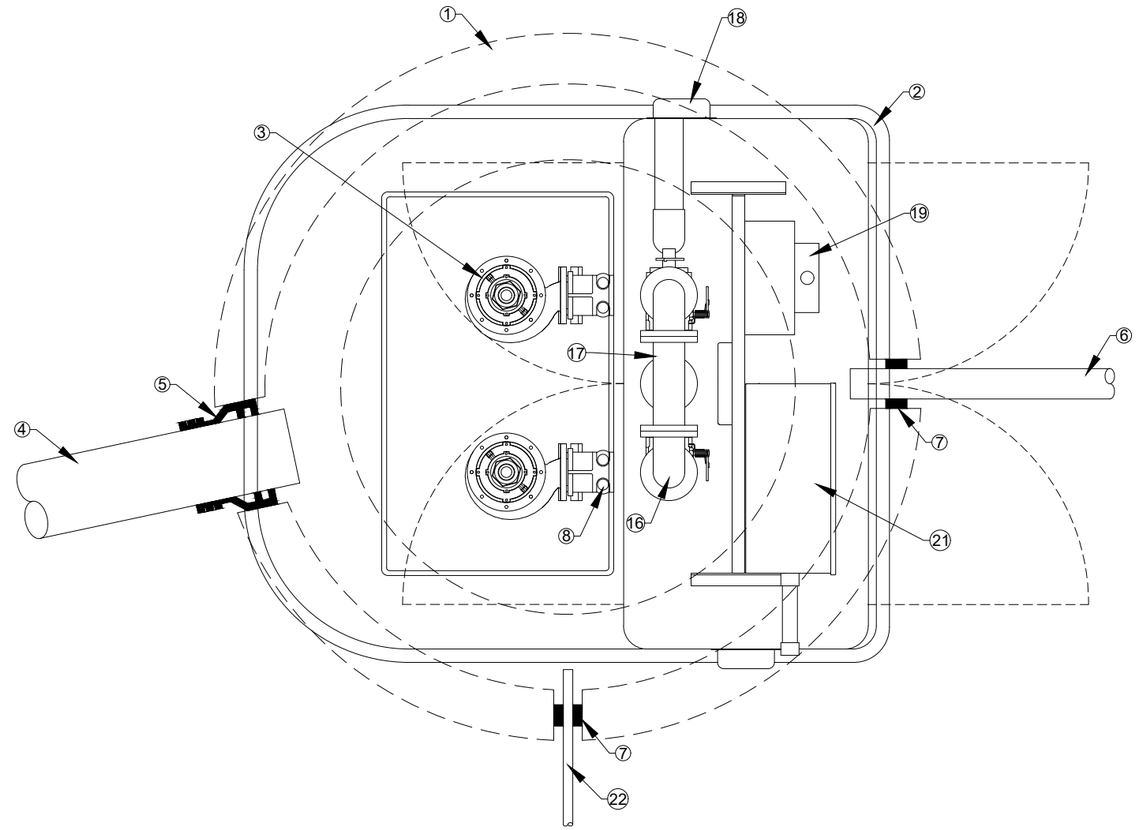

Main Lift Station Plan 1

SCALE 1 0.5 0 1 2 Feet

N

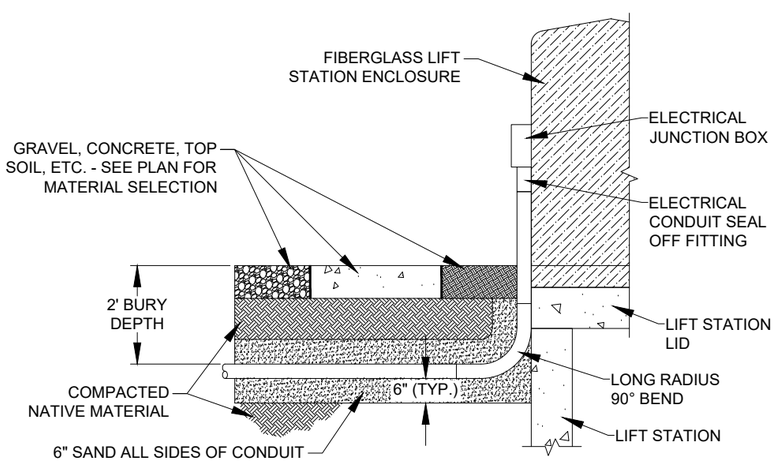

Typical Conduit Detail 1 CD-9

NO SCALE

Revision	Date	By
30% Draft	8/1/24	AE
60% Draft	11/18/24	AE
90% Draft	1/31/25	AE
Final	2/14/25	AE

Revision: Final
Plot Scale: 1:2
Drawn By: A.Eckhart, P.E.
Approved By: P.Montgomery, P.E.
Checked By: A.Eckhart, P.E.
Designed By: P.Montgomery, P.E.

Engineer: Anderson~Montgomery CONSULTING ENGINEERS
1064 N. Warren
Helena, MT 59601
Phone (406) 449-3303

Owner: City Of Missoula

Project Title: Garden City Compost Facility Improvements

Sheet Title: **Lift Station Plan**

Sheet: **CD-9**

X:\MISSOULA COMPOST\DESIGN\DRAWINGS\Sheets\5 – Civil Details\CD-9 & CD-10 Lift Station Details.dwg SAVED: 2/7/25 PRINTED: 2/11/25 BY: ADAM

CALLOUTS:

① - 8' DIAMETER CONCRETE STRUCTURE - 8" THICK TOP AND BOTTOM, BOTTOM SHALL HAVE A 10'-4" DIAMETER, TOP SHALL HAVE A 6' DIAMETER HOLE CENTERED IN THE LID.
② - FIBERGLASS REINFORCED PLASTIC ENCLOSURE BY GORMAN RUPP
③ - VAUGHN CHOPPER PUMP WITH SLIDE RAIL - MODEL SK41 (TYP. OF 2)
④ - 12" SDR 35 PVC FROM CATCH BASIN 3 - INV. ELEV. 3146.06
⑤ - PSX MANHOLE BOOT
⑥ - 4" DI PIPE DISCHARGE - INV. ELEV. 3148.60
⑦ - LINKSEAL
⑧ - 2" SCH. 40 STEEL PIPE GUIDE RAIL WITH SUPPORT BRACKETS (TYP. OF 4)
⑨ - UPPER GUIDE RAIL BRACKET
⑩ - COMPACTED NATIVE MATERIAL
⑪ - 24" OF STRUCTURAL FILL
⑫ - PROPEX GEOTEXT 801 NON-WOVEN GEO-TEXTILE
⑬ - 8"x8" FILLET - NON-SHRINK GROUT
⑭ - 4" FLANGED CHECK VALVE (TYP. OF 2)
⑮ - 4" FLANGED PLUG VALVE (TYP. OF 2)
⑯ - 4" DI FL 90° BEND (TYP. OF 3)
⑰ - 4" DI FL TEE
⑱ - LIFT STATION VENT
⑲ - SUBMERSIBLE PUMP OIL RESERVOIR
⑳ - SUBMERSIBLE PUMP OIL HOSE (TYP. OF 2)
㉑ - LIFT STATION CONTROL PANEL
㉒ - 1-1/2" HDPE SDR 11 FROM E-ONE LIFT STATION - INV. IN ELEV. 3146.06

NOTES:

- ALL FORCEMAIN PIPING SHALL BE 4" DUCTILE IRON
- ATTACH PUMP LIFTING CHAIN TO STRUCTURE AS PER MANUFACTURER'S RECOMMENDATIONS.
- MOUNT OIL RESERVOIR IN ABOVE GROUND STRUCTURE. ROUTE OIL HOSE PER MANUFACTURER'S RECOMMENDATIONS.
- PUMP SHALL UTILIZE A BASE BEND THAT IS COMPATIBLE WITH THE PIPING GALLERY ENCLOSURE.

PUMP ELEVATIONS:

3146.91 - HIGH LEVEL ALARM
3145.41 - LAG PUMP ON
3144.41 - LEAD PUMP ON
3139.41 - PUMP OFF
3138.41 - LOW LEVEL ALARM

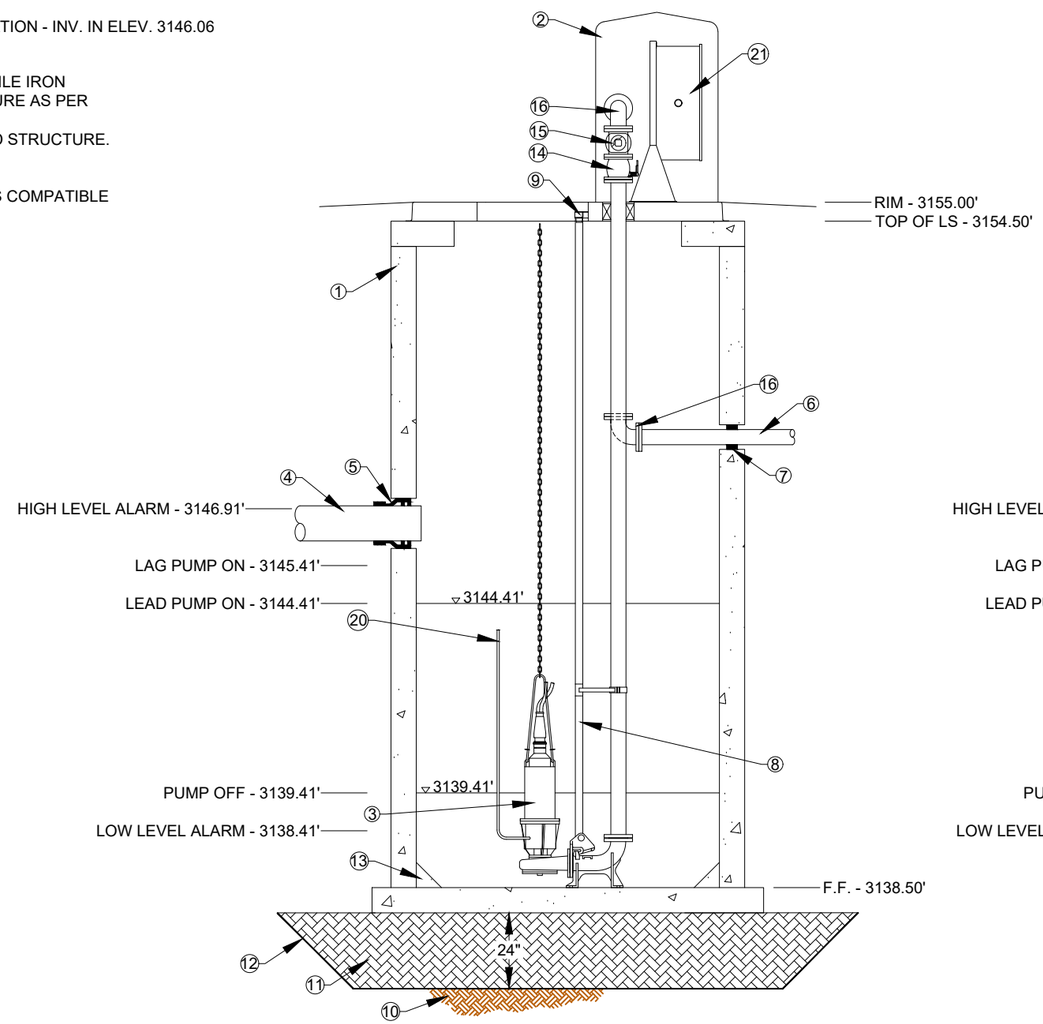

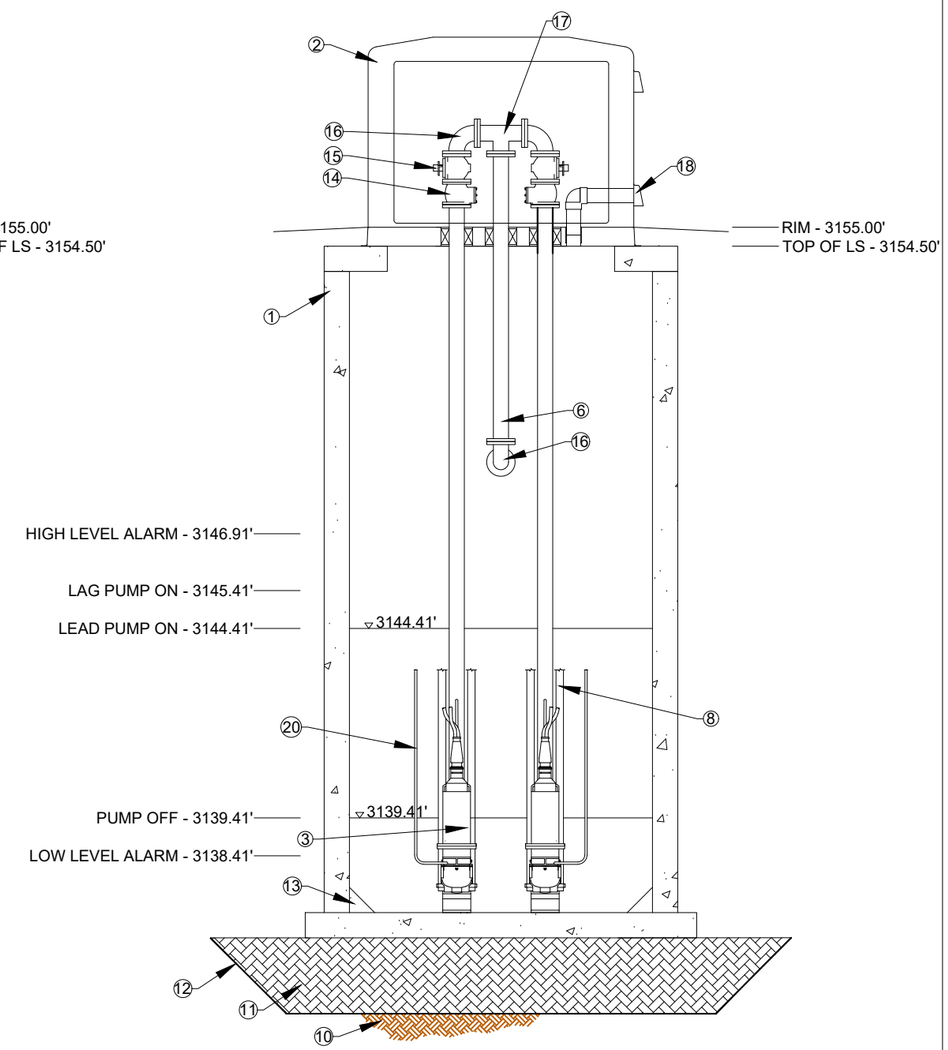

Main Lift Station Sections (A / CD-9)

SCALE 2 1 0 2 4 Feet

Revision	Date	By
30% Draft	8/1/24	AE
60% Draft	11/18/24	AE
90% Draft	1/31/25	AE
Final	2/14/25	AE

Revision: Final
Plot Scale: 1:2
Drawn By: A.Eckhart, P.E.
Approved By: P.Montgomery, P.E.
Checked By: A.Eckhart, P.E.
Designed By: P.Montgomery, P.E.

Engineer: Anderson~Montgomery CONSULTING ENGINEERS
1064 N. Warren
Helena, MT 59601
Phone (406) 449-3303

Owner: City Of Missoula

Project Title: Garden City Compost Facility Improvements

Sheet Title: **Lift Station Section**

Sheet: **CD-10**

X:\MISSOULA COMPOST\DESIGN\DRAWINGS\Sheets\5 – Civil Details\CD-9 & CD-10 Lift Station Details.dwg SAVED: 2/7/25 PRINTED: 2/11/25 BY: ADAM

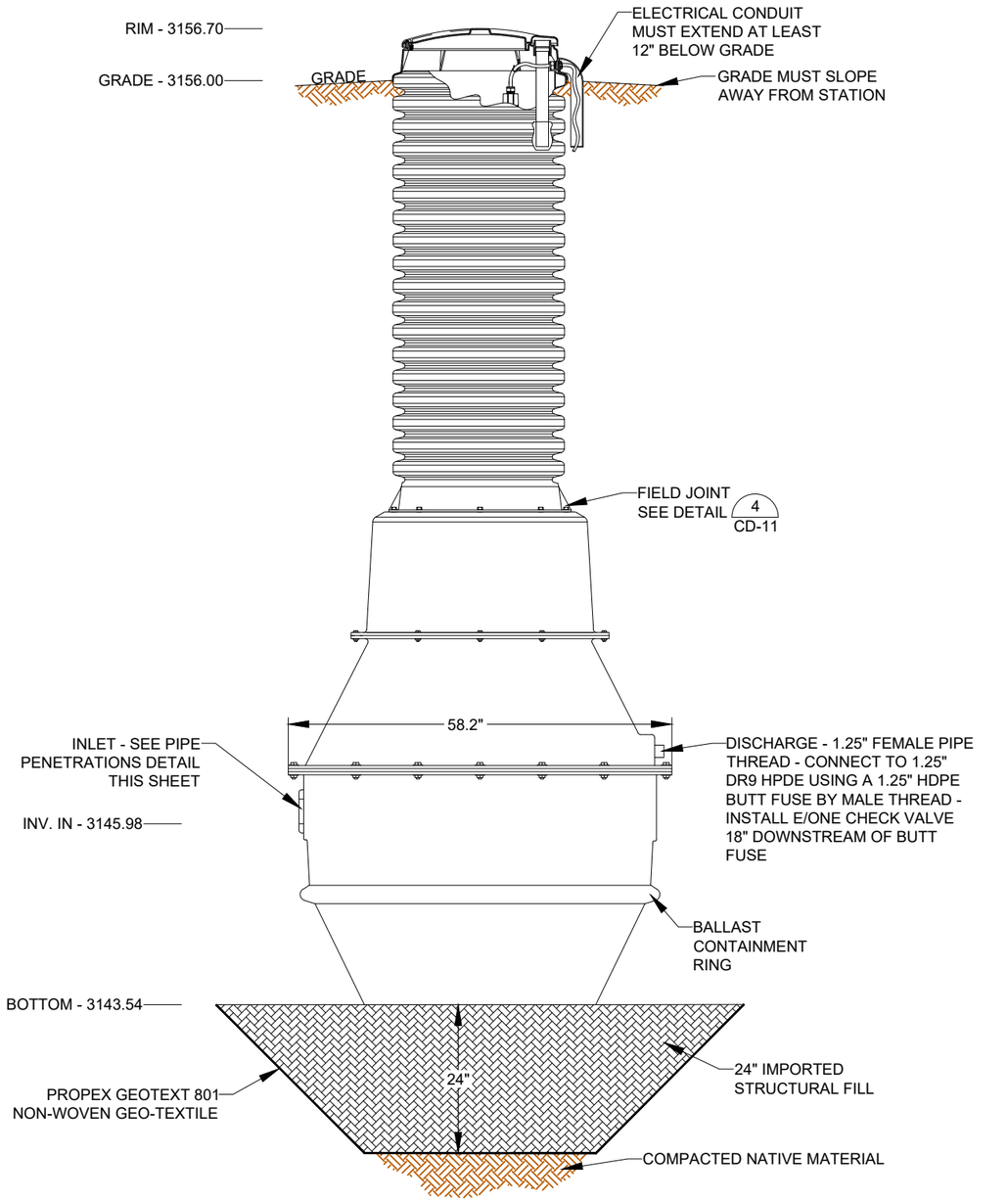

E-One Duplex Grinder Pump Lift Station (1)

1 0.5 0 1 2
Feet

NOTE:
PUMP STATION SHALL BE ENCASED IN PEA GRAVEL AS PER MANUFACTURER'S RECOMMENDATIONS. PEA GRAVEL NOT SHOWN FOR DRAWING CLARITY.

PUMP ELEVATIONS:
3145.79 - ALARM
3145.12 - PUMP ON
3144.79 - PUMP OFF

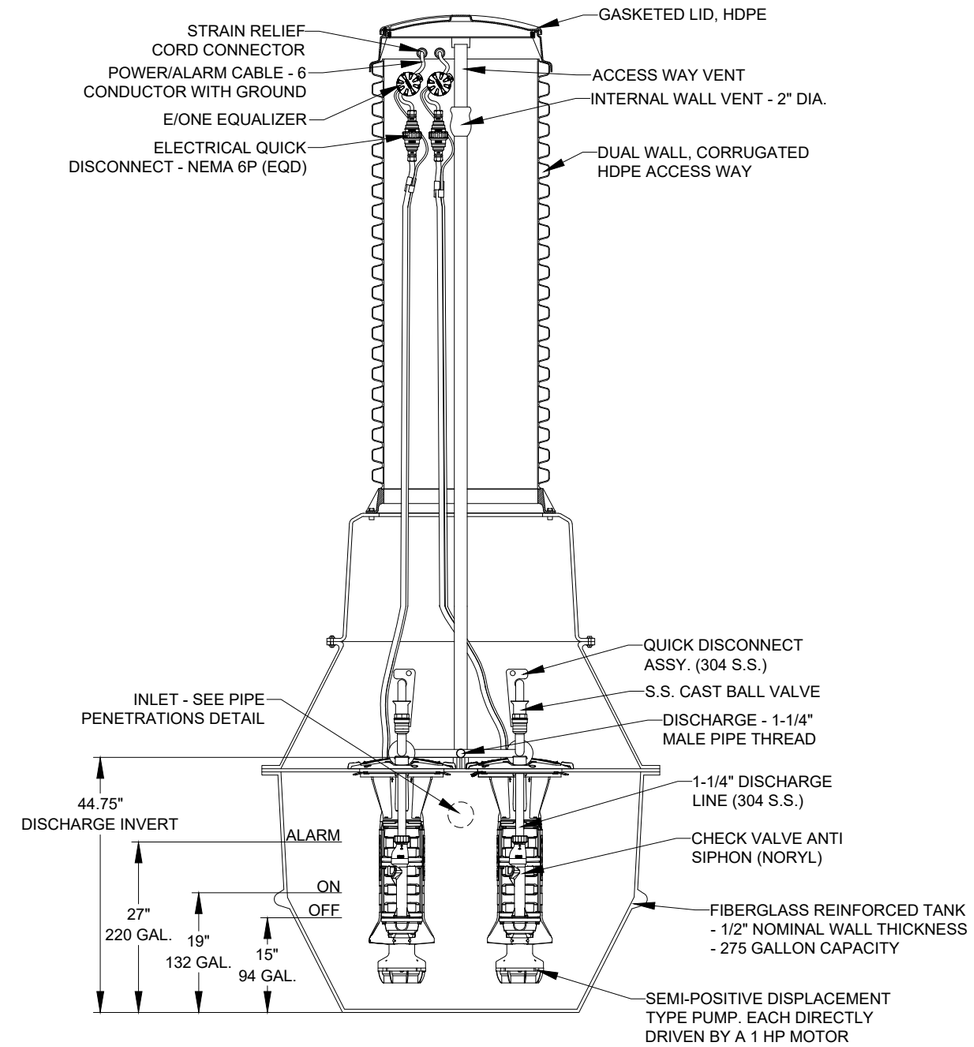

E-One Duplex Grinder Pump Lift Station (2) CD-11

1 0.5 0 1 2
Feet

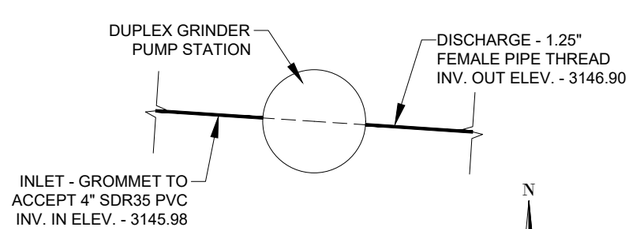

Pipe Penetration Detail (3) CD-11
NO SCALE

N

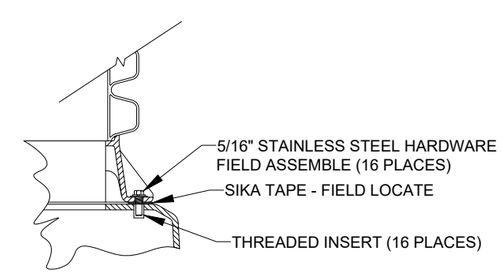

Field Joint Detail (4) CD-11
NO SCALE

Revision	Date	By
30% Draft	8/1/24	AE
60% Draft	11/18/24	AE
90% Draft	1/31/25	AE
Final	2/14/25	AE

Revision: Final
Plot Scale: 1:2
Drawn By: A.Eckhart, P.E.
Approved By: P.Montgomery, P.E.
Checked By: A.Eckhart, P.E.
Designed By: P.Montgomery, P.E.

Engineer
Anderson~Montgomery CONSULTING ENGINEERS
1064 N. Warren
Helena, MT 59601
Phone (406) 449-3303

Owner
City Of Missoula

Project Title
Garden City Compost Facility Improvements

Sheet Title
E-One Lift Station Details

Sheet
CD-11

X:\MISSOULA COMPOST\DESIGN\DRAWINGS\Sheets\5 - Civil Details\CD-11 E-One Lift Station Details.dwg SAVED: 2/7/25 PRINTED: 2/11/25 BY: ADAM

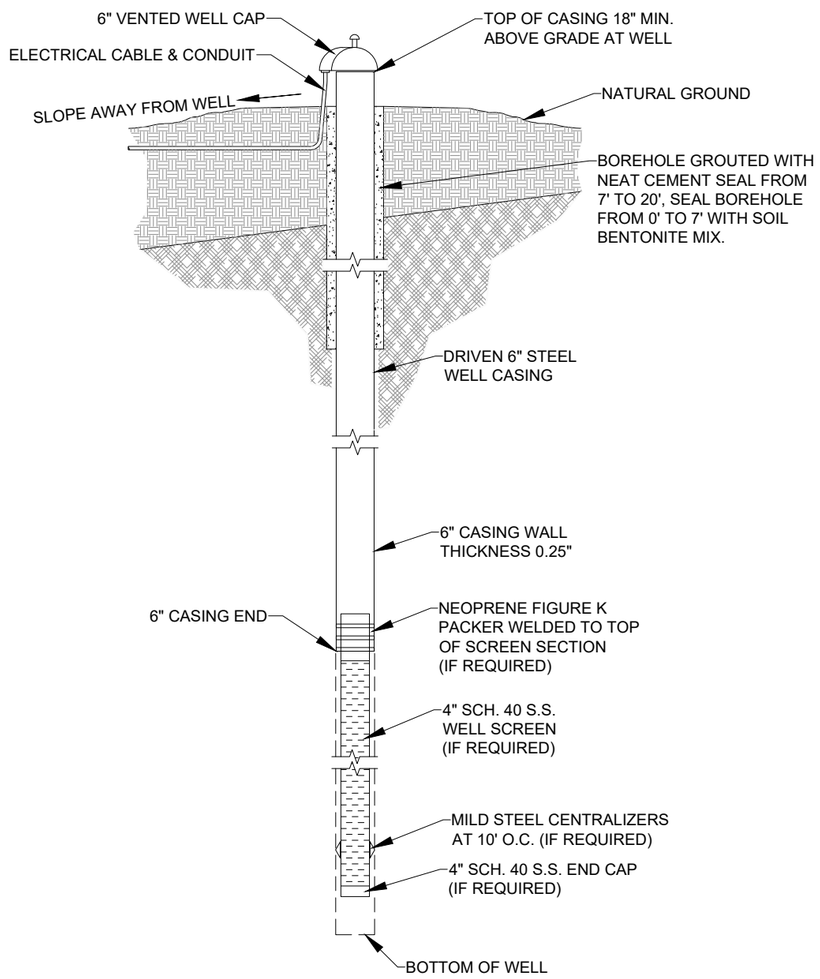

New Well Construction Detail (1 / C-9)
NO SCALE

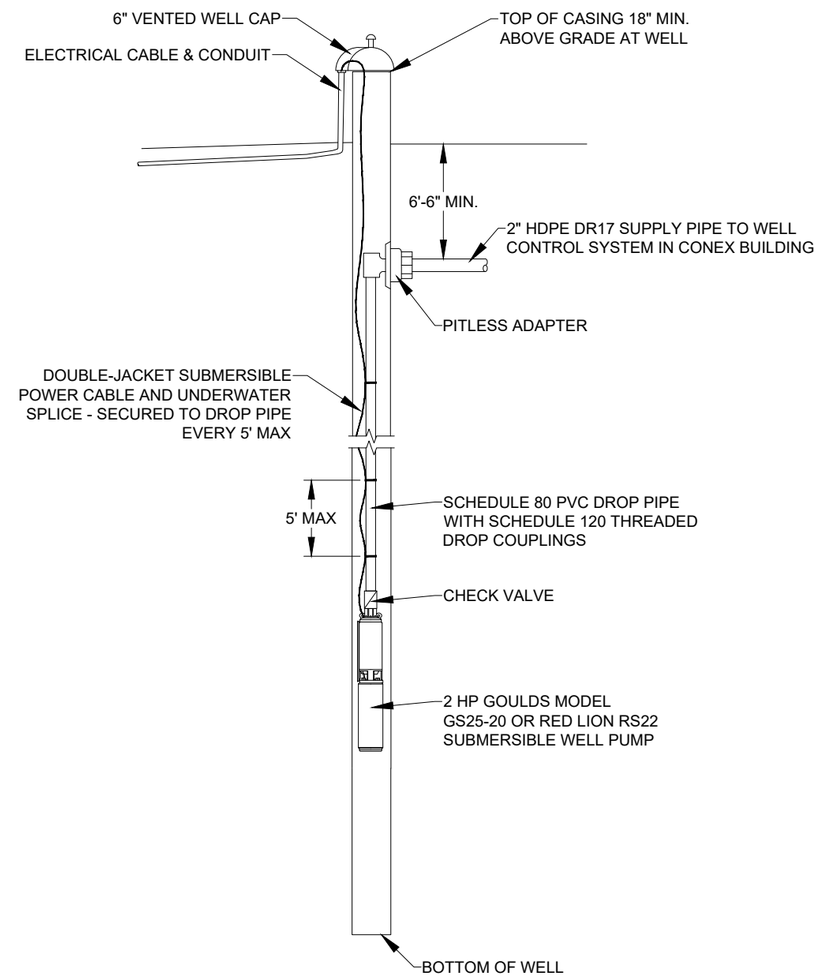

New Well Plumbing Detail (2 / CD-12)
NO SCALE

GENERAL WELL NOTES:

- CONSTRUCT WELL IN ACCORDANCE WITH THE WELL DRILLER'S REGULATIONS, ARM 36 CHAPTER 21
- ALL DIMENSIONS AND PIPE LENGTHS ARE TO BE ESTABLISHED IN THE FIELD AFTER WELL IS DRILLED AND LITHOLOGY IS KNOWN.
- PUMP POWER CABLE SHALL BE THWN OR THHN INSULATED AND ATTACHED TO PUMP DROP PIPE AT NO GREATER THAN 10-FOOT INTERVALS.

Revision	Date	By
30% Draft	8/1/24	AE
60% Draft	11/18/24	AE
90% Draft	1/31/25	AE
Final	2/14/25	AE

Revision: Final
Plot Scale: 1:2
Drawn By: A.Eckhart, P.E.
Approved By: P.Montgomery, P.E.
Checked By: A.Eckhart, P.E.
Designed By: P.Montgomery, P.E.

Engineer
Anderson~Montgomery CONSULTING ENGINEERS
1064 N. Warren
Helena, MT 59601
Phone (406) 449-3303

Owner: City Of Missoula

Project Title: Garden City Compost Facility Improvements

Sheet Title: **Irrigation Well Details**

Sheet: **CD-12**

X:\MISSOULA COMPOST\DESIGN\DRAWINGS\Sheets\5 - Civil Details\CD-12 Irrigation Well Details.dwg SAVED: 2/7/25 PRINTED: 2/11/25 BY: ADAM

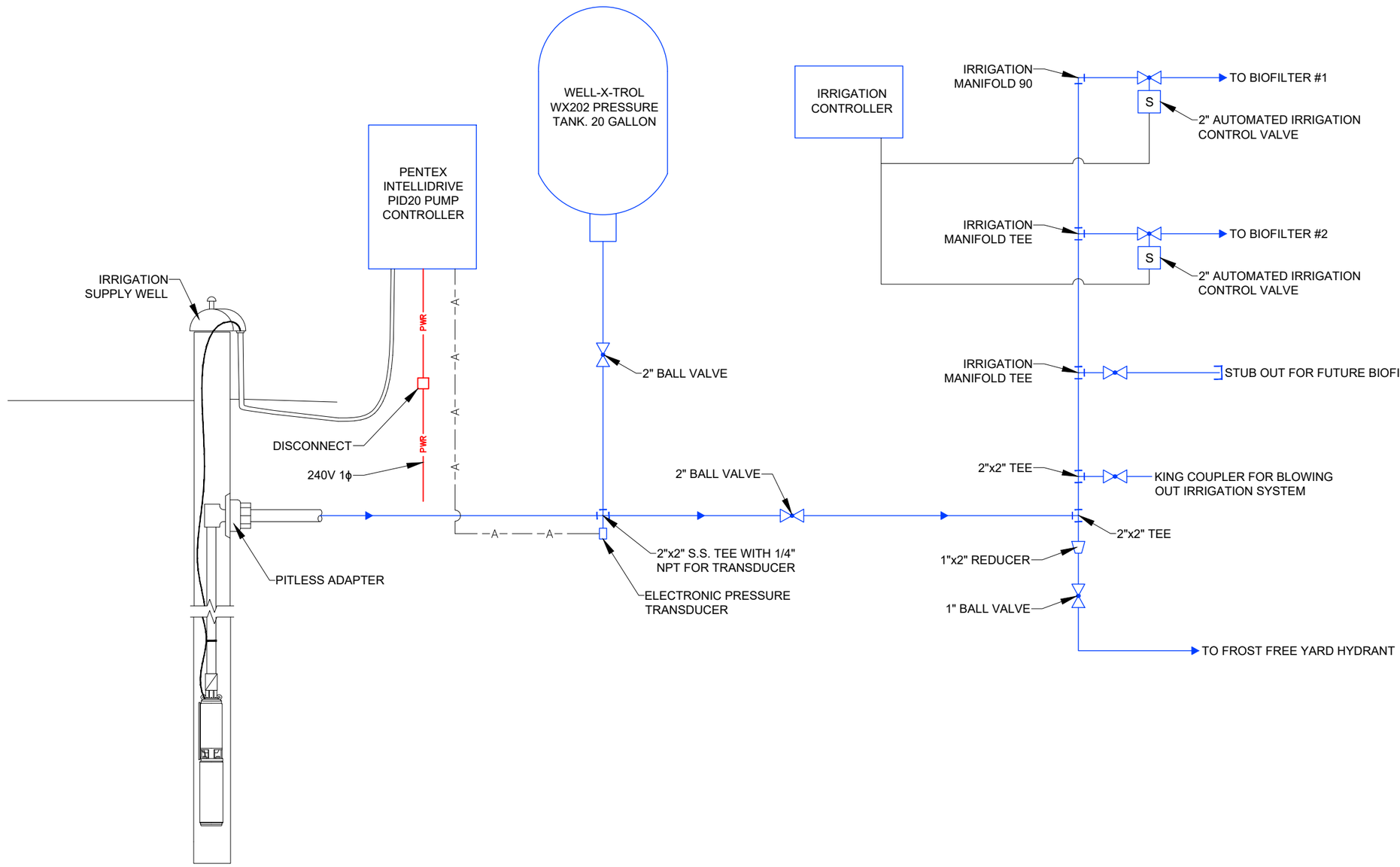

Irrigation Plumbing Diagram

1
C-9

NO SCALE

Revision	Date	By
30% Draft	8/1/24	AE
60% Draft	11/18/24	AE
90% Draft	1/31/25	AE
Final	2/14/25	AE

Revision: Final
Plot Scale: 1:2
Drawn By: A.Eckhart, P.E.
Approved By: P.Montgomery, P.E.
Checked By: A.Eckhart, P.E.
Designed By: P.Montgomery, P.E.

Engineer:
Anderson~Montgomery
CONSULTING ENGINEERS
1064 N. Warren
Helena, MT 59601
Phone (406) 449-3303

Owner: City Of Missoula

Project Title: Garden City Compost Facility Improvements

Sheet Title: **Irrigation Plumbing Diagram**

Sheet: **CD-13**

X:\MISSOULA COMPOST\DESIGN\DRAWINGS\Sheets\5 - Civil Details\CD-13 Irrigation Plumbing Diagram.dwg SAVED: 2/7/25 PRINTED: 2/11/25 BY: ADAM

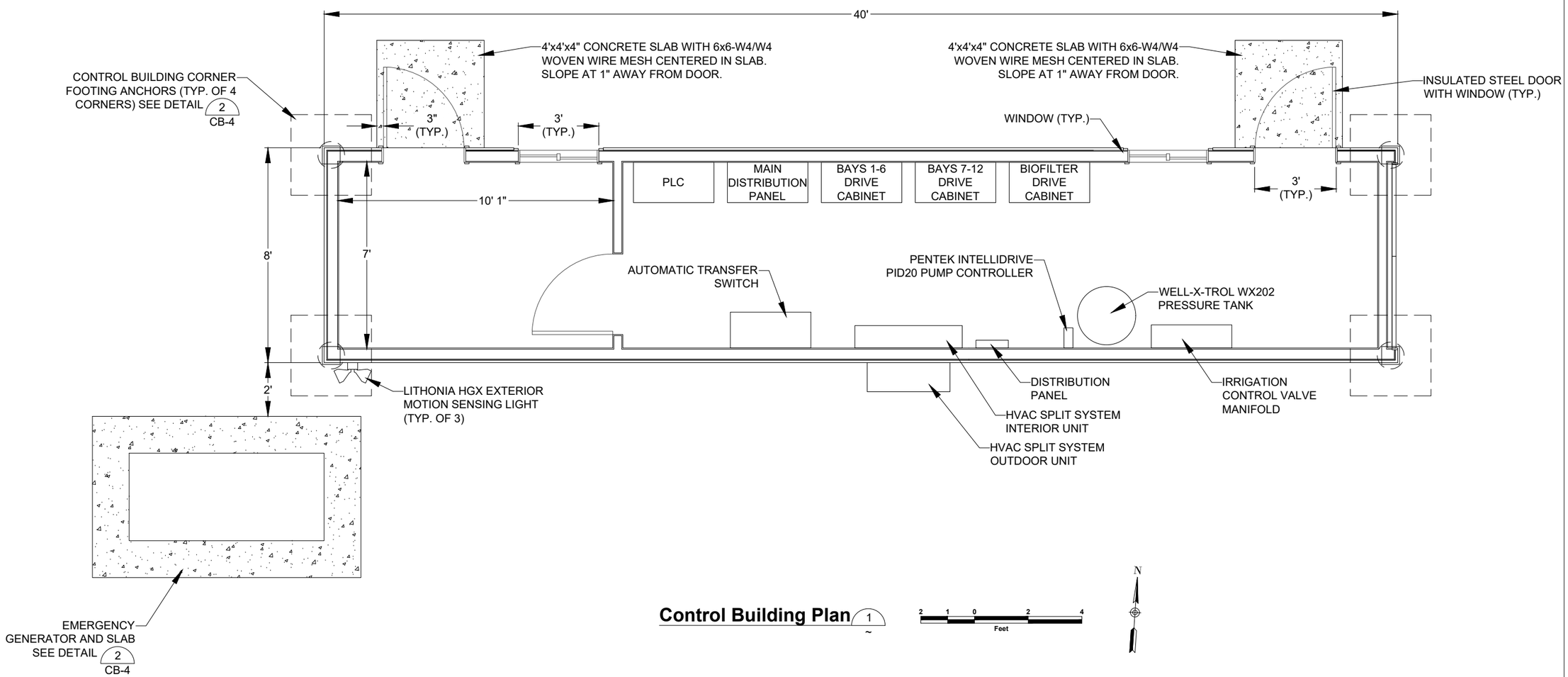

Control Building Plan 1

Revision	Date	By
30% Draft	8/1/24	AE
60% Draft	11/18/24	AE
90% Draft	1/31/25	AE
Final	2/14/25	AE

Revision: Final

Plot Scale: 1:2

Drawn By: A.Eckhart, P.E.

Approved By: P.Montgomery, P.E.

Checked By: A.Eckhart, P.E.

Designed By: P.Montgomery, P.E.

Engineer

Anderson~Montgomery CONSULTING ENGINEERS

1064 N. Warren
Helena, MT 59601
Phone (406) 449-3303

Owner

City Of Missoula

Project Title

Garden City Compost Facility Improvements

Sheet Title

Control Building Plan

Sheet

CB-1

X:\MISSOULA COMPOST\DESIGN\DRAWINGS\Sheets\6 – Control Building\CB-1 Control Building Plan.dwg SAVED: 2/3/25 PRINTED: 2/11/25 BY: ADAM

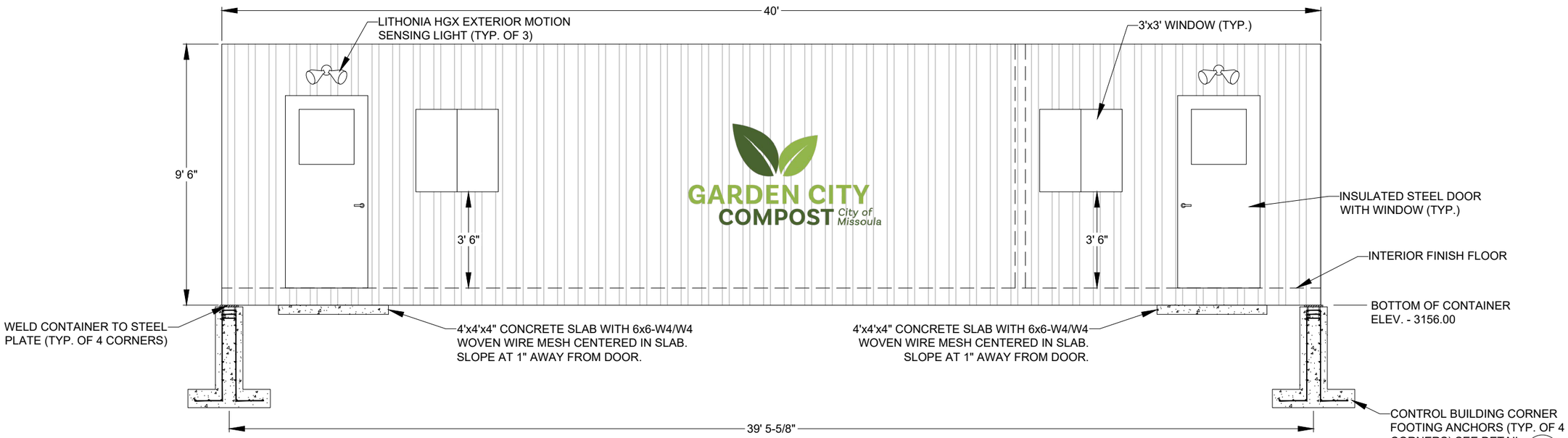

Control Building North Elevation

2 1 0 2 4
Feet

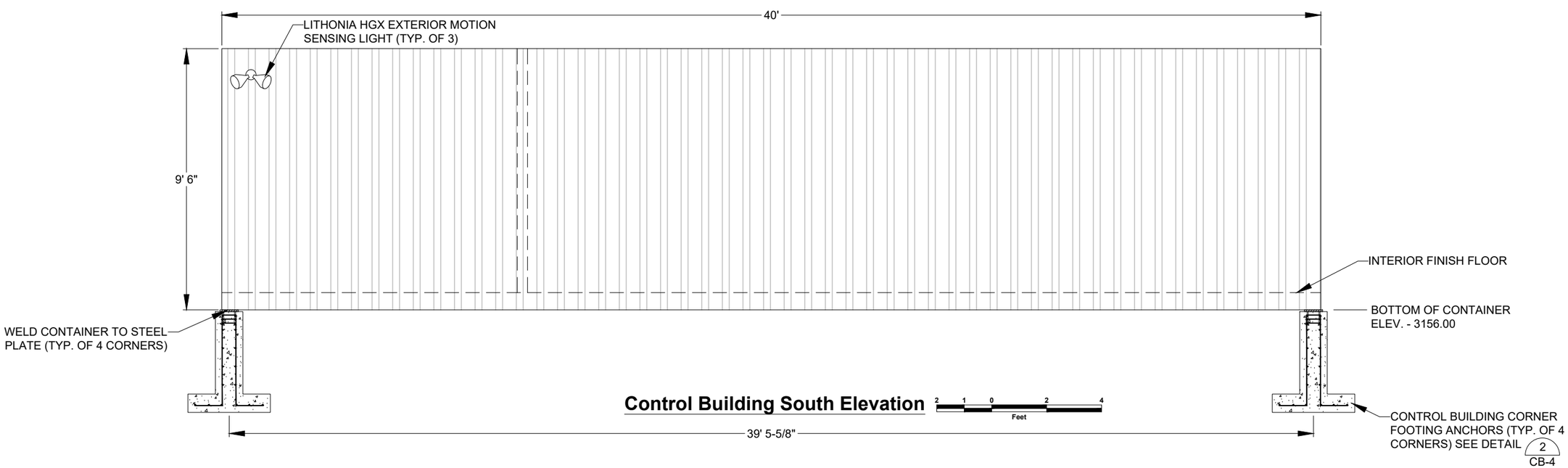

Control Building South Elevation

2 1 0 2 4
Feet

Revision	Date	By
30% Draft	8/1/24	AE
60% Draft	11/18/24	AE
90% Draft	1/31/25	AE
Final	2/14/25	AE

Revision: Final
Plot Scale: 1:2
Drawn By: A.Eckhart, P.E.
Approved By: P.Montgomery, P.E.
Checked By: A.Eckhart, P.E.
Designed By: P.Montgomery, P.E.

Engineer
Anderson~Montgomery CONSULTING ENGINEERS
1064 N. Warren
Helena, MT 59601
Phone (406) 449-3303

Owner
City Of Missoula

Project Title
Garden City Compost Facility Improvements

Sheet Title
Control Building North & South Elevations

Sheet
CB-2

X:\MISSOULA COMPOST\DESIGN\DRAWINGS\Sheets\6 – Control Building\CB-1 Control Building Plan.dwg SAVED: 2/3/25 PRINTED: 2/11/25 BY: ADAM

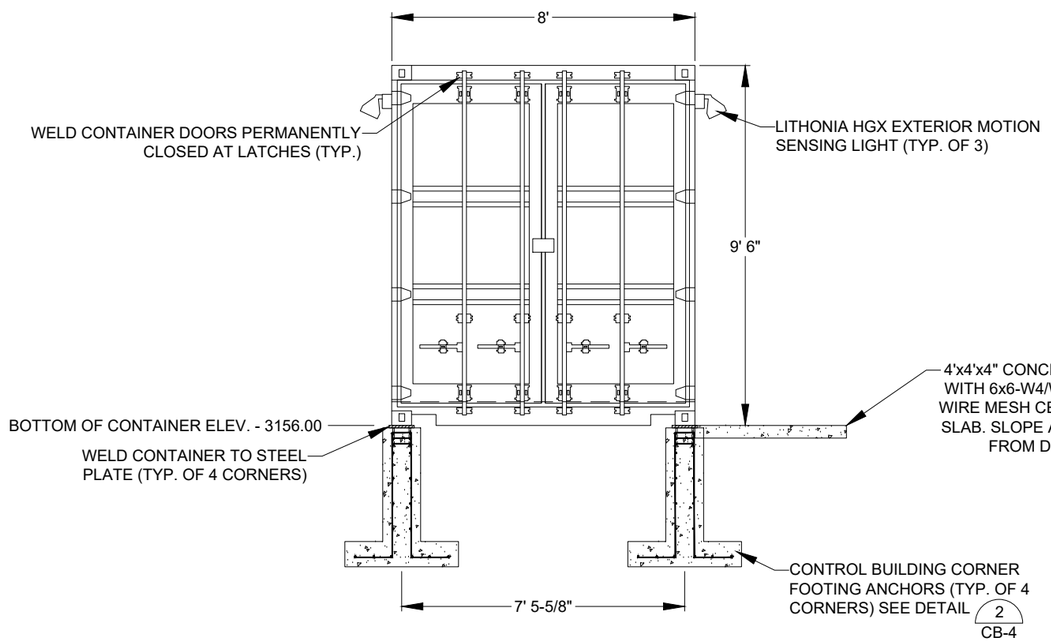

Control Building East Elevation

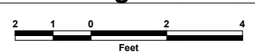

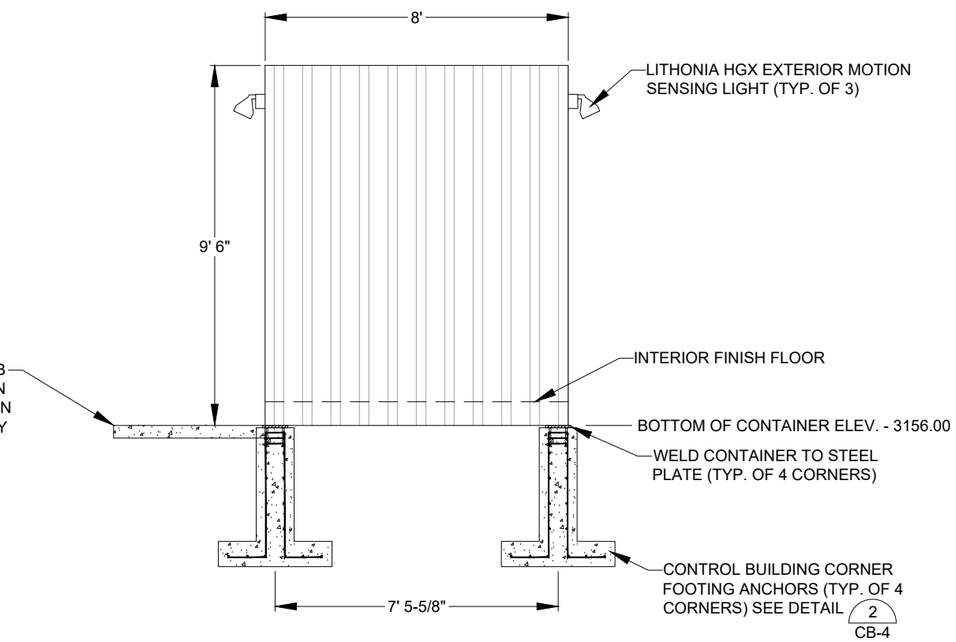

Control Building West Elevation

Revision	Date	By
30% Draft	8/1/24	AE
60% Draft	11/18/24	AE
90% Draft	1/31/25	AE
Final	2/14/25	AE

Revision: Final
Plot Scale: 1:2
Drawn By: A.Eckhart, P.E.
Approved By: P.Montgomery, P.E.
Checked By: A.Eckhart, P.E.
Designed By: P.Montgomery, P.E.

Engineer

Anderson~Montgomery
CONSULTING ENGINEERS
1064 N. Warren
Helena, MT 59601
Phone (406) 449-3303

Owner: City Of Missoula

Project Title: Garden City Compost Facility Improvements

Sheet Title: **Control Building East & West Elevations**

Sheet: **CB-3**

X:\MISSOULA COMPOST\DESIGN\DRAWINGS\Sheets\6 – Control Building\CB-1 Control Building Plan.dwg SAVED: 2/3/25 PRINTED: 2/11/25 BY: ADAM

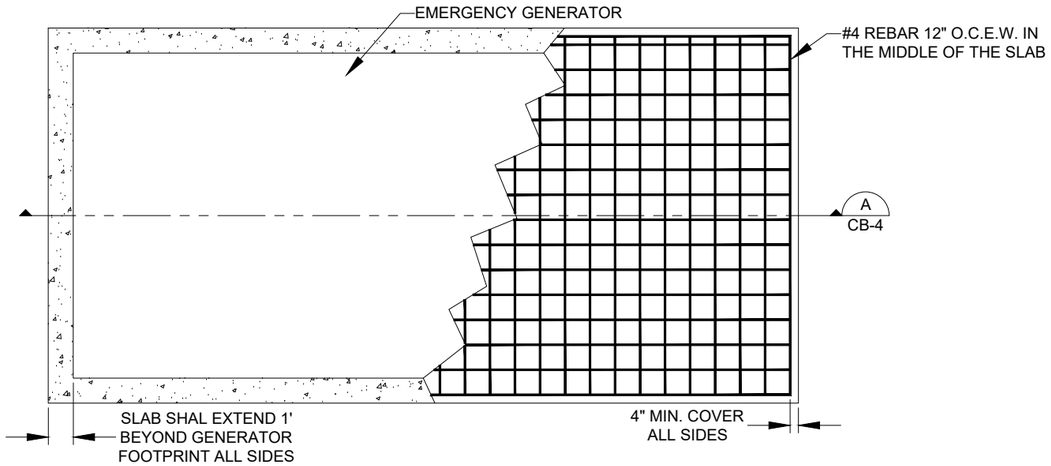

Emergency Generator Slab (1 / CB-1)

NO SCALE

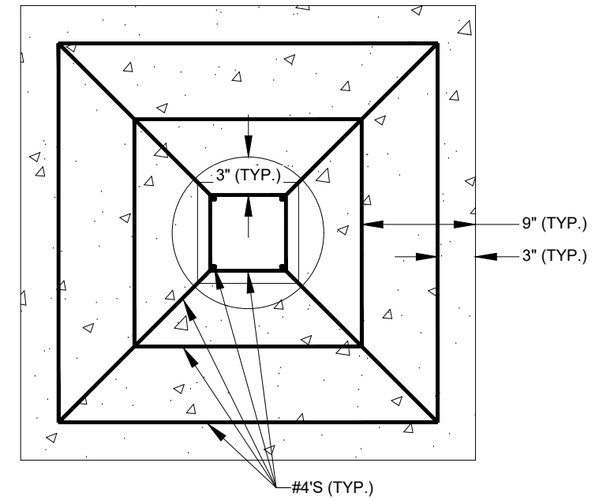

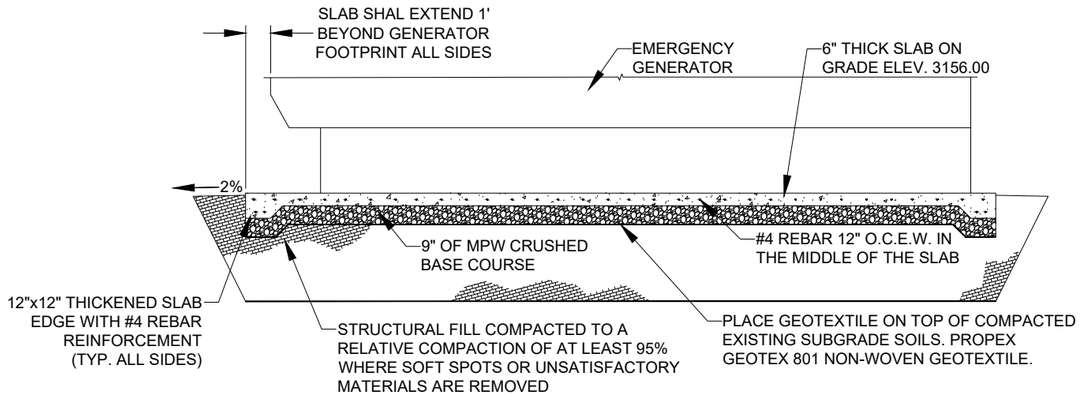

Emergency Generator Slab Section (A / CB-4)

NO SCALE

NOTES:

- EXCAVATE AND REMOVE UNSUITABLE MATERIAL BENEATH SLAB FOOTPRINT AND REPLACE WITH COMPACTED MPW 4" MINUS (SECTION 02234 PART 2.4.A). PROVIDE ENGINEER AN OPPORTUNITY TO INSPECT THE BOTTOM OF THE EXCAVATION. EXCAVATE SOFT SPOTS OR UNSATISFACTORY MATERIALS THAT ARE OBSERVED. MOISTURE CONDITION SUBGRADE SOILS TO PLUS OR MINUS 2% OF OPTIMUM MOISTURE CONTENT. COMPACT THE SUBGRADE SOILS TO A STANDARD RELATIVE COMPACTION (ASTM D698) OF AT LEAST 98%. COMPACTED EXCAVATION SURFACE SHOULD BE PROOF-ROLLED WITH HEAVY EQUIPMENT. REPLACE REMOVED SOFT SPOTS/UNSATISFACTORY MATERIAL WITH STRUCTURAL FILL IN 8" MAXIMUM LOOSE LIFTS TO DESIGN GRADE AND COMPACT TO A STANDARD RELATIVE COMPACTION OF AT LEAST 98%. STRUCTURAL FILL SHALL MEET MPW 4-INCH MINUS SUB-BASE COURSE.
- GRADE AWAY FROM SLAB AT A MINIMUM OF 2% FOR 10 FEET.
- SEE ELECTRICAL DESIGN FOR GENERATOR SIZE
- MOUNT GENERATOR TO CONCRETE SLAB PER MANUFACTURER'S RECOMMENDATIONS.

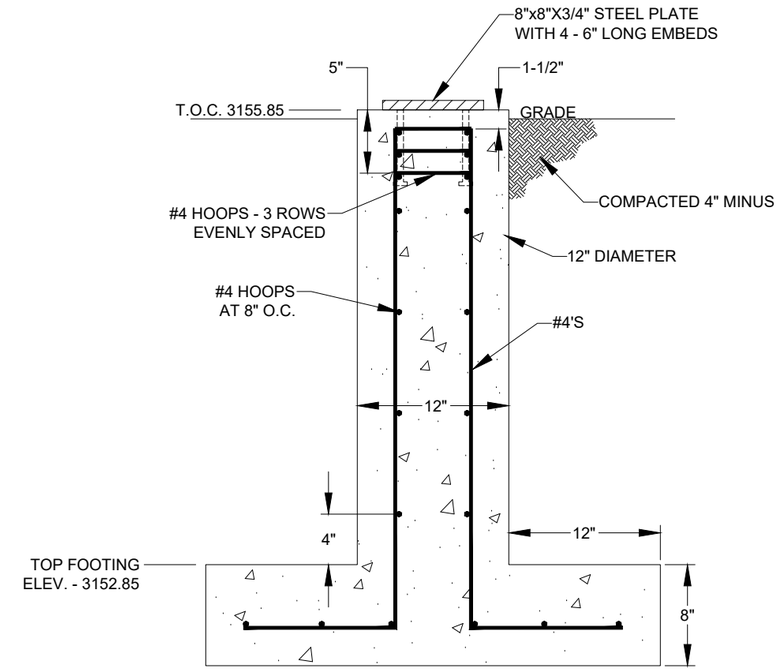

Control Building Corner Footing Anchors (2 / ~)

NO SCALE

Revision	Date	By
30% Draft	8/1/24	AE
60% Draft	11/18/24	AE
90% Draft	1/31/25	AE
Final	2/14/25	AE

Revision: Final
Plot Scale: 1:2
Drawn By: A.Eckhart, P.E.
Approved By: P.Montgomery, P.E.
Checked By: A.Eckhart, P.E.
Designed By: P.Montgomery, P.E.

Engineer

Anderson~Montgomery CONSULTING ENGINEERS
1064 N. Warren
Helena, MT 59601
Phone (406) 449-3303

Owner: City Of Missoula

Project Title: Garden City Compost Facility Improvements

Sheet Title: **Control Building & Emergency Generator Subgrade**

Sheet: **CB-4**

X:\MISSOULA COMPOST\DESIGN\DRAWINGS\Sheets\6 – Control Building\CB-1 Control Building Plan.dwg SAVED: 2/3/25 PRINTED: 2/11/25 BY: ADAM

NOTE:
THREE WIRELESS TEMPERATURE PROBES ARE TO BE INSTALLED INTO EACH BAY AFTER PLACEMENT OF THE COMPOST MIX. NO INSTALLATION OR PERMANENT HARDWARE IS REQUIRED.

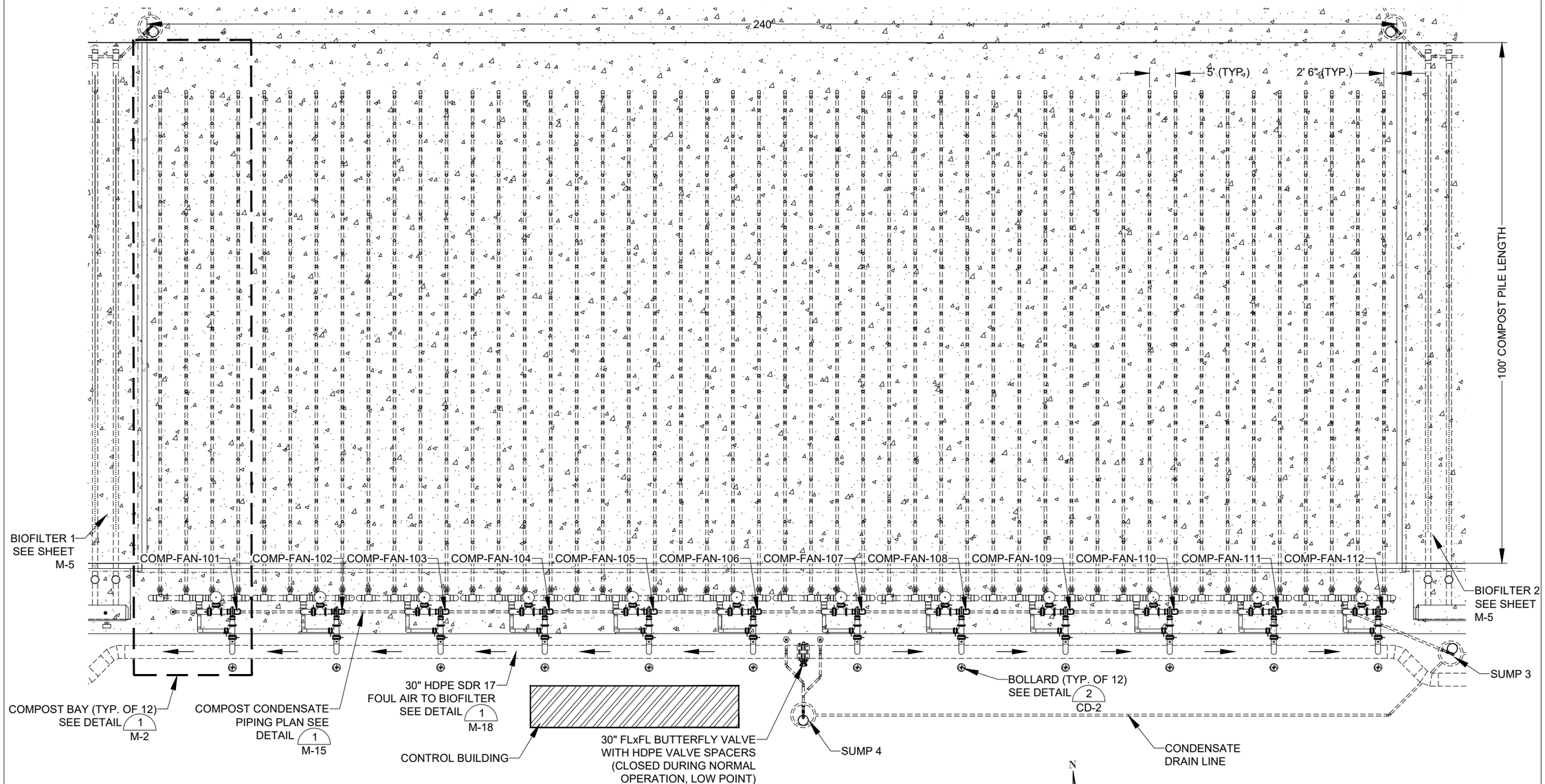

Compost Bays Piping Plan

NOTE:
CONTRACTOR SHALL INSTALL HDPE VALVE SPACERS FOR THE BURIED BUTTERFLY VALVE. CONTRACTOR SHALL VERIFY VALVE OPERATES PROPERLY WITHOUT INTERFERENCE BEFORE BACKFILLING.

MONTANA
John R. Godak
NO. 17132PE
2/12/25
LICENSED
PROFESSIONAL ENGINEER

Revision	Date	By
30% Draft	8/1/24	AE
60% Draft	11/18/24	AE
90% Draft	1/31/25	AE
Final	2/14/25	AE

Revision: Final
Plot Scale: 1:2
Drawn By: A.Eckhart, P.E.
Approved By: P.Montgomery, P.E.
Checked By: A.Eckhart, P.E.
Checked By: T.Williams, P.E.
Designed By: P.Montgomery, P.E.
Designed By: T.Pipher, P.E.

Engineer
Anderson~Montgomery
CONSULTING ENGINEERS
1064 N. Warren
Helena, MT 59601
Phone (406) 449-3303

Jacobs
999 Main Street
STE. 1200
Boise, ID 83702
Phone (406) 212-4520

Owner: City Of Missoula

Project Title: Garden City Compost Facility Improvements

Sheet Title: **Compost Bays Piping**

Sheet: **M-1**

X:\MISSOULA COMPOST\DESIGN\DRAWINGS\Sheets\7 - Mechanical\M-1 Compost Bays Piping.dwg SAVED: 2/12/25 PRINTED: 2/14/25 BY: ADAM

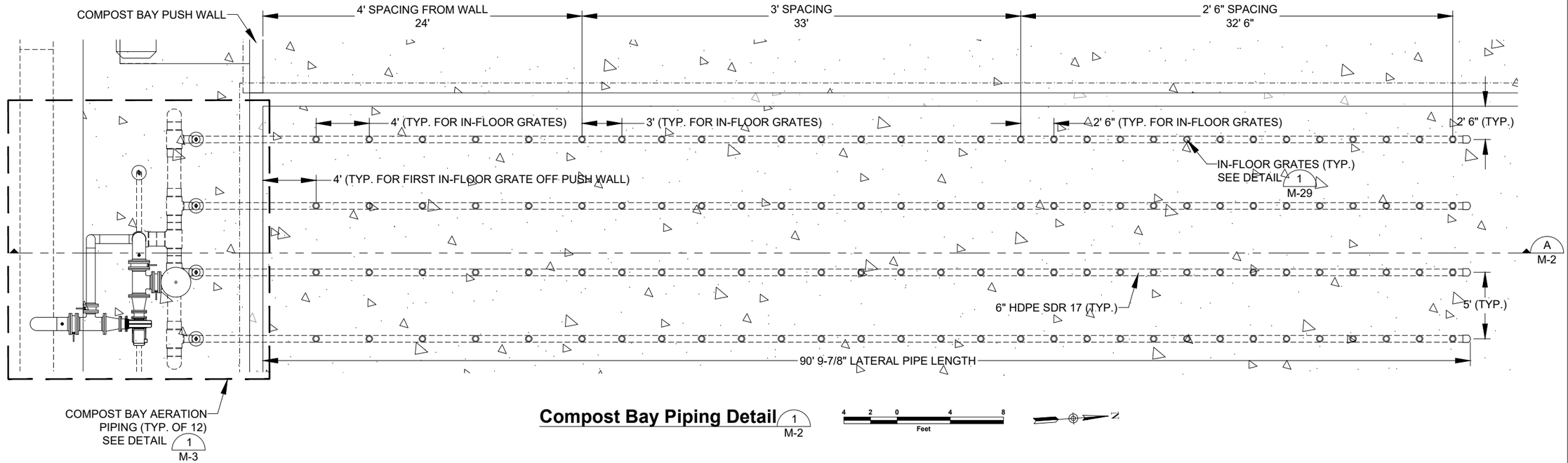

Compost Bay Piping Detail 1 / M-2

4 2 0 4 8
Feet

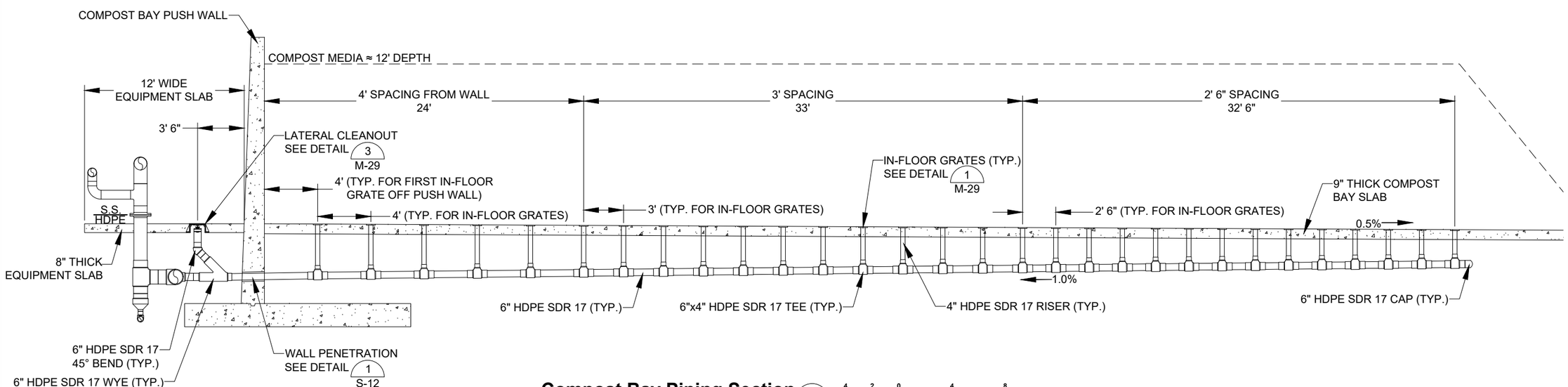

Compost Bay Piping Section A / M-2

4 2 0 4 8
Feet

NOTES:

- SEE SHEETS M-3 AND M-4 FOR BLOWER AND AEARTION PIPING GALLERY
- COMPOST PILE LENGTH - 100'

Revision	Date	By
30% Draft	8/1/24	AE
60% Draft	11/18/24	AE
90% Draft	1/31/25	AE
Final	2/14/25	AE

Revision: Final
Plot Scale: 1:2
Drawn By: A.Eckhart, P.E.
Approved By: P.Montgomery, P.E.
Checked By: A.Eckhart, P.E.
Checked By: T.Williams, P.E.
Designed By: P.Montgomery, P.E.
Designed By: T.Pipher, P.E.

Engineer
Anderson~Montgomery CONSULTING ENGINEERS
1064 N. Warren
Helena, MT 59601
Phone (406) 449-3303

Jacobs
999 Main Street
STE. 1200
Boise, ID 83702
Phone (406) 212-4520

Owner: City Of Missoula

Project Title: Garden City Compost Facility Improvements

Sheet Title: **Compost Bay Piping Details**

Sheet: **M-2**

X:\MISSOULA COMPOST\DESIGN\DRAWINGS\Sheets\7 – Mechanical\M-2 Compost Bay Detail.dwg SAVED: 2/6/25 PRINTED: 2/11/25 BY: ADAM

CALLOUTS:

① - COMP-FAN-X: 5 HP BLOWER (CINCINNATI PB-15A4 CW BH OR PRE-APPROVED EQUAL)
② - 8"x12" S.S. 12 GAUGE DUCT
③ - 12"x12"x8" S.S. 12 GAUGE DUCT TEE
④ - FLxS.S. ADAPTER (TYP. ALL TRANSITIONS FROM S.S. TO FLANGE FITTINGS)
⑤ - 12" FLxFL DAMPER (GREENHECK HCDR-351 OR EQUAL)
⑥ - 8" FLxFL DAMPER (GREENHECK HCDR-351 OR EQUAL)
⑦ - 12" S.S. 12 GAUGE DUCT FIELD FIT
⑧ - 8" S.S. 12 GAUGE DUCT FIELD FIT
⑨ - 12" S.S. 12 GAUGE DUCT 90° BEND
⑩ - 8" S.S. 12 GAUGE DUCT SHORT RADIUS 90° BEND
⑪ - 30" HDPE SDR 17
⑫ - 12" S.S. 12 GAUGE DUCT TEE
⑬ - 12" S.S. TO 12" HDPE SDR 17 ADAPTER
⑭ - 12" HDPE SDR 17 FIELD FIT
⑮ - 12" HDPE SDR 17 BUTT FUSE TEE
⑯ - 12"x12"x6" HDPE SDR 17 BUTT FUSE TEE
⑰ - 12" HDPE SDR 17 BUTT FUSE CAP
⑱ - 6" HDPE SDR 17 BUTT FUSE WYE
⑲ - 6" HDPE SDR 17 45° BEND
⑳ - 6" HDPE SDR 17 PIPE FIELD FIT
㉑ - 6" WING NUT PIPE PLUG (TYP.)
㉒ - CLEANOUT FRAME (TYP.)
㉓ - FOUL AIR TEST PORT SEE DETAIL 4/M-29
㉔ - 12"x4" HDPE SDR 17 BUTT FUSE REDUCER
㉕ - 4" HDPE SDR 17 BUTT FUSE TEE (TYP.)
㉖ - 4" HDPE SDR 17 BUTT FUSE 45° BEND (TYP.)
㉗ - 4" HDPE SDR 17 CONDENSATE PIPING
㉘ - 12" ENDUSTRA INTAKE FILTER WITH S.S. MEDIA OR APPROVED EQUAL
㉙ - 12" S.S. 12 GAUGE DUCT SHORT RADIUS 90° BEND
㉚ - 4" WING NUT PIPE PLUG
㉛ - HOLZ FLEXIBLE JOINT STYLE 942 OR EQUAL
㉜ - PIPE BOLLARD SEE DETAIL 2/CD-2

NOTE:

- CONDENSATE PIPING ELEVATION VARIES SEE COMPOST CONDENSATE DRAWINGS FOR DETAILS. SHEETS M-15 THROUGH M-16.
- ALL FLANGE ADAPTERS SHALL UTILIZE AN IRON FLANGE.
- ALL PIPES PASSING THROUGH A CONCRETE SLAB SHALL UTILIZE A SLEEVE, SEE CIVIL DETAILS.

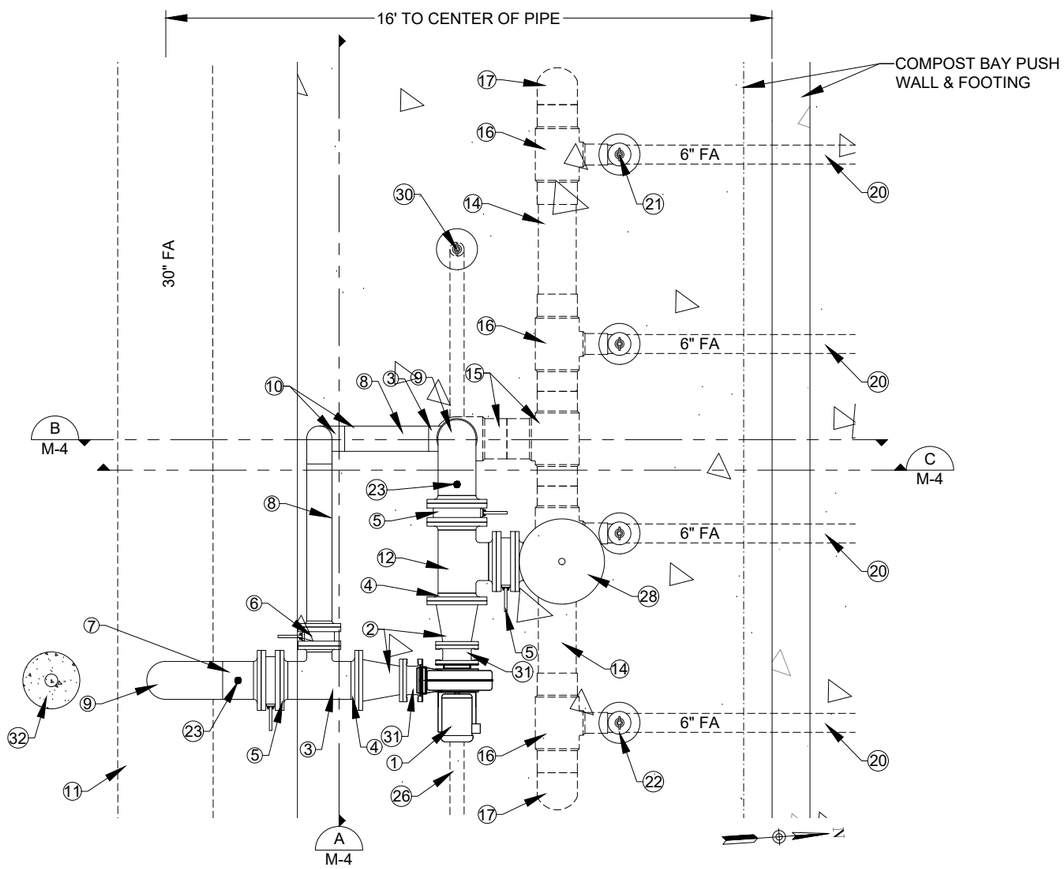

Compost Bay Aeration Piping Detail 1/M-2

2 1 0 2 4
Feet

MONTANA John R. Gedak No. 72132PE 2/12/25 LICENSED PROFESSIONAL ENGINEER

Revision	Date	By
30% Draft	8/1/24	AE
60% Draft	11/18/24	AE
90% Draft	1/31/25	AE
Final	2/14/25	AE

Revision: Final
Plot Scale: 1:2
Drawn By: A.Eckhart, P.E.
Approved By: P.Montgomery, P.E.
Checked By: A.Eckhart, P.E.
Checked By: T.Williams, P.E.
Designed By: P.Montgomery, P.E.
Designed By: T.Pipher, P.E.

Engineer
Anderson~Montgomery CONSULTING ENGINEERS
1064 N. Warren
Helena, MT 59601
Phone (406) 449-3303

Jacobs
999 Main Street
STE. 1200
Boise, ID 83702
Phone (406) 212-4520

Owner: City Of Missoula

Project Title: Garden City Compost Facility Improvements

Sheet Title: **Compost Bay Aeration Piping Details**

Sheet: **M-3**

X:\MISSOULA COMPOST\DESIGN\DRAWINGS\Sheets\7 - Mechanical\M-3 Compost Bay Aeration Piping Details.dwg SAVED: 2/11/25 PRINTED: 2/14/25 BY: ADAM

CALLOUTS:

① - COMP-FAN-X: 5 HP BLOWER (CINCINNATI PB-15A4 CW BH OR PRE-APPROVED EQUAL)
② - 8"x12" S.S. 12 GAUGE DUCT
③ - 12"x12"x8" S.S. 12 GAUGE DUCT TEE
④ - FLxS.S. ADAPTER (TYP. ALL TRANSITIONS FROM S.S. TO FLANGE FITTINGS)
⑤ - 12" FLxFL DAMPER (GREENHECK HCDR-351 OR EQUAL)
⑥ - 8" FLxFL DAMPER (GREENHECK HCDR-351 OR EQUAL)
⑦ - 12" S.S. 12 GAUGE DUCT FIELD FIT
⑧ - 8" S.S. 12 GAUGE DUCT FIELD FIT
⑨ - 12" S.S. 12 GAUGE DUCT 90° BEND
⑩ - 8" S.S. 12 GAUGE DUCT SHORT RADIUS 90° BEND
⑪ - 30" HDPE SDR 17
⑫ - 12" S.S. 12 GAUGE DUCT TEE
⑬ - 12" S.S. TO 12" HDPE SDR 17 ADAPTER
⑭ - 12" HDPE SDR 17 FIELD FIT
⑮ - 12" HDPE SDR 17 BUTT FUSE TEE
⑯ - 12"x12"x6" HDPE SDR 17 BUTT FUSE TEE
⑰ - 12" HDPE SDR 17 BUTT FUSE CAP
⑱ - 6" HDPE SDR 17 BUTT FUSE WYE
⑲ - 6" HDPE SDR 17 45° BEND
⑳ - 6" HDPE SDR 17 PIPE FIELD FIT
㉑ - 6" WING NUT PIPE PLUG (TYP.)
㉒ - CLEANOUT FRAME (TYP.)
㉓ - FOUL AIR TEST PORT SEE DETAIL 4/M-29
㉔ - 12"x4" HDPE SDR 17 BUTT FUSE REDUCER
㉕ - 4" HDPE SDR 17 BUTT FUSE TEE (TYP.)
㉖ - 4" HDPE SDR 17 BUTT FUSE 45° BEND (TYP.)
㉗ - 4" HDPE SDR 17 CONDENSATE PIPING
㉘ - 12" ENDUSTRA INTAKE FILTER WITH S.S. MEDIA OR APPROVED EQUAL
㉙ - 12" S.S. 12 GAUGE DUCT SHORT RADIUS 90° BEND
㉚ - 4" WING NUT PIPE PLUG
㉛ - HOLZ FLEXIBLE JOINT STYLE 942 OR EQUAL
㉜ - PIPE BOLLARD SEE DETAIL 2/CD-2

NOTE:

- CONDENSATE PIPING ELEVATION VARIES SEE COMPOST CONDENSATE DRAWINGS FOR DETAILS. SHEETS M-15 THROUGH M-16.
- ALL FLANGE ADAPTERS SHALL UTILIZE AN IRON FLANGE.
- ALL PIPES PASSING THROUGH A CONCRETE SLAB SHALL UTILIZE A SLEEVE, SEE CIVIL DETAILS.
- PIPE SUPPORTS NOT SHOWN FOR DRAWING CLARITY. CONTRACTOR SHALL RECOMMEND SUPPORT LOCATIONS TO BE APPROVED BY ENGINEER.

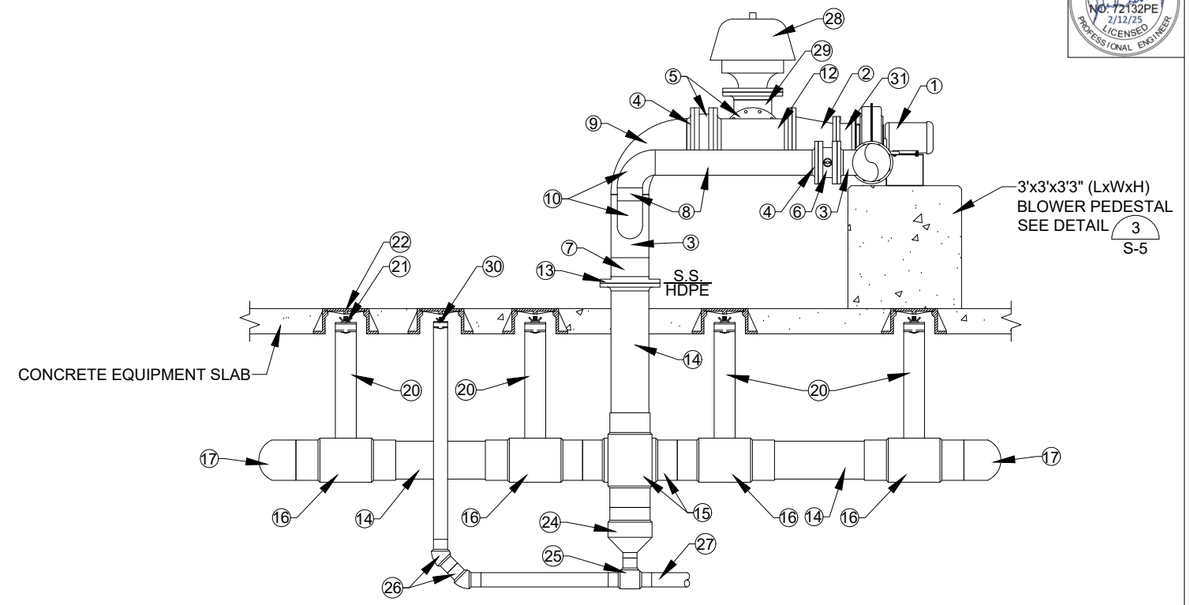

Compost Bay Aeration Piping Section A/M-3

2 1 0 2 4 Feet

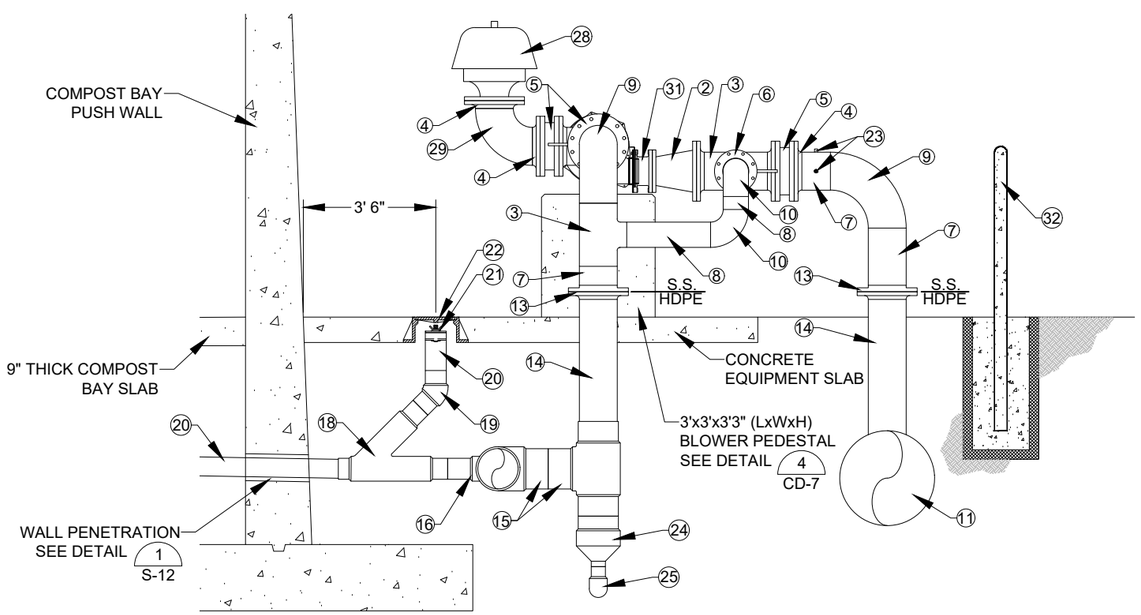

Compost Bay Aeration Piping Section B/M-3

2 1 0 2 4 Feet

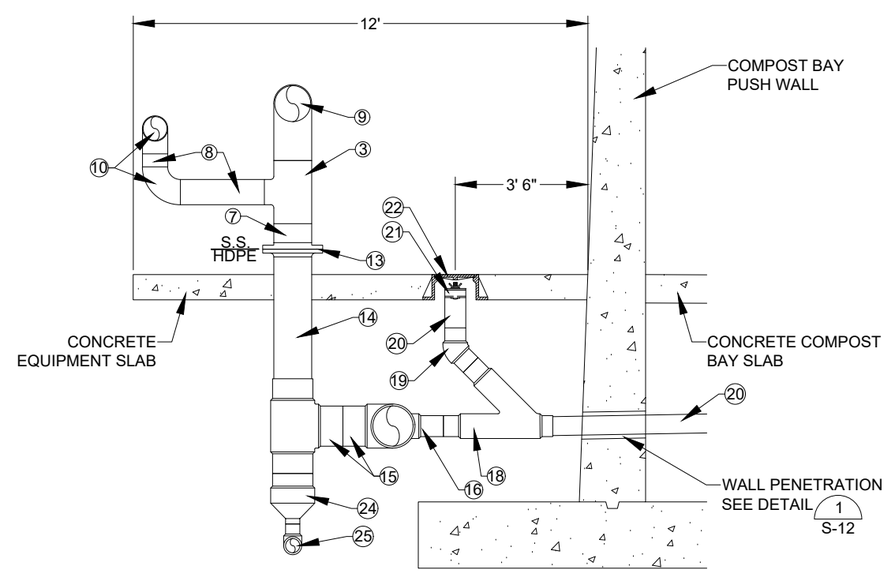

Compost Bay Aeration Piping Section C/M-3

2 1 0 2 4 Feet

MONTANA John R. Gedak NO. 12132PE 2/12/25 LICENSED PROFESSIONAL ENGINEER

Revision	Date	By
30% Draft	8/1/24	AE
60% Draft	11/18/24	AE
90% Draft	1/31/25	AE
Final	2/14/25	AE

Revision: Final
Plot Scale: 1:2
Drawn By: A.Eckhart, P.E.
Approved By: P.Montgomery, P.E.
Checked By: A.Eckhart, P.E.
Checked By: T.Williams, P.E.
Designed By: P.Montgomery, P.E.
Designed By: T.Pipher, P.E.

Engineer: Anderson~Montgomery CONSULTING ENGINEERS, 1064 N. Warren, Helena, MT 59601, Phone (406) 449-3303

Jacobs, 999 Main Street, STE. 1200, Boise, ID 83702, Phone (406) 212-4520

Owner: City Of Missoula

Project Title: Garden City Compost Facility Improvements

Sheet Title: **Compost Bay Aeration Piping Sections**

Sheet: **M-4**

X:\MISSOULA COMPOST\DESIGN\DRAWINGS\Sheets\7 – Mechanical\M-4 Compost Bay Aeration Sections.dwg SAVED: 2/11/25 PRINTED: 2/14/25 BY: ADAM

INSTRUMENT LEGEND:

1 - PRESSURE TRANSMITTER PIT-101/102 SEE DETAILS 1 M-30 2 M-30

2 - TEMPERATURE TRANSMITTER TIT-113/114 SEE DETAIL 4 M-30

3 - TEMPERATURE ELEMENT TE-113/114 SEE DETAIL 3 M-30

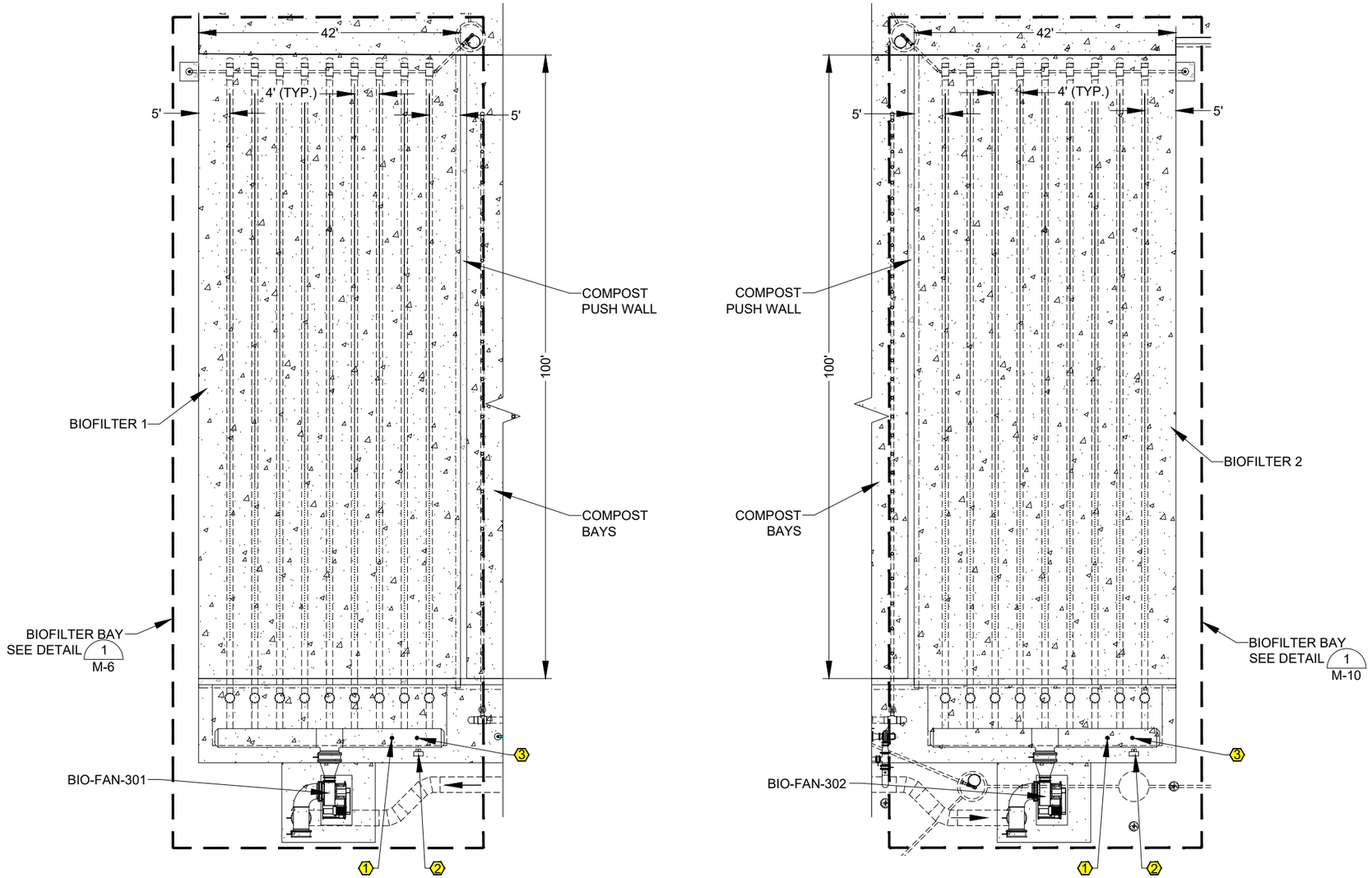

Biofilter Bays Piping Plan

10 5 0 10 20
Feet

N

MONTANA John R. Gedak NO. 72132PE 2/12/25 LICENSED PROFESSIONAL ENGINEER

Revision	Date	By
30% Draft	8/1/24	AE
60% Draft	11/18/24	AE
90% Draft	1/31/25	AE
Final	2/14/25	AE

Revision: Final
Plot Scale: 1:2
Drawn By: A.Eckhart, P.E.
Approved By: P.Montgomery, P.E.
Checked By: A.Eckhart, P.E.
Checked By: T.Williams, P.E.
Designed By: P.Montgomery, P.E.
Designed By: T.Pipher, P.E.

Engineer
Anderson~Montgomery CONSULTING ENGINEERS
1064 N. Warren
Helena, MT 59601
Phone (406) 449-3303

Jacobs
999 Main Street
STE. 1200
Boise, ID 83702
Phone (406) 212-4520

Owner
City Of Missoula

Project Title
Garden City Compost Facility Improvements

Sheet Title
Biofilter Bays Piping

Sheet
M-5

X:\MISSOULA COMPOST\DESIGN\DRAWINGS\Sheets\7 - Mechanical\M-5 Biofilter Bays Piping.dwg SAVED: 2/12/25 PRINTED: 2/14/25 BY: ADAM

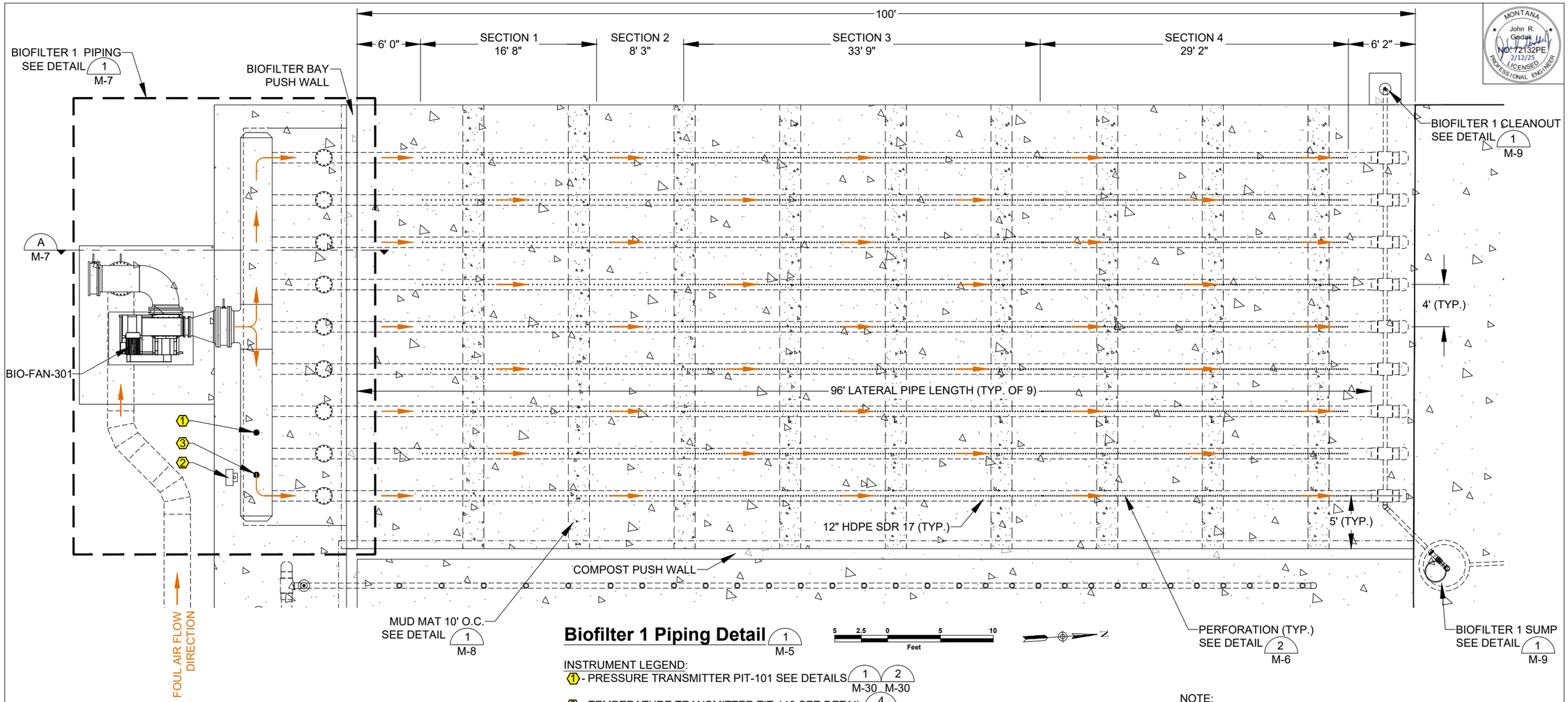

Biofilter 1 Piping Detail 1 M-5

INSTRUMENT LEGEND:

1 - PRESSURE TRANSMITTER PIT-101 SEE DETAILS 1 M-30 2 M-30

2 - TEMPERATURE TRANSMITTER TIT-113 SEE DETAIL 4 M-30

3 - TEMPERATURE ELEMENT TE-113 SEE DETAIL 3 M-30

NOTE:
FOR BIOFILTER IRRIGATION LAYOUT SEE SHEET M-23

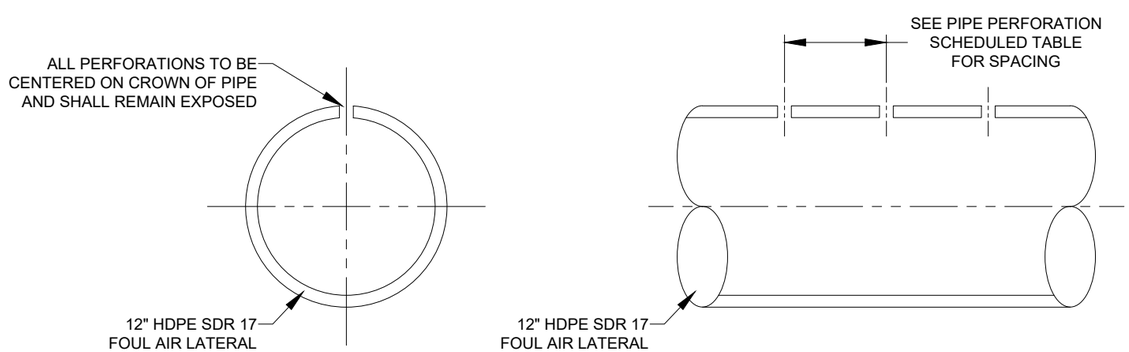

Biofilter Pipe Perforation Detail 2 M-6

NO SCALE

PIPE PERFORATION SCHEDULE			
SECTION	NUMBER OF PIPE PERFORATIONS	CL TO CL DIMENSION	PERFORATION SIZE
1	40	5"	7/8"
2	22	4-1/2"	7/8"
3	135	3"	7/8"
4	140	2-1/2"	7/8"

NOTE:
DRILL PIPE PERFORATION AFTER CONCRETE CURING IS COMPLETE

MONTANA John R. Godak NO. 72132PE 2/12/25 LICENSED PROFESSIONAL ENGINEER

Revision	Date	By
30% Draft	8/1/24	AE
60% Draft	11/18/24	AE
90% Draft	1/31/25	AE
Final	2/14/25	AE

Revision: Final
Plot Scale: 1:2
Drawn By: A.Eckhart, P.E.
Approved By: P.Montgomery, P.E.
Checked By: A.Eckhart, P.E.
Checked By: T.Williams, P.E.
Designed By: P.Montgomery, P.E.
Designed By: T.Pipher, P.E.

Engineer
Anderson~Montgomery CONSULTING ENGINEERS
1064 N. Warren
Helena, MT 59601
Phone (406) 449-3303

Jacobs
999 Main Street
STE. 1200
Boise, ID 83702
Phone (406) 212-4520

Owner: City Of Missoula

Project Title: Garden City Compost Facility Improvements

Sheet Title: **Biofilter 1 Piping Details**

Sheet: **M-6**

X:\MISSOULA COMPOST\DESIGN\DRAWINGS\Sheets\7 – Mechanical\M-6 Biofilter 1 Detail.dwg SAVED: 2/12/25 PRINTED: 2/14/25 BY: ADAM

CALLOUTS:

1. BIO-FAN-301: 50 HP BLOWER (NEW YORK BACKWARD INCLINED SWSI CLASS 4 SIZE 27 OR PRE-APPROVED EQUAL)
2. 30" HDPE SDR 17 PIPE SPOOL
3. 30" HDPE SDR 17 BUTT FUSE 3 SEGMENT 45° BEND
4. 30" HDPE SDR 17 BUTT FUSE 3 SEGMENT 90° BEND
5. HDPE FLANGE (TYP.)
6. 30" FLxFL FLEXIBLE CONNECTION
7. FLxS.S. ADAPTER (TYP. ALL TRANSITIONS FROM S.S. TO FLANGE FITTINGS)
8. 30" S.S. 12 GAUGE DUCT TEE
9. 30" FLxFL GREENHECK HCDR-351 DAMPER
10. 30" S.S. 12 GAUGE DUCT 90° BEND
11. S.S 12 GAUGE DUCT RECTANGULAR TO 36" ROUND TRANSITION
12. 36" FLxFL GREENHECK HCDR-351 DAMPER
13. 36" S.S. 12 GAUGE DUCT TEE
14. 36" S.S. 12 GAUGE DUCT FABRICATED HEADER WITH END CAPS AND 12" LATERAL CONNECTIONS
15. 12" S.S. 12 GAUGE DUCT LATERAL
16. 12" S.S. 12 GAUGE DUCT FIELD FIT
17. 12" S.S. TO 12" HDPE SDR 17 ADAPTER
18. 12" HDPE SDR 17 BUTT FUSE 90° BEND
19. 12" HDPE SDR 17 PIPE FIELD FIT
20. 12" HDPE SDR 17 BUTT FUSE TEE
21. 12" BLIND FLANGE
22. 12" HDPE SDR 17 BIOFILTER AERATION LATERAL - FOR PIPE ELEVATION WITH RESPECT TO CONCRETE SLAB SEE DETAIL 1 / M-8
23. HOLZ FLEXIBLE JOINT STYLE 942 OR EQUAL

NOTES:

- 30" & 36" STAINLESS STEEL DUCT NOT OFF THE SHELF ITEMS. TYPICALLY REQUIRES FABRICATION.
- BIOFILTER MEDIA PILE LENGTH - 100'
- ALL FLANGE ADAPTERS SHALL UTILIZE AN IRON FLANGE.
- FOR COMPOST CONDENSATE DRAIN SEE SHEET M-15.
- FOR FOUL AIR TO BIOFILTER CONDENSATE COLLECTION SEE SHEET M-18.
- ALL PIPES PASSING THROUGH A CONCRETE SLAB SHALL UTILIZE A SLEEVE, SEE CIVIL DETAILS.

INSTRUMENT LEGEND:

1. PRESSURE TRANSMITTER PIT-101 SEE DETAILS 1 / M-30 2 / M-30
2. TEMPERATURE TRANSMITTER TIT-113 SEE DETAIL 4 / M-30
3. TEMPERATURE ELEMENT TE-113 SEE DETAIL 3 / M-30

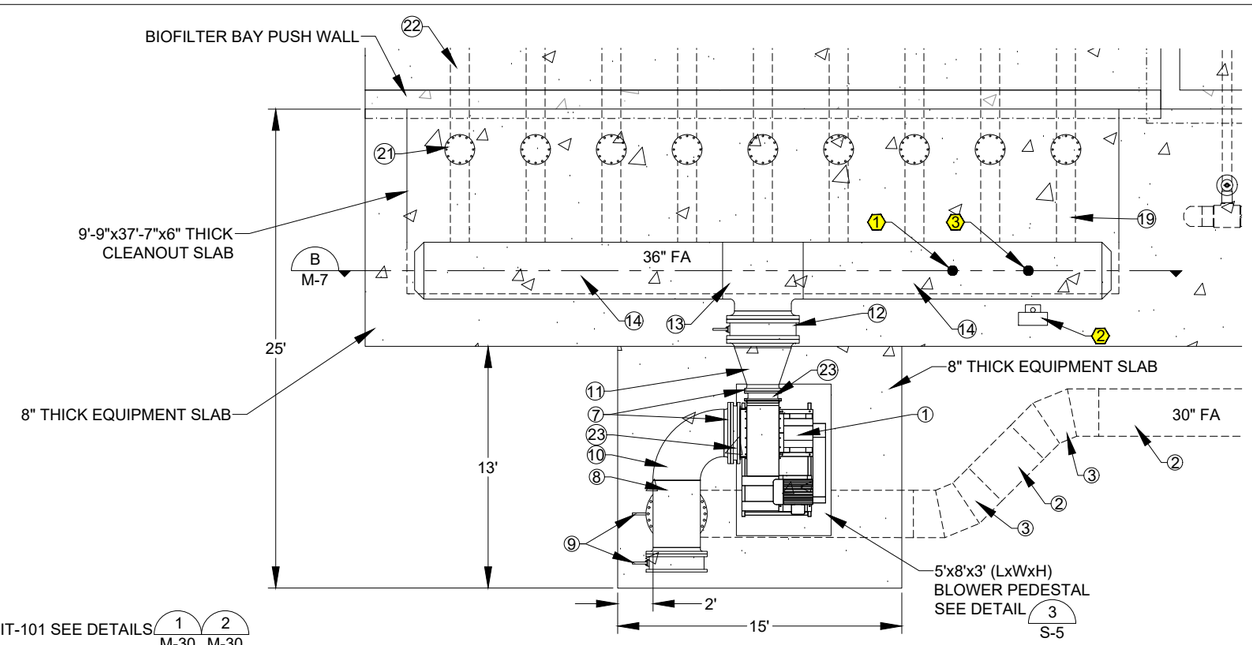

Biofilter 1 Piping Plan 1 / M-6

4 2 0 4 8 Feet

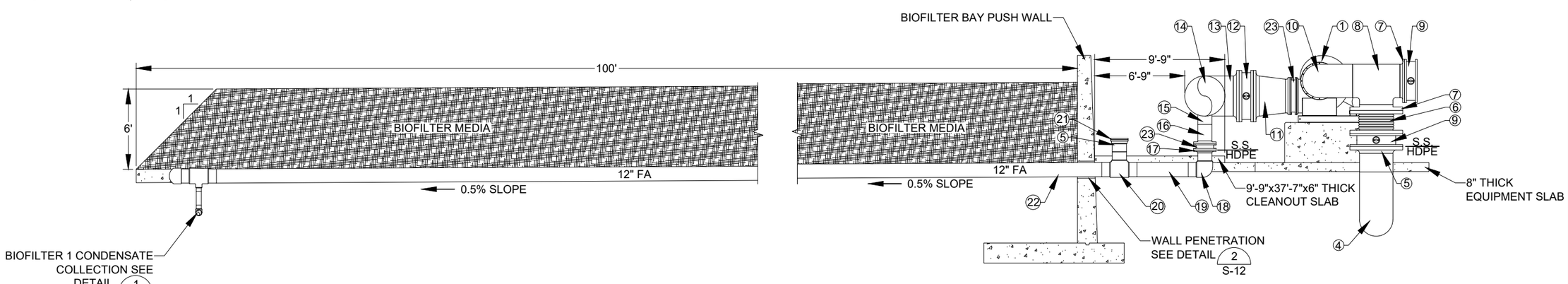

Biofilter 1 Piping Section A / M-6

4 2 0 4 8 Feet

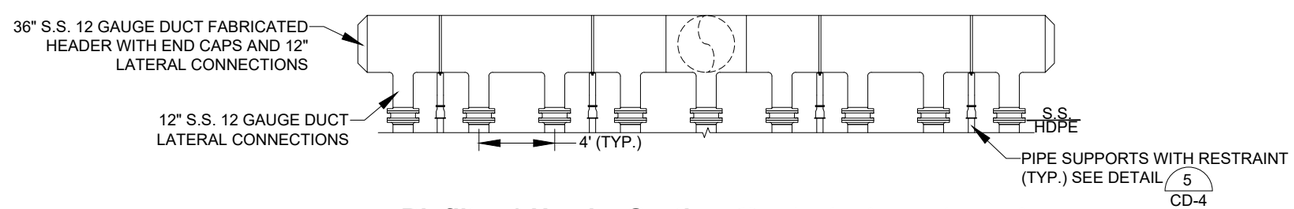

Biofilter 1 Header Section B / M-7

4 2 0 4 8 Feet

Revision	Date	By
30% Draft	8/1/24	AE
60% Draft	11/18/24	AE
90% Draft	1/31/25	AE
Final	2/14/25	AE

Revision: Final
Plot Scale: 1:2
Drawn By: A.Eckhart, P.E.
Approved By: P.Montgomery, P.E.
Checked By: A.Eckhart, P.E.
Checked By: T.Williams, P.E.
Designed By: P.Montgomery, P.E.
Designed By: T.Pipher, P.E.

Engineer
Anderson~Montgomery CONSULTING ENGINEERS
1064 N. Warren
Helena, MT 59601
Phone (406) 449-3303

Jacobs
999 Main Street
STE. 1200
Boise, ID 83702
Phone (406) 212-4520

Owner: City Of Missoula

Project Title: Garden City Compost Facility Improvements

Sheet Title: **Biofilter 1 Piping Details**

Sheet: **M-7**

X:\MISSOULA COMPOST\DESIGN\DRAWINGS\Sheets\7 - Mechanical\M-7 Biofilter 1 Piping Details.dwg SAVED: 2/12/25 PRINTED: 2/14/25 BY: ADAM

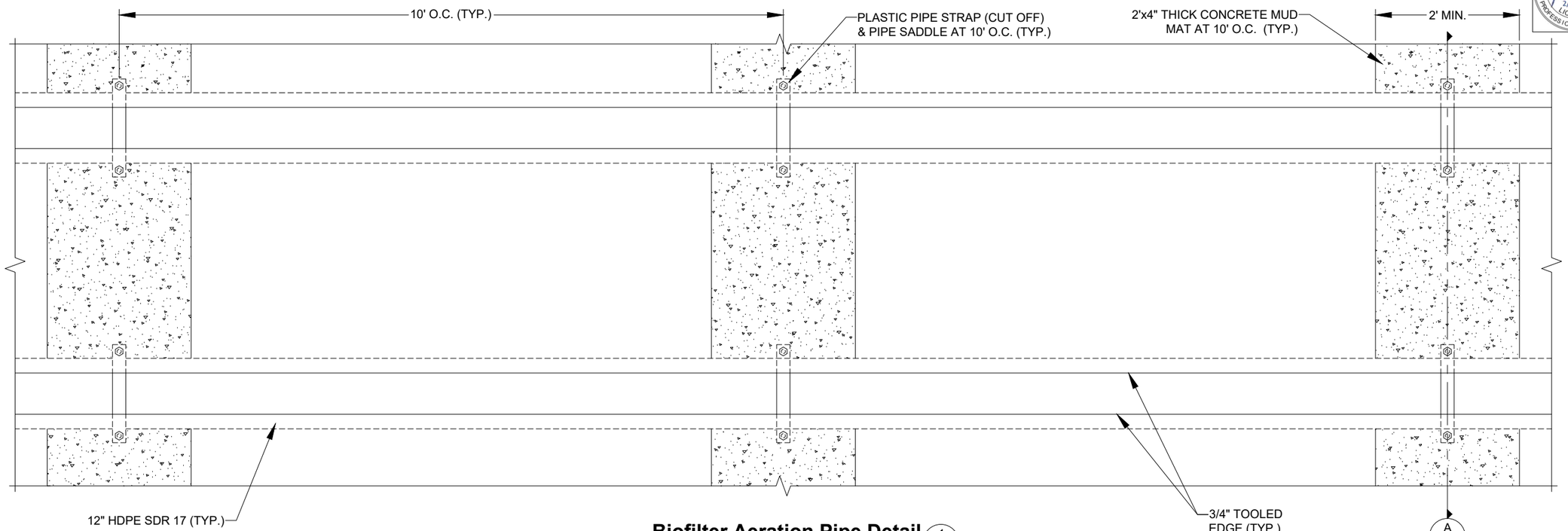

Biofilter Aeration Pipe Detail (1)

NO SCALE — M-6,M-10

NOTES:

- 12" THICK CONCRETE SLAB HATCHING AND REBAR REINFORCEMENT NOT SHOWN FOR DRAWING CLARITY, SEE SECTION BELOW.

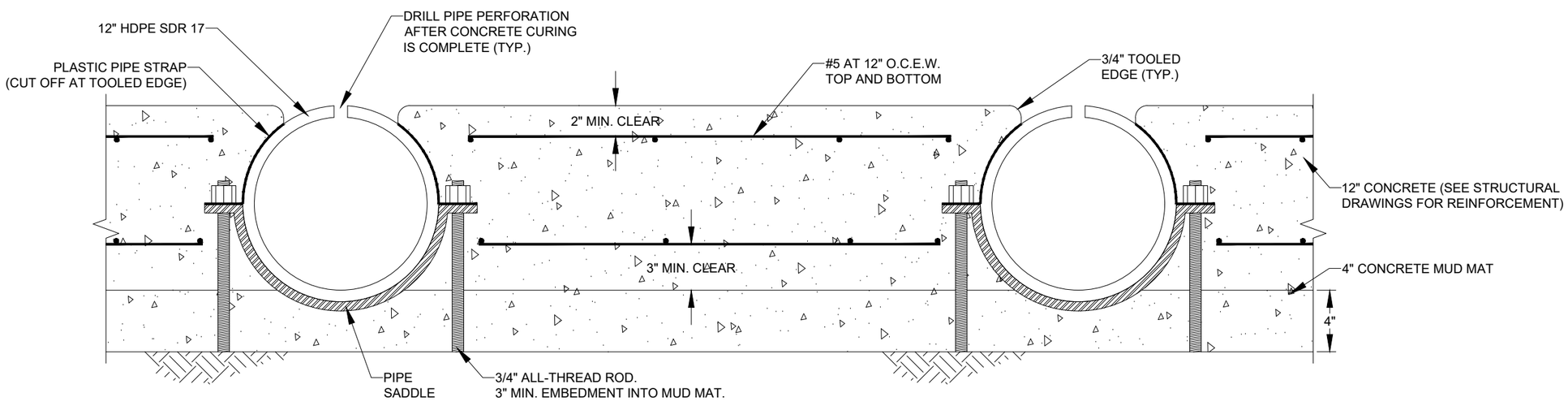

Biofilter Aeration Pipe Elevation Section (A)

NO SCALE — M-8

NOTES:

- MAX CONCRETE PLACEMENT = 60 LF.
- INSTALL PREFORMED EXPANSION JOINT BETWEEN ADJACENT POURS.
- PIPE SADDLES SHALL BE CENTERED IN MUD MAT SECTIONS EVERY 10'.

MONTANA John R. Godak NO. 72132PE 2/12/25 LICENSED PROFESSIONAL ENGINEER

Revision	Date	By
30% Draft	8/1/24	AE
60% Draft	11/18/24	AE
90% Draft	1/31/25	AE
Final	2/14/25	AE

Revision: Final
Plot Scale: 1:2
Drawn By: A.Eckhart, P.E.
Approved By: P.Montgomery, P.E.
Checked By: A.Eckhart, P.E.
Checked By: T.Williams, P.E.
Designed By: P.Montgomery, P.E.
Designed By: T.Pipher, P.E.

Engineer
Anderson~Montgomery CONSULTING ENGINEERS
1064 N. Warren
Helena, MT 59601
Phone (406) 449-3303

Jacobs
999 Main Street
STE. 1200
Boise, ID 83702
Phone (406) 212-4520

Owner: City Of Missoula

Project Title: Garden City Compost Facility Improvements

Sheet Title: **Biofilter Aeration Lateral Details**

Sheet: **M-8**

X:\MISSOULA COMPOST\DESIGN\DRAWINGS\Sheets\7 – Mechanical\M-8 Biofilter Aeration Lateral Details.dwg SAVED: 2/11/25 PRINTED: 2/14/25 BY: ADAM

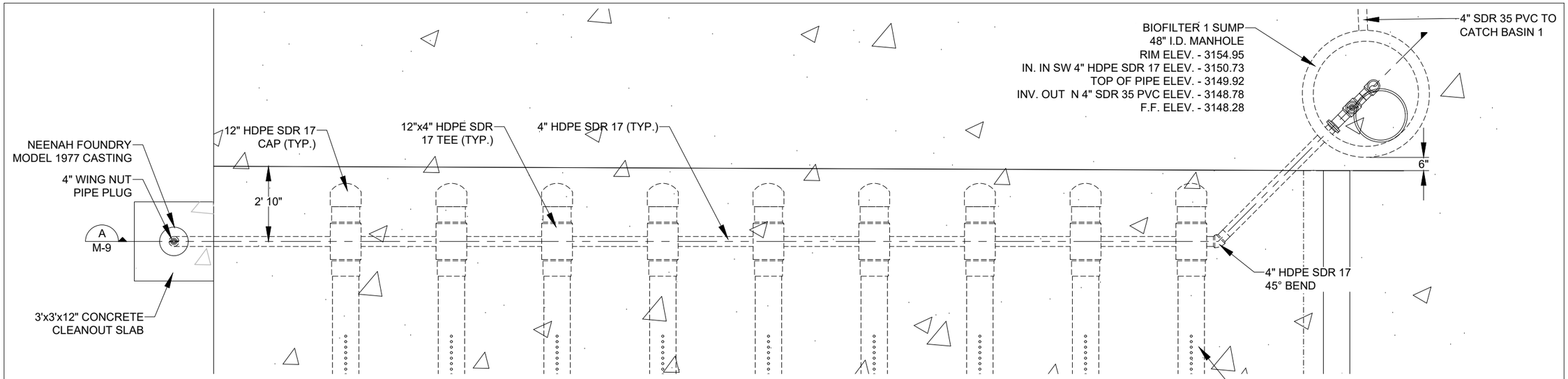

Biofilter 1 Piping Plan 1 / M-6

4 2 0 4 8 Feet

4" HDPE SDR 17 PIPE LENGTH SCHEDULE	
PIPE NUMBER	LENGTH OF VERTICAL PIPE*
1	1'-0"
2	1'-1"
3	1'-1 7/8"
4	1'-2 7/8"
5	1'-3 7/8"
6	1'-4 13/16"
7	1'-5 3/4"
8	1'-6 11/16"
9	1'-7 11/16"

*ROUNDED TO THE NEAREST 1/16 OF AN INCH

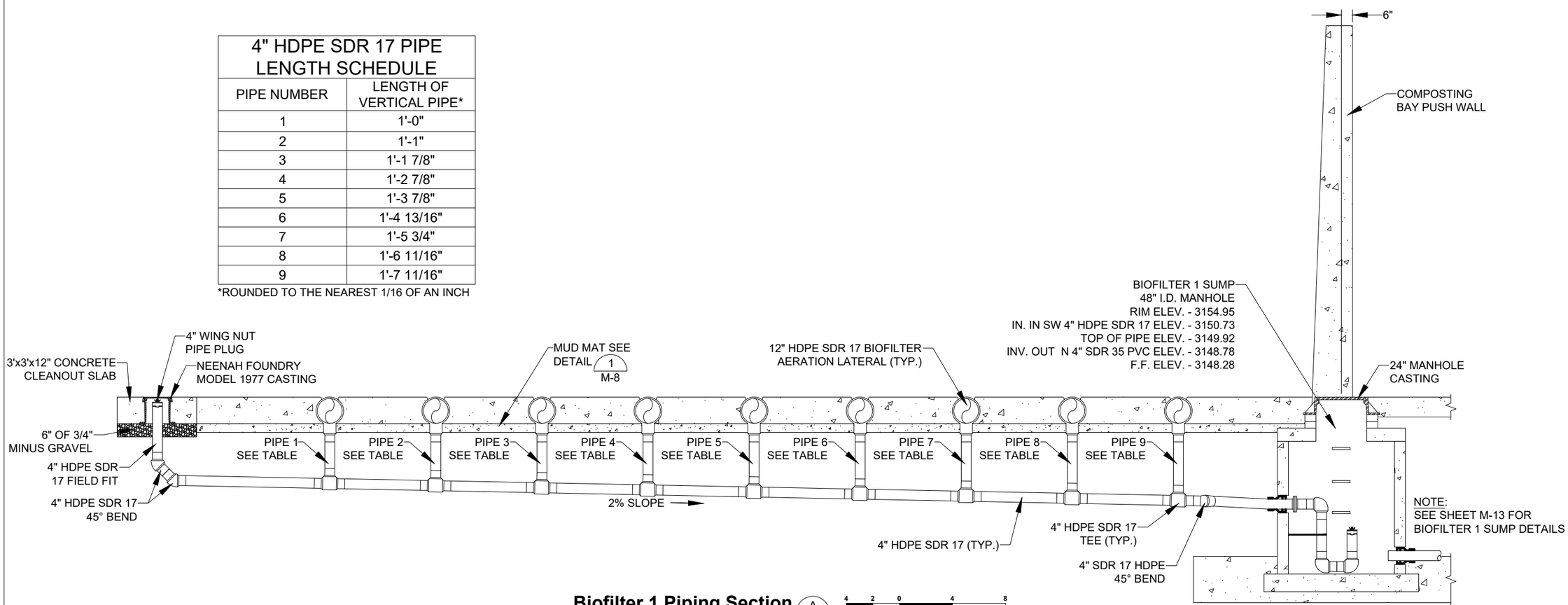

Biofilter 1 Piping Section A / M-9

4 2 0 4 8 Feet

Revision	Date	By
30% Draft	8/1/24	AE
60% Draft	11/18/24	AE
90% Draft	1/31/25	AE
Final	2/14/25	AE

Revision: Final
Plot Scale: 1:2
Drawn By: A.Eckhart, P.E.
Approved By: P.Montgomery, P.E.
Checked By: A.Eckhart, P.E.
Checked By: T.Williams, P.E.
Designed By: P.Montgomery, P.E.
Designed By: T.Pipher, P.E.

Engineer
Anderson~Montgomery CONSULTING ENGINEERS
1064 N. Warren
Helena, MT 59601
Phone (406) 449-3303

Jacobs
999 Main Street
STE. 1200
Boise, ID 83702
Phone (406) 212-4520

Owner: City Of Missoula

Project Title: Garden City Compost Facility Improvements

Sheet Title: **Biofilter 1 Condensate Collection Details**

Sheet: **M-9**

X:\MISSOULA COMPOST\DESIGN\DRAWINGS\Sheets\7 – Mechanical\M-9 Biofilter 1 Condensate Collection Details.dwg SAVED: 2/6/25 PRINTED: 2/11/25 BY: ADAM

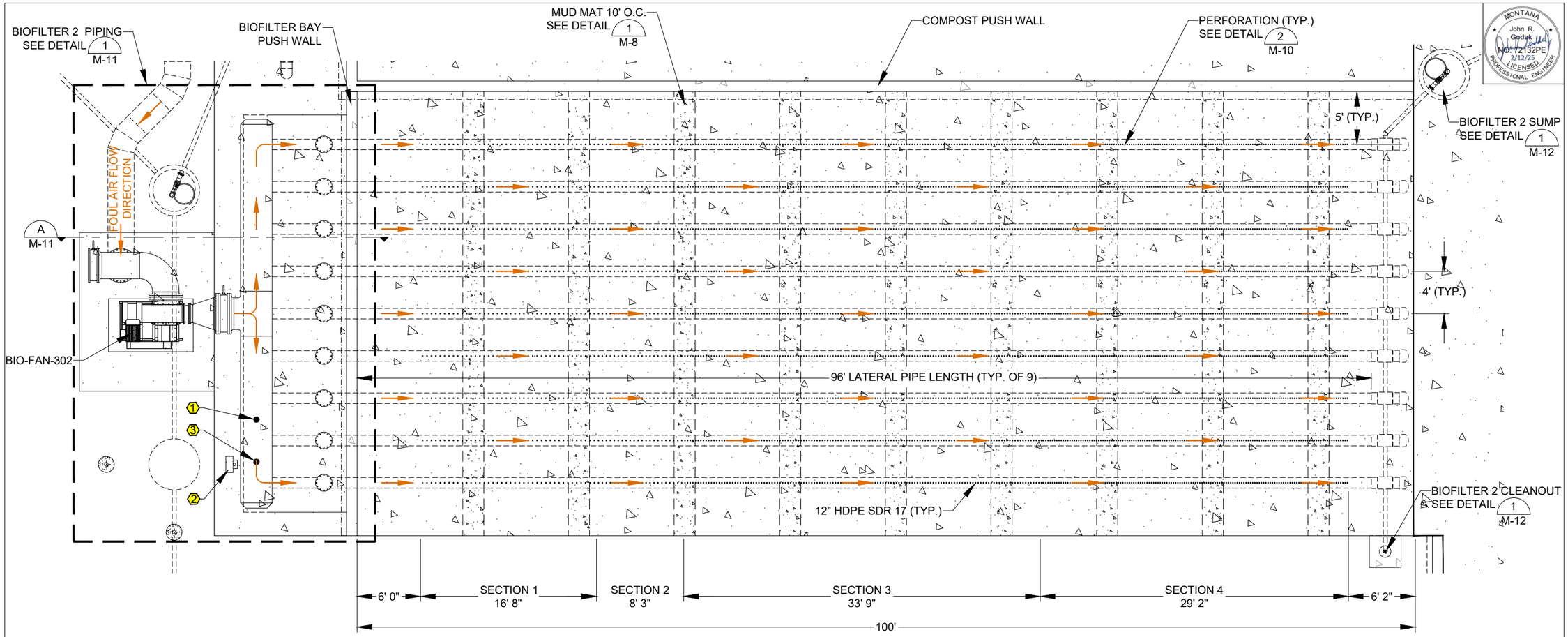

Biofilter 2 Piping Detail 1 M-5

5 2.5 0 5 10 Feet

NOTE:
FOR BIOFILTER IRRIGATION LAYOUT SEE SHEET M-23

INSTRUMENT LEGEND:

1 - PRESSURE TRANSMITTER PIT-102 SEE DETAILS 1 M-30 2 M-30

2 - TEMPERATURE TRANSMITTER TIT-114 SEE DETAIL 4 M-30

3 - TEMPERATURE ELEMENT TE-114 SEE DETAIL 3 M-30

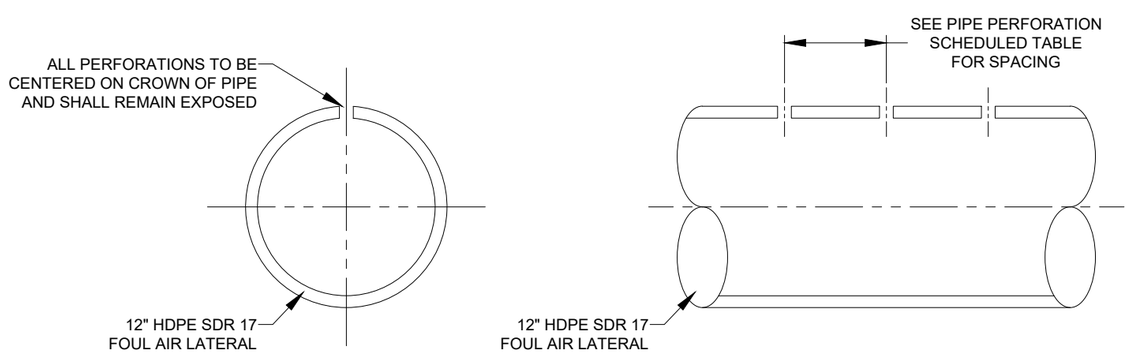

Biofilter Pipe Perforation Detail 2 M-10

NO SCALE

PIPE PERFORATION SCHEDULE			
SECTION	NUMBER OF PIPE PERFORATIONS	CL TO CL DIMENSION	PERFORATION SIZE
1	40	5"	7/8"
2	22	4-1/2"	7/8"
3	135	3"	7/8"
4	140	2-1/2"	7/8"

NOTE:
DRILL PIPE PERFORATION AFTER CONCRETE CURING IS COMPLETE

MONTANA John R. Godak No. 12132PE 2/12/25 LICENSED PROFESSIONAL ENGINEER

Revision	Date	By
30% Draft	8/1/24	AE
60% Draft	11/18/24	AE
90% Draft	1/31/25	AE
Final	2/14/25	AE

Revision: Final
Plot Scale: 1:2
Drawn By: A.Eckhart, P.E.
Approved By: P.Montgomery, P.E.
Checked By: A.Eckhart, P.E.
Checked By: T.Williams, P.E.
Designed By: P.Montgomery, P.E.
Designed By: T.Pipher, P.E.

Engineer
Anderson~Montgomery CONSULTING ENGINEERS
1064 N. Warren
Helena, MT 59601
Phone (406) 449-3303

Jacobs
999 Main Street
STE. 1200
Boise, ID 83702
Phone (406) 212-4520

Owner: City Of Missoula

Project Title: Garden City Compost Facility Improvements

Sheet Title: **Biofilter 2 Piping Details**

Sheet: **M-10**

X:\MISSOULA COMPOST\DESIGN\DRAWINGS\Sheets\7 – Mechanical\M-10 Biofilter 2 Detail.dwg SAVED: 2/12/25 PRINTED: 2/14/25 BY: ADAM

CALLOUTS:

① - BIO-FAN-302: 50 HP BLOWER (NEW YORK BACKWARD INCLINED SWSI CLASS 4 SIZE 27 OR PRE-APPROVED EQUAL)
② - 30" HDPE SDR 17 PIPE SPOOL
③ - 30" HDPE SDR 17 BUTT FUSE 3 SEGMENT 45° BEND
④ - 30" HDPE SDR 17 BUTT FUSE 3 SEGMENT 90° BEND
⑤ - HDPE FLANGE (TYP.)
⑥ - 30" FLxFL FLEXIBLE CONNECTION
⑦ - FLxS.S. ADAPTER (TYP. ALL TRANSITIONS FROM S.S. TO FLANGE FITTINGS)
⑧ - 30" S.S. 12 GAUGE DUCT TEE
⑨ - 30" FLxFL GREENHECK HCDR-351 DAMPER
⑩ - 30" S.S. 12 GAUGE DUCT 90° BEND
⑪ - S.S 12 GAUGE DUCT RECTANGULAR TO 36" ROUND TRANSITION
⑫ - 36" FLxFL GREENHECK HCDR-351 DAMPER
⑬ - 36" S.S. 12 GAUGE DUCT TEE
⑭ - 36" S.S. 12 GAUGE DUCT FABRICATED HEADER WITH END CAPS AND 12" LATERAL CONNECTIONS
⑮ - 12" S.S. 12 GAUGE DUCT LATERAL
⑯ - 12" S.S. 12 GAUGE DUCT FIELD FIT
⑰ - 12" S.S. TO 12" HDPE SDR 17 ADAPTER
⑱ - 12" HDPE SDR 17 BUTT FUSE 90° BEND
⑲ - 12" HDPE SDR 17 PIPE FIELD FIT
⑳ - 12" HDPE SDR 17 BUTT FUSE TEE
㉑ - 12" BLIND FLANGE
㉒ - 12" HDPE SDR 17 BIOFILTER AERATION LATERAL - FOR PIPE ELEVATION WITH RESPECT TO CONCRETE SLAB SEE DETAIL 1/M-8
㉓ - HOLZ FLEXIBLE JOINT STYLE 942 OR EQUAL

NOTES:

- 30" & 36" STAINLESS STEEL DUCT NOT OFF THE SHELF ITEMS. TYPICALLY REQUIRES FABRICATION.
- BIOFILTER MEDIA PILE LENGTH - 100'
- ALL FLANGE ADAPTERS SHALL UTILIZE AN IRON FLANGE.
- FOR COMPOST CONDENSATE DRAIN SEE SHEET M-15.
- FOR FOUL AIR TO BIOFILTER CONDENSATE COLLECTION SEE SHEET M-18.
- ALL PIPES PASSING THROUGH A CONCRETE SLAB SHALL UTILIZE A SLEEVE, SEE CIVIL DETAILS.

INSTRUMENT LEGEND:

1 - PRESSURE TRANSMITTER PIT-102 SEE DETAILS 1/M-30 2/M-30
2 - TEMPERATURE TRANSMITTER TIT-114 SEE DETAIL 4/M-30
3 - TEMPERATURE ELEMENT TE-114 SEE DETAIL 3/M-30

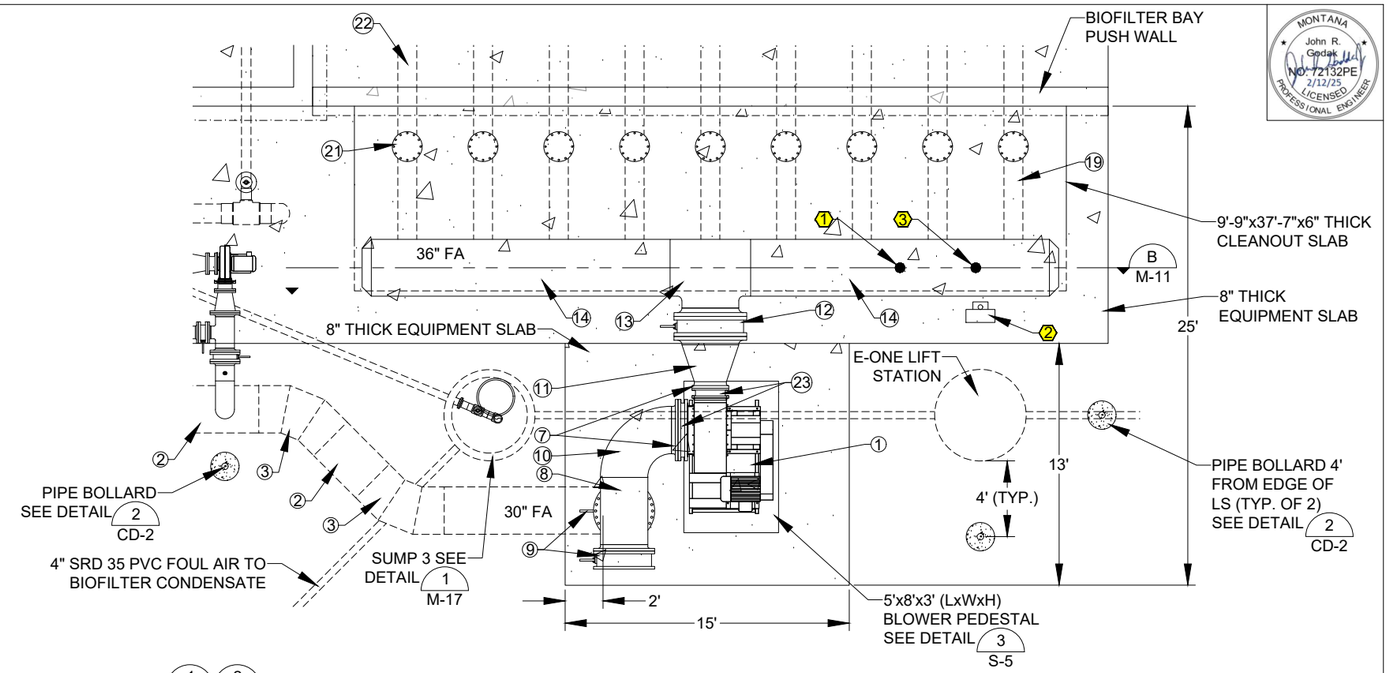

Biofilter 2 Piping Plan 1/M-10

4 2 0 4 8 Feet

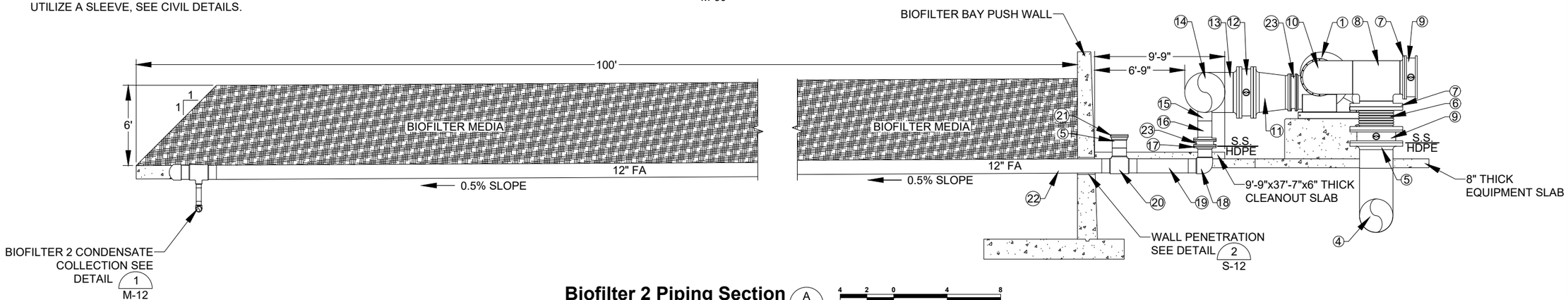

Biofilter 2 Piping Section A/M-10

4 2 0 4 8 Feet

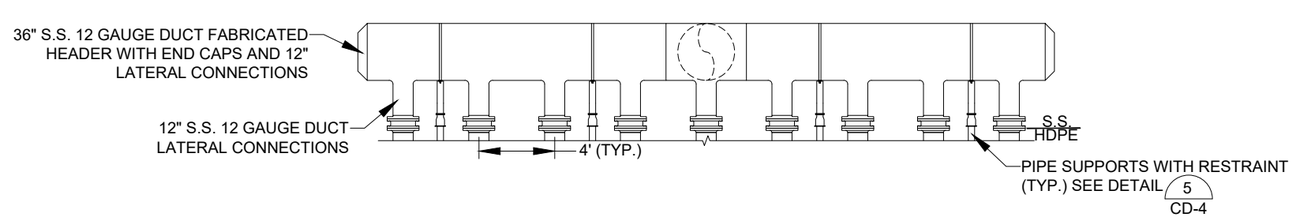

Biofilter 2 Header Section B/M-11

4 2 0 4 8 Feet

MONTANA John R. Gedak NO. 12132PE 2/12/25 LICENSED PROFESSIONAL ENGINEER

Revision	Date	By
30% Draft	8/1/24	AE
60% Draft	11/18/24	AE
90% Draft	1/31/25	AE
Final	2/14/25	AE

Revision: Final
Plot Scale: 1:2
Drawn By: A.Eckhart, P.E.
Approved By: P.Montgomery, P.E.
Checked By: A.Eckhart, P.E.
Checked By: T.Williams, P.E.
Designed By: P.Montgomery, P.E.
Designed By: T.Pipher, P.E.

Engineer
Anderson~Montgomery CONSULTING ENGINEERS
1064 N. Warren
Helena, MT 59601
Phone (406) 449-3303

Jacobs
999 Main Street
STE. 1200
Boise, ID 83702
Phone (406) 212-4520

Owner: City Of Missoula

Project Title: Garden City Compost Facility Improvements

Sheet Title: **Biofilter 2 Piping Details**

Sheet: **M-11**

X:\MISSOULA COMPOST\DESIGN\DRAWINGS\Sheets\7 - Mechanical\M-11 Biofilter 2 Piping Details.dwg SAVED: 2/12/25 PRINTED: 2/14/25 BY: ADAM

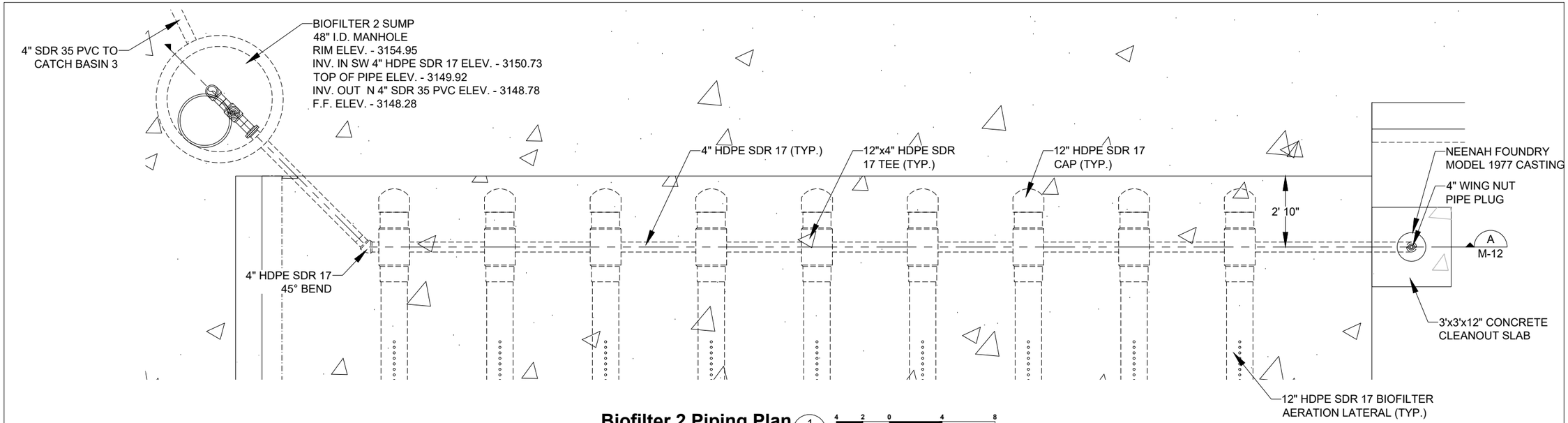

Biofilter 2 Piping Plan 1 / M-10

4 2 0 4 8 Feet

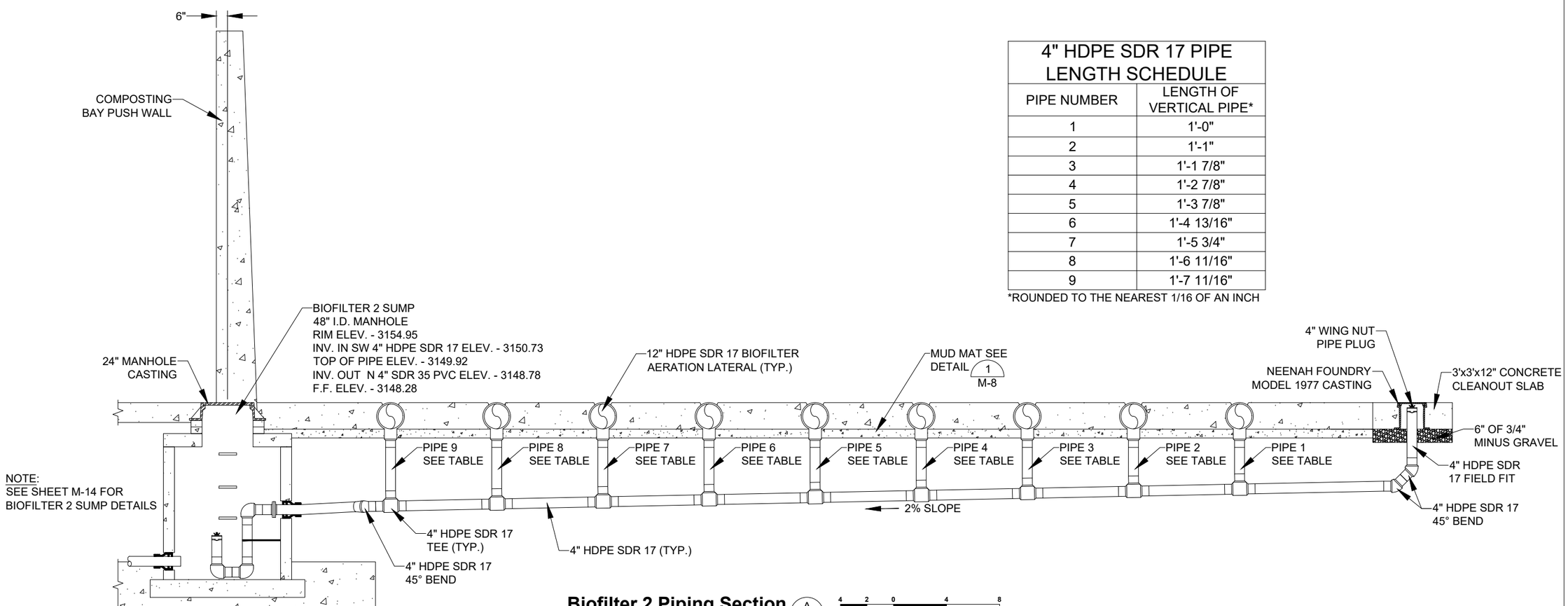

Biofilter 2 Piping Section A / M-12

4 2 0 4 8 Feet

4" HDPE SDR 17 PIPE LENGTH SCHEDULE

PIPE NUMBER	LENGTH OF VERTICAL PIPE*
1	1'-0"
2	1'-1"
3	1'-1 7/8"
4	1'-2 7/8"
5	1'-3 7/8"
6	1'-4 13/16"
7	1'-5 3/4"
8	1'-6 11/16"
9	1'-7 11/16"

*ROUNDED TO THE NEAREST 1/16 OF AN INCH

Revision	Date	By
30% Draft	8/1/24	AE
60% Draft	11/18/24	AE
90% Draft	1/31/25	AE
Final	2/14/25	AE

Revision: Final
Plot Scale: 1:2
Drawn By: A.Eckhart, P.E.
Approved By: P.Montgomery, P.E.
Checked By: A.Eckhart, P.E.
Checked By: T.Williams, P.E.
Designed By: P.Montgomery, P.E.
Designed By: T.Pipher, P.E.

Engineer
Anderson~Montgomery CONSULTING ENGINEERS
1064 N. Warren
Helena, MT 59601
Phone (406) 449-3303

Jacobs
999 Main Street
STE. 1200
Boise, ID 83702
Phone (406) 212-4520

Owner: City Of Missoula

Project Title: Garden City Compost Facility Improvements

Sheet Title: **Biofilter 2 Condensate Collection Details**

Sheet: **M-12**

X:\MISSOULA COMPOST\DESIGN\DRAWINGS\Sheets\7 – Mechanical\M-12 Biofilter 2 Condensate Collection Details.dwg SAVED: 2/6/25 PRINTED: 2/11/25 BY: ADAM

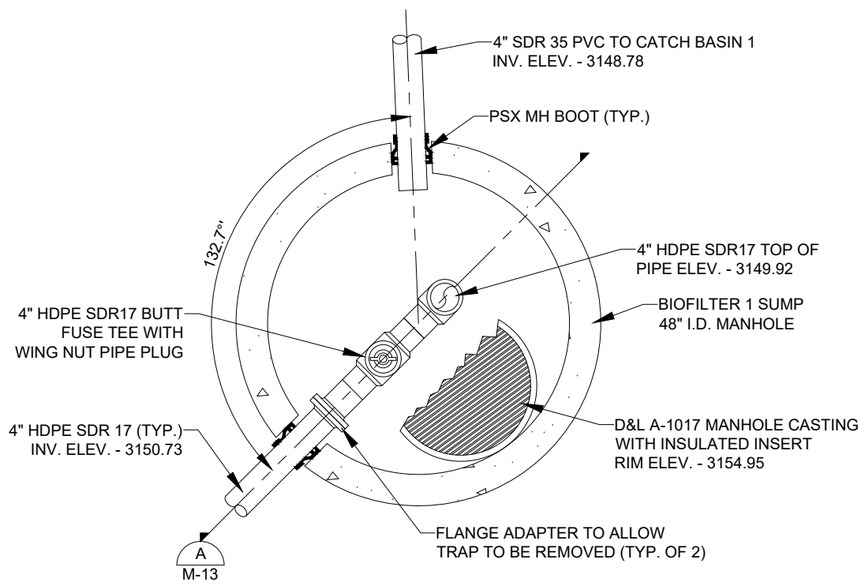

Biofilter 1 Condensate Sump 1 (1 / M-9)

0.5 0.25 0 0.5 1
Feet

N

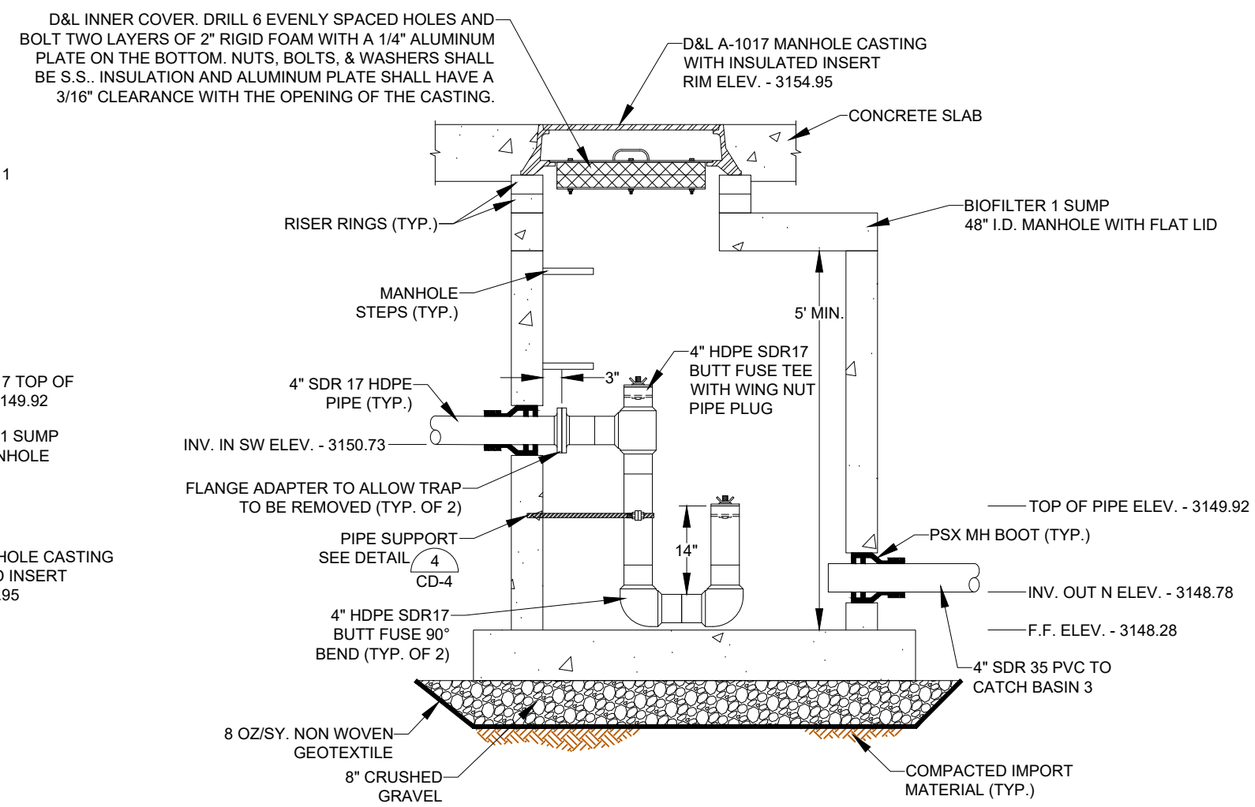

Biofilter 1 Condensate Sump 1 Section (A / M-13)

0.5 0.25 0 0.5 1
Feet

NOTE:

- PIPE PENETRATIONS, CASTING & MANHOLE STEPS ROTATED FOR DRAWING CLARITY.
- ALL FLANGE ADAPTERS SHALL UTILIZE IRON FLANGES & STAINLESS STEEL BOLTS/NUTS.
- PROVIDE WING NUT PIPE PLUG FOR STAND PIPE.

Revision	Date	By
30% Draft	8/1/24	AE
60% Draft	11/18/24	AE
90% Draft	1/31/25	AE
Final	2/14/25	AE

Revision: Final
Plot Scale: 1:2
Drawn By: A.Eckhart, P.E.
Approved By: P.Montgomery, P.E.
Checked By: A.Eckhart, P.E.
Checked By: T.Williams, P.E.
Designed By: P.Montgomery, P.E.
Designed By: T.Pipher, P.E.

Engineer
Anderson~Montgomery CONSULTING ENGINEERS
1064 N. Warren
Helena, MT 59601
Phone (406) 449-3303

Jacobs
999 Main Street
STE. 1200
Boise, ID 83702
Phone (406) 212-4520

Owner: City Of Missoula

Project Title: Garden City Compost Facility Improvements

Sheet Title: **Biofilter 1 Condensate Sump 1 Details**

Sheet: **M-13**

X:\MISSOULA COMPOST\DESIGN\DRAWINGS\Sheets\7 – Mechanical\M-13 Biofilter 1 Sump Details.dwg SAVED: 2/7/25 PRINTED: 2/11/25 BY: ADAM

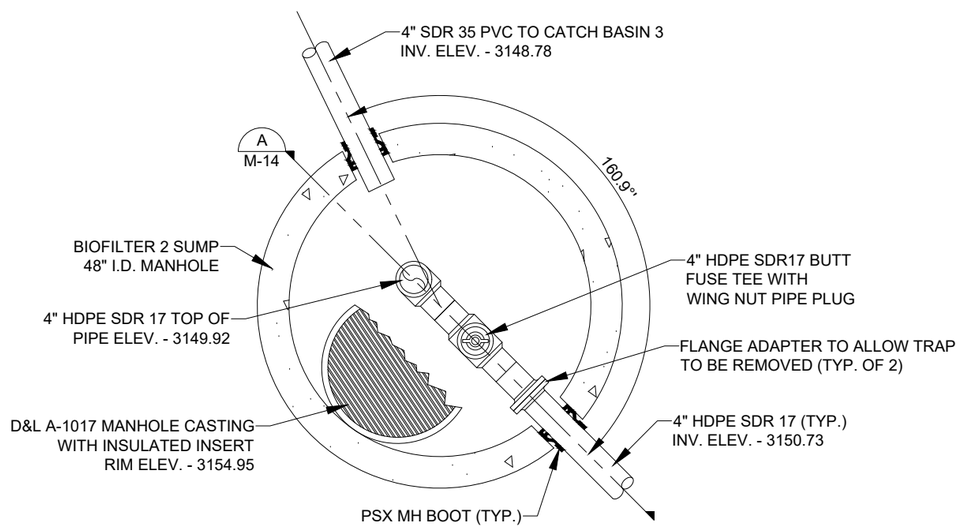

Biofilter 2 Condensate Sump 2 (1 / M-12)

1 0.5 0 1 2
Feet

N

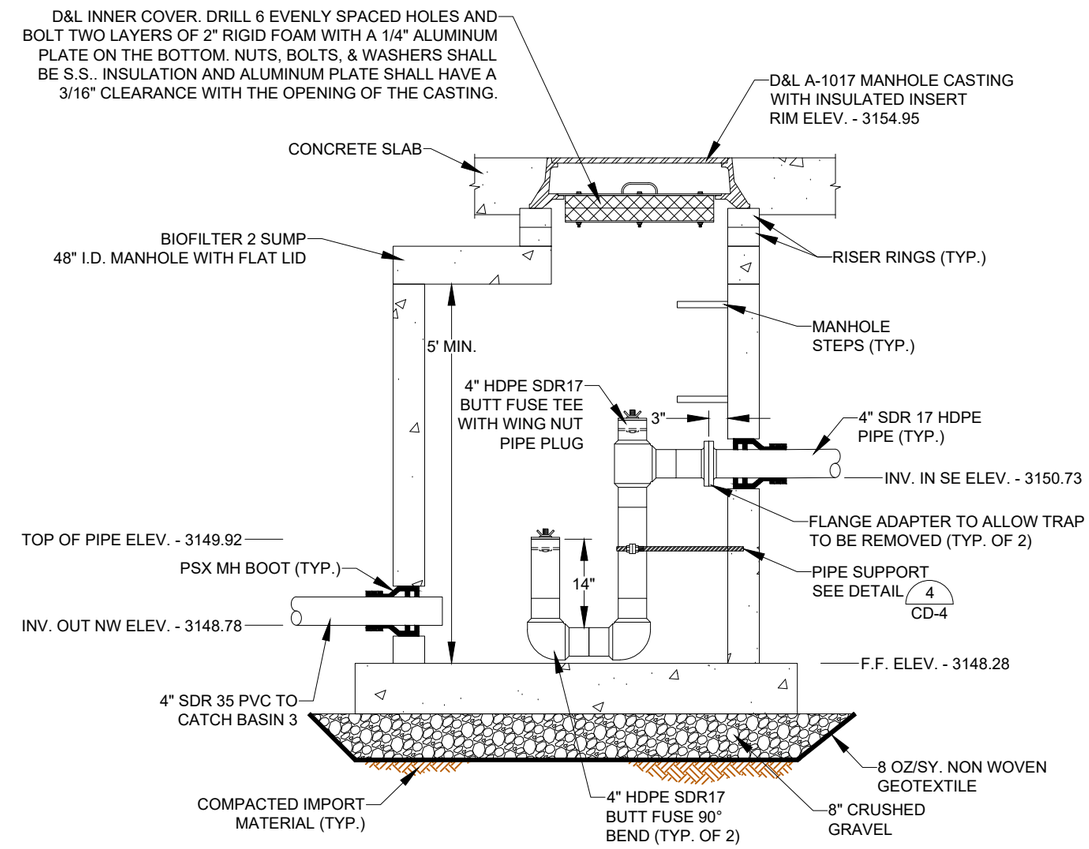

Biofilter 2 Condensate Sump 2 Section (A / M-14)

1 0.5 0 1 2
Feet

NOTE:

- PIPE PENETRATIONS, CASTING & MANHOLE STEPS ROTATED FOR DRAWING CLARITY.
- ALL FLANGE ADAPTERS SHALL UTILIZE IRON FLANGES & STAINLESS STEEL BOLTS/NUTS.
- PROVIDE WING NUT PIPE PLUG FOR STAND PIPE.

Revision	Date	By
30% Draft	8/1/24	AE
60% Draft	11/18/24	AE
90% Draft	1/31/25	AE
Final	2/14/25	AE

Revision: Final
Plot Scale: 1:2
Drawn By: A.Eckhart, P.E.
Approved By: P.Montgomery, P.E.
Checked By: A.Eckhart, P.E.
Checked By: T.Williams, P.E.
Designed By: P.Montgomery, P.E.
Designed By: T.Pipher, P.E.

Engineer
Anderson~Montgomery
CONSULTING ENGINEERS
1064 N. Warren
Helena, MT 59601
Phone (406) 449-3303

Jacobs
999 Main Street
STE. 1200
Boise, ID 83702
Phone (406) 212-4520

Owner: City Of Missoula

Project Title: Garden City Compost Facility Improvements

Sheet Title: **Biofilter 2 Condensate Sump 2 Details**

Sheet: **M-14**

X:\MISSOULA COMPOST\DESIGN\DRAWINGS\Sheets\7 - Mechanical\M-14 Biofilter 2 Sump Details.dwg SAVED: 2/7/25 PRINTED: 2/11/25 BY: ADAM

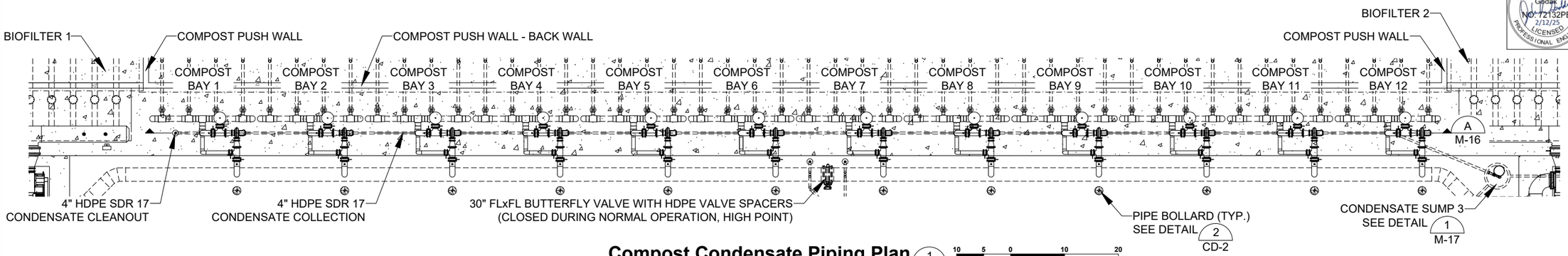

Compost Condensate Piping Plan (1 / M-1)

10 5 0 10 20
Feet

NOTES:

- SEE VIEWPORTS BELOW FOR MORE DETAILS
- CONTRACTOR SHALL INSTALL HDPE VALVE SPACERS FOR THE BURIED BUTTERFLY VALVE. CONTRACTOR SHALL VERIFY VALVE OPERATES PROPERLY WITHOUT INTERFERENCE BEFORE BACKFILLING.

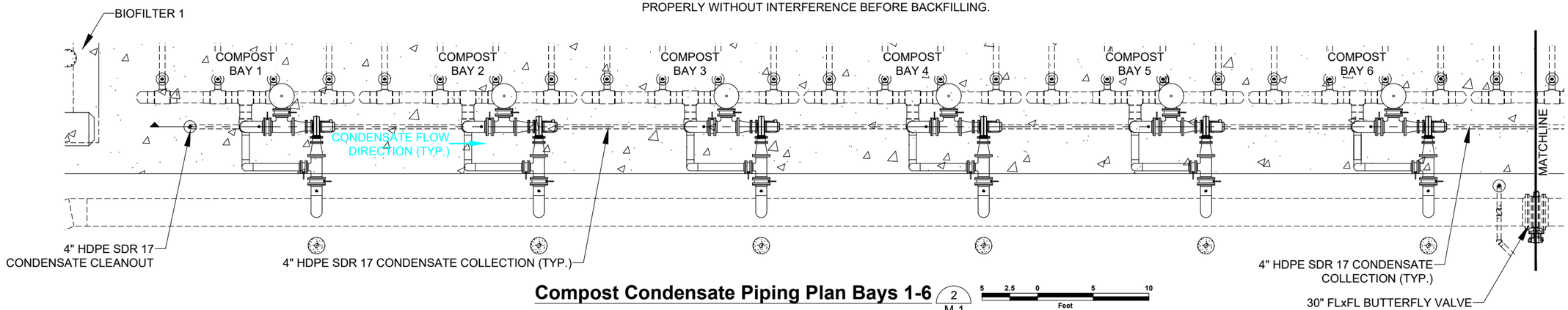

Compost Condensate Piping Plan Bays 1-6 (2 / M-1)

5 2.5 0 5 10
Feet

NOTE:
SECTION LINE CONTINUED THROUGH MATCHLINE.

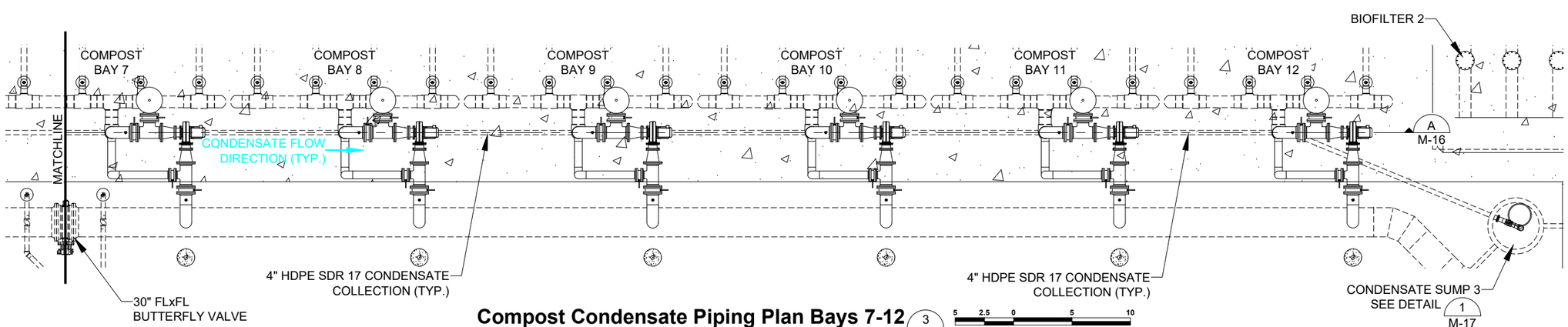

Compost Condensate Piping Plan Bays 7-12 (3 / M-1)

5 2.5 0 5 10
Feet

NOTE:
SECTION LINE CONTINUED THROUGH MATCHLINE.

MONTANA John R. Gedak No. 12132PE 2/12/25 LICENSED PROFESSIONAL ENGINEER

Revision	Date	By
30% Draft	8/1/24	AE
60% Draft	11/18/24	AE
90% Draft	1/31/25	AE
Final	2/14/25	AE

Revision: Final
Plot Scale: 1:2
Drawn By: A.Eckhart, P.E.
Approved By: P.Montgomery, P.E.
Checked By: A.Eckhart, P.E.
Checked By: T.Williams, P.E.
Designed By: P.Montgomery, P.E.
Designed By: T.Pipher, P.E.

Engineer
Anderson~Montgomery CONSULTING ENGINEERS
1064 N. Warren
Helena, MT 59601
Phone (406) 449-3303

Jacobs
999 Main Street
STE. 1200
Boise, ID 83702
Phone (406) 212-4520

Owner
City Of Missoula

Project Title
Garden City Compost Facility Improvements

Sheet Title
Compost Condensate Collection

Sheet
M-15

X:\MISSOULA COMPOST\DESIGN\DRAWINGS\Sheets\7 - Mechanical\M-15 Compost Condensate Collection.dwg SAVED: 2/12/25 PRINTED: 2/14/25 BY: ADAM

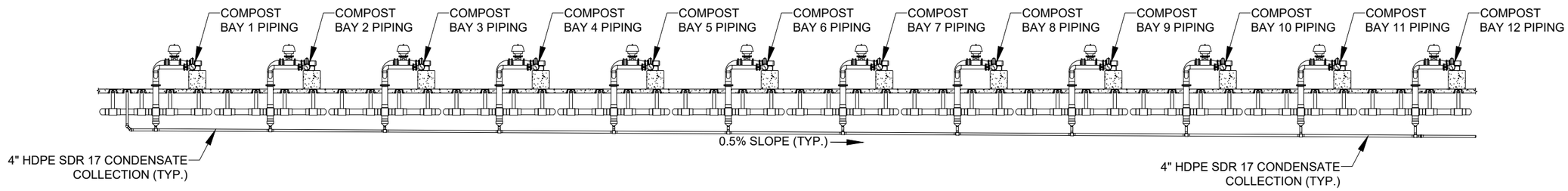

Compost Condensate Section (A / M-15)

10 5 0 10 20 Feet

NOTE:
SEE SECTIONS BELOW FOR MORE DETAILS

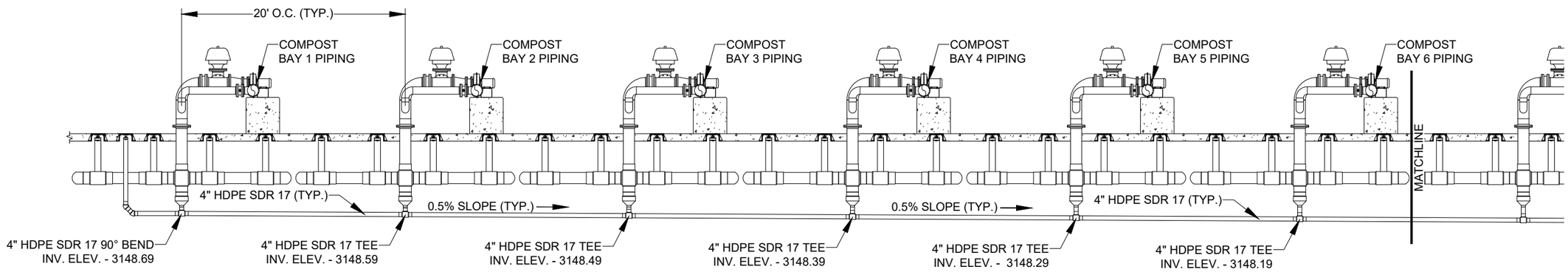

Compost Condensate Section Bays 1-6 (A / M-15)

5 2.5 0 5 10 Feet

NOTE:
- SECTION CONTINUED THROUGH MATCHLINE.
- COMPOST CONDENSATE LINE AT 0.5% SLOPE

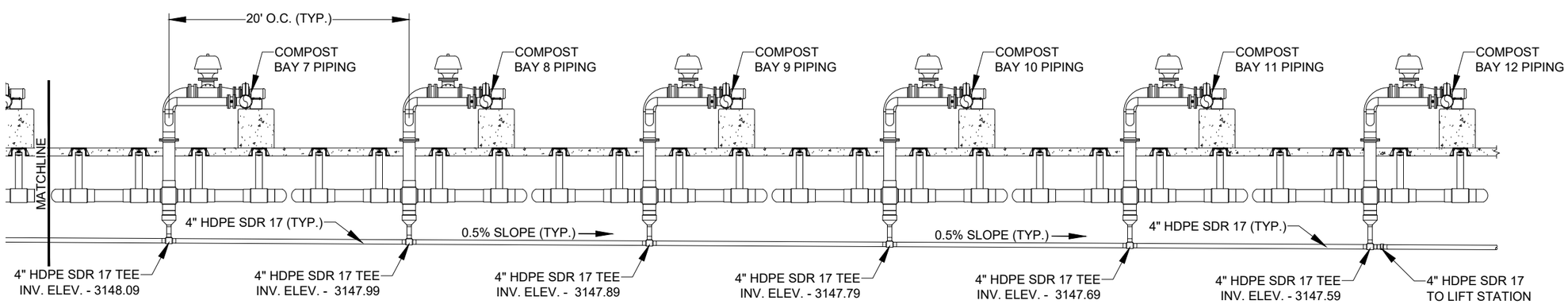

Compost Condensate Section Bays 7-12 (A / M-15)

5 2.5 0 5 10 Feet

NOTE:
- SECTION CONTINUED THROUGH MATCHLINE.
- COMPOST CONDENSATE LINE AT 0.5% SLOPE

MONTANA John R. Gedak No. 72132PE 2/12/25 LICENSED PROFESSIONAL ENGINEER

Revision	Date	By
30% Draft	8/1/24	AE
60% Draft	11/18/24	AE
90% Draft	1/31/25	AE
Final	2/14/25	AE

Revision: Final
Plot Scale: 1:2
Drawn By: A.Eckhart, P.E.
Approved By: P.Montgomery, P.E.
Checked By: A.Eckhart, P.E.
Checked By: T.Williams, P.E.
Designed By: P.Montgomery, P.E.
Designed By: T.Pipher, P.E.

Engineer
Anderson~Montgomery CONSULTING ENGINEERS
1064 N. Warren
Helena, MT 59601
Phone (406) 449-3303

Jacobs
999 Main Street
STE. 1200
Boise, ID 83702
Phone (406) 212-4520

Owner: City Of Missoula

Project Title: Garden City Compost Facility Improvements

Sheet Title: **Compost Condensate Collection Section**

Sheet: **M-16**

X:\MISSOULA COMPOST\DESIGN\DRAWINGS\Sheets\7 – Mechanical\M-16 Compost Condensate Collection Section.dwg SAVED: 2/11/25 PRINTED: 2/14/25 BY: ADAM

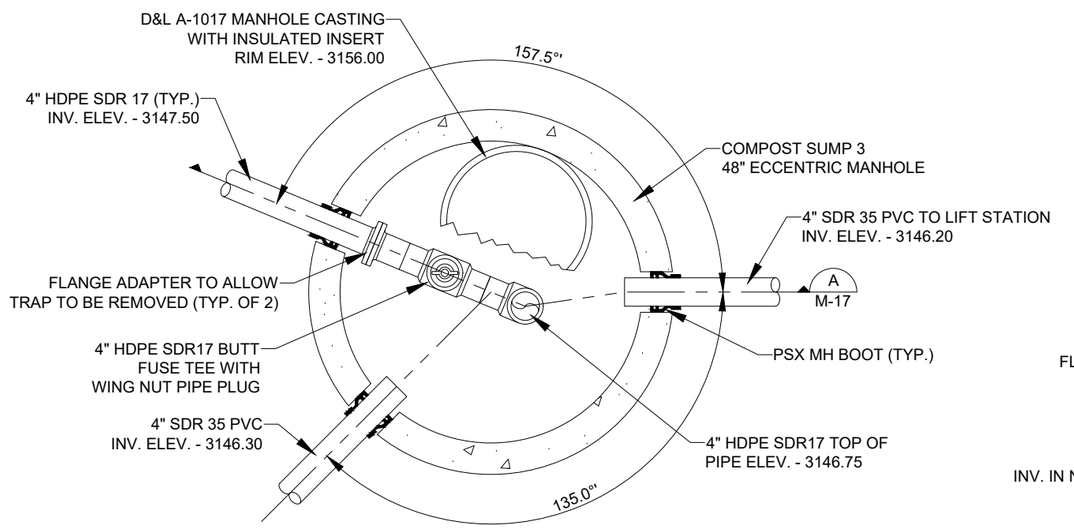

Compost Condensate Sump 3 (1 / M-15,M-18)

1 0.5 0 1 2
Feet

N

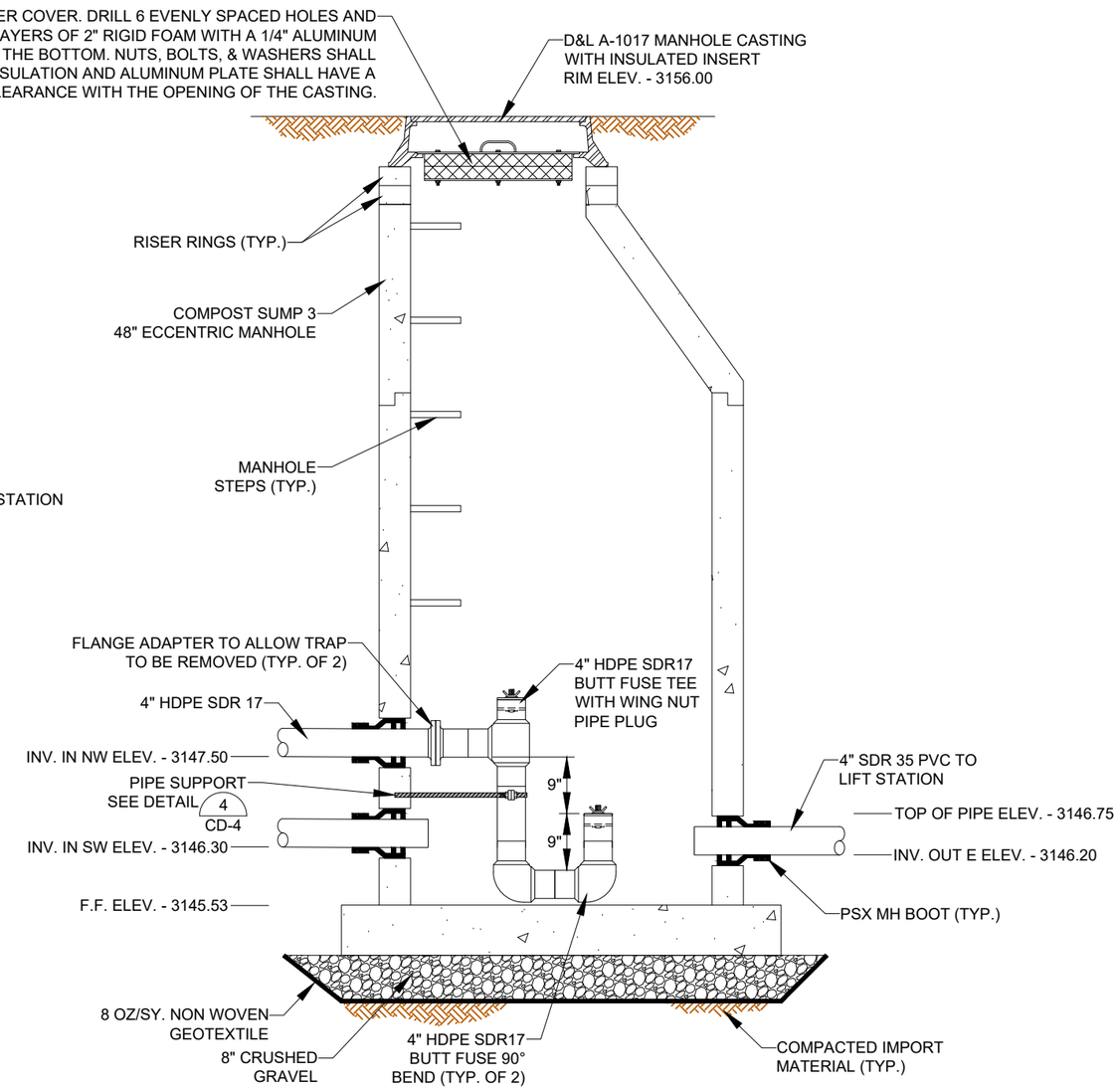

Compost Condensate Sump 3 Section (A / M-17)

1 0.5 0 1 2
Feet

NOTE:
- PIPE PENETRATIONS, CASTING, AND MANHOLE STEPS ROTATED FOR DRAWING CLARITY.
- ALL FLANGE ADAPTERS SHALL UTILIZE IRON FLANGES & STAINLESS STEEL BOLTS/NUTS.

Revision	Date	By
30% Draft	8/1/24	AE
60% Draft	11/18/24	AE
90% Draft	1/31/25	AE
Final	2/14/25	AE

Revision: Final
Plot Scale: 1:2
Drawn By: A.Eckhart, P.E.
Approved By: P.Montgomery, P.E.
Checked By: A.Eckhart, P.E.
Checked By: T.Williams, P.E.
Designed By: P.Montgomery, P.E.
Designed By: T.Pipher, P.E.

Engineer
Anderson~Montgomery CONSULTING ENGINEERS
1064 N. Warren
Helena, MT 59601
Phone (406) 449-3303

Jacobs
999 Main Street
STE. 1200
Boise, ID 83702
Phone (406) 212-4520

Owner: City Of Missoula

Project Title: Garden City Compost Facility Improvements

Sheet Title: **Compost Condensate Sump 3 Details**

Sheet: **M-17**

X:\MISSOULA COMPOST\DESIGN\DRAWINGS\Sheets\7 – Mechanical\M-17 Compost Sump 3 Details.dwg SAVED: 2/7/25 PRINTED: 2/11/25 BY: ADAM

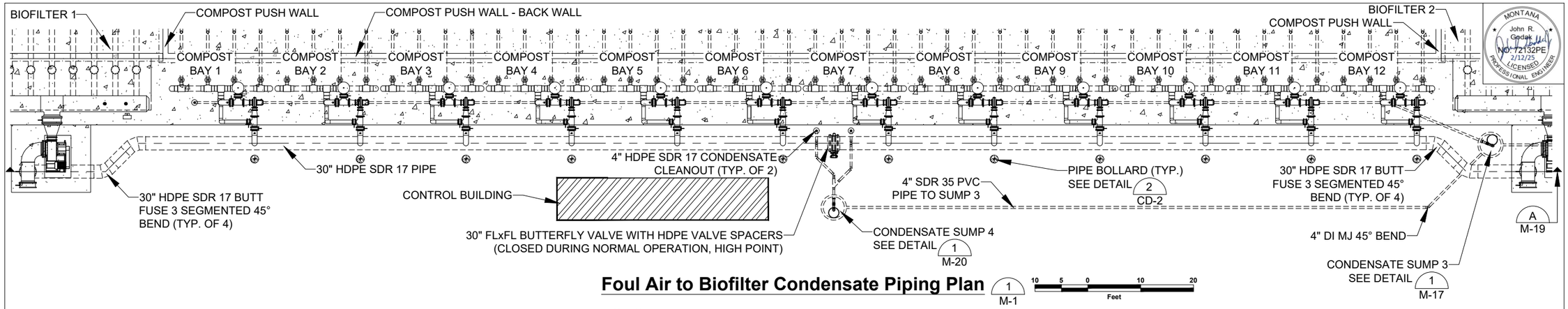

Foul Air to Biofilter Condensate Piping Plan (1 / M-1)

10 5 0 10 20 Feet

NOTES:

- SEE VIEWPORTS BELOW FOR MORE DETAILS
- CONTRACTOR SHALL INSTALL HDPE VALVE SPACERS FOR THE BURIED BUTTERFLY VALVE. CONTRACTOR SHALL VERIFY VALVE OPERATES PROPERLY WITHOUT INTERFERENCE BEFORE BACKFILLING.

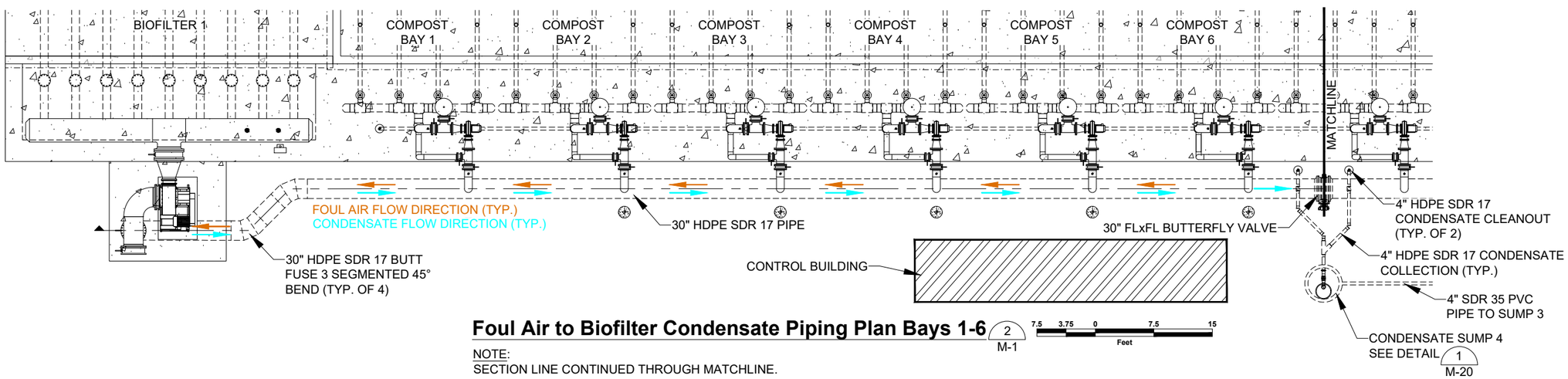

Foul Air to Biofilter Condensate Piping Plan Bays 1-6 (2 / M-1)

7.5 3.75 0 7.5 15 Feet

NOTE:
SECTION LINE CONTINUED THROUGH MATCHLINE.

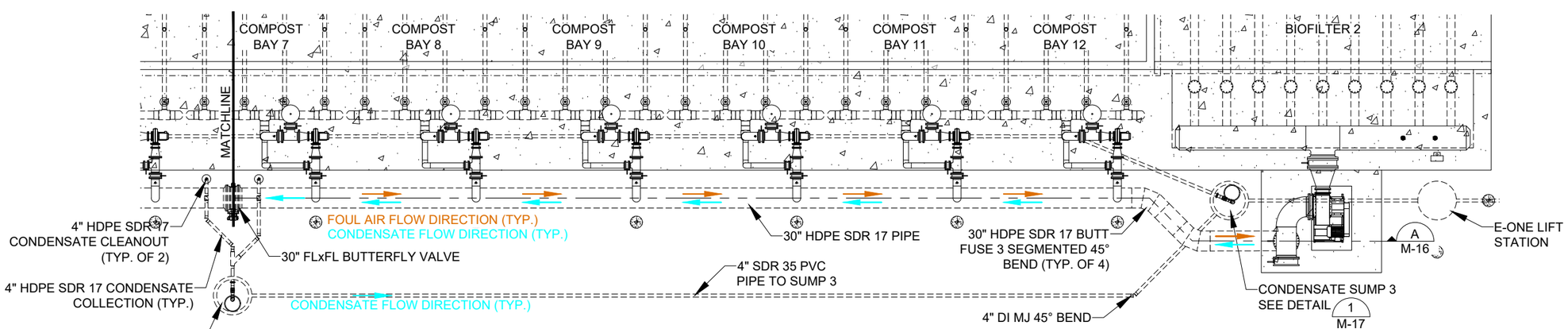

Foul Air to Biofilter Condensate Piping Plan Bays 7-12 (3 / M-1)

7.5 3.75 0 7.5 15 Feet

NOTE:
SECTION LINE CONTINUED THROUGH MATCHLINE.

Revision	Date	By
30% Draft	8/1/24	AE
60% Draft	11/18/24	AE
90% Draft	1/31/25	AE
Final	2/14/25	AE

Revision: Final
Plot Scale: 1:2
Drawn By: A.Eckhart, P.E.
Approved By: P.Montgomery, P.E.
Checked By: A.Eckhart, P.E.
Checked By: T.Williams, P.E.
Designed By: P.Montgomery, P.E.
Designed By: T.Pipher, P.E.

Engineer
Anderson~Montgomery CONSULTING ENGINEERS
1064 N. Warren
Helena, MT 59601
Phone (406) 449-3303

Jacobs
999 Main Street
STE. 1200
Boise, ID 83702
Phone (406) 212-4520

Owner: City Of Missoula

Project Title: Garden City Compost Facility Improvements

Sheet Title: **Foul Air to Biofilter Condensate Collection**

Sheet: **M-18**

X:\MISSOULA COMPOST\DESIGN\DRAWINGS\Sheets\7 - Mechanical\M-18 Foul Air to Biofilter Condensate Collection.dwg SAVED: 2/12/25 PRINTED: 2/14/25 BY: ADAM

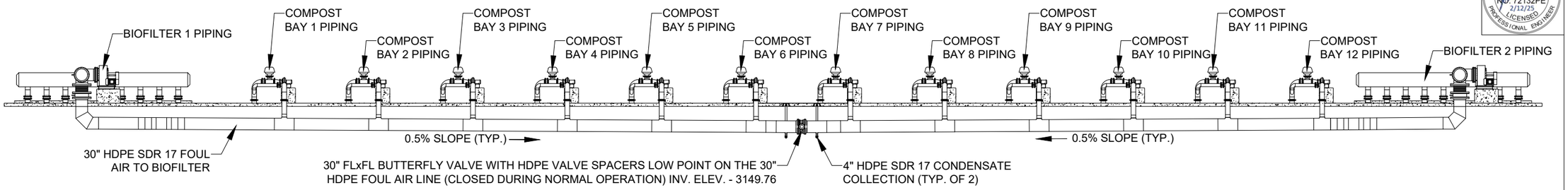

Foul Air to Biofilter Condensate Section (A / M-18)

NO SCALE

NOTES:

- SEE VIEWPORTS BELOW FOR MORE DETAILS
- CONTRACTOR SHALL INSTALL HDPE VALVE SPACERS FOR THE BURIED BUTTERFLY VALVE. CONTRACTOR SHALL VERIFY VALVE OPERATES PROPERLY WITHOUT INTERFERENCE BEFORE BACKFILLING.

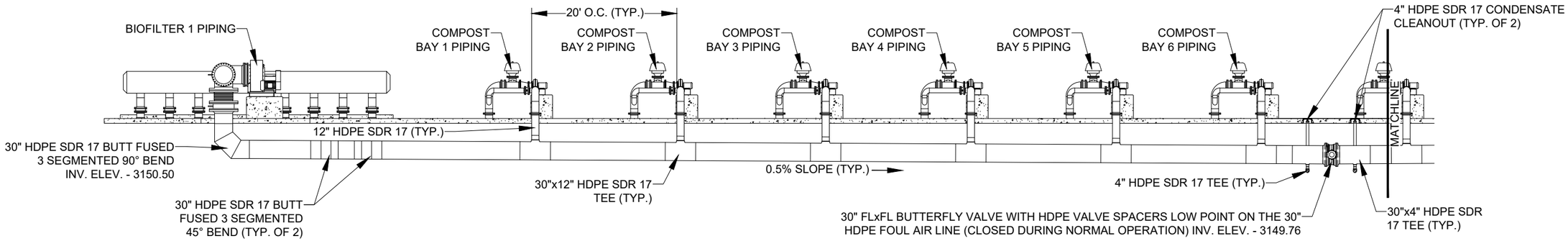

Foul Air to Biofilter Condensate Section Bays 1-6 (A / M-18)

7.5 3.75 0 7.5 15 Feet

NOTE:

- SECTION CONTINUED THROUGH MATCHLINE.

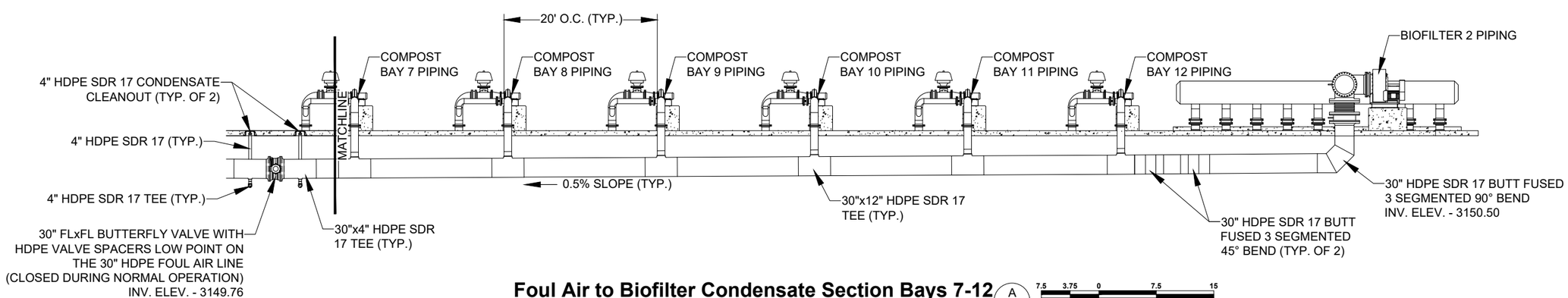

Foul Air to Biofilter Condensate Section Bays 7-12 (A / M-18)

7.5 3.75 0 7.5 15 Feet

NOTE:

- SECTION CONTINUED THROUGH MATCHLINE.

MONTANA John R. Gedak No. 72132PE 2/12/25 LICENSED PROFESSIONAL ENGINEER

Revision	Date	By
30% Draft	8/1/24	AE
60% Draft	11/18/24	AE
90% Draft	1/31/25	AE
Final	2/14/25	AE

Revision: Final
Plot Scale: 1:2
Drawn By: A.Eckhart, P.E.
Approved By: P.Montgomery, P.E.
Checked By: A.Eckhart, P.E.
Checked By: T.Williams, P.E.
Designed By: P.Montgomery, P.E.
Designed By: T.Pipher, P.E.

Engineer
Anderson~Montgomery CONSULTING ENGINEERS
1064 N. Warren
Helena, MT 59601
Phone (406) 449-3303

Jacobs
999 Main Street
STE. 1200
Boise, ID 83702
Phone (406) 212-4520

Owner: City Of Missoula

Project Title: Garden City Compost Facility Improvements

Sheet Title: **Foul Air to Biofilter Condensate Collection Section**

Sheet: **M-19**

X:\MISSOULA COMPOST\DESIGN\DRAWINGS\Sheets\7 - Mechanical\M-19 Foul Air to Biofilter Condensate Collection Section.dwg SAVED: 2/11/25 PRINTED: 2/14/25 BY: ADAM

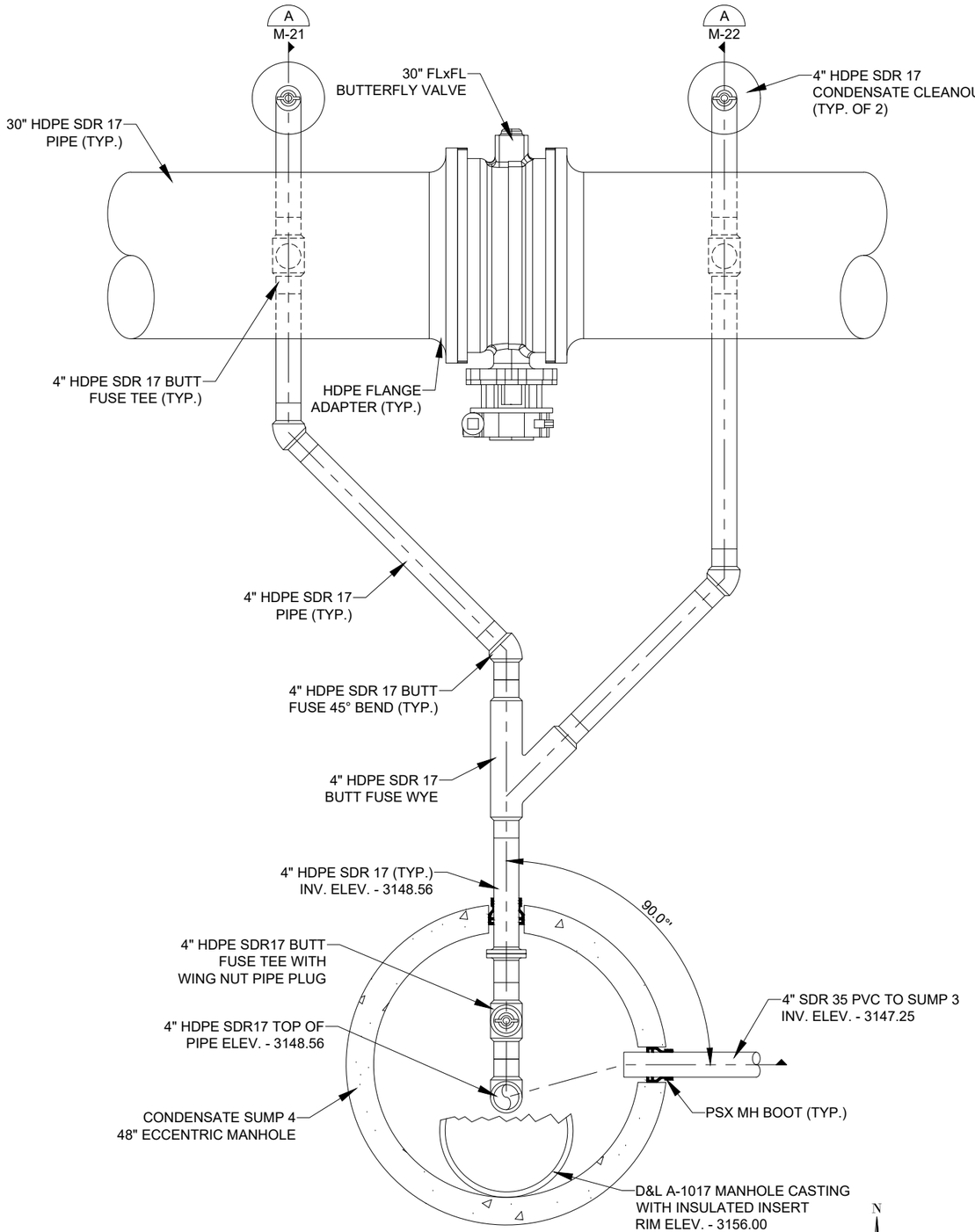

Condensate Sump 4 (1 / M-18)

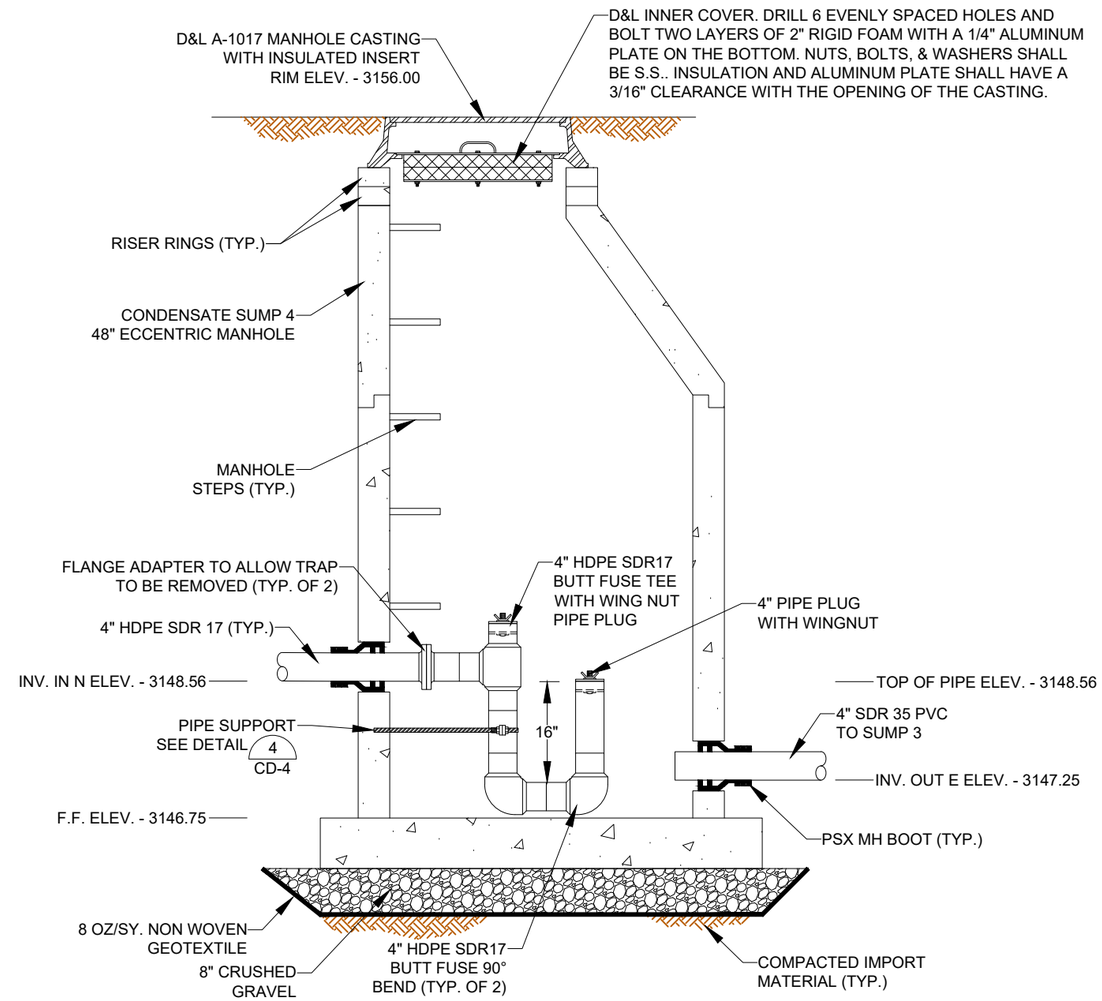

Condensate Sump 4 Section

1 0.5 0 1 2
Feet

NOTE:

- PIPE PENETRATIONS, CASTING, AND MANHOLE STEPS ROTATED FOR DRAWING CLARITY.
- ALL FLANGE ADAPTERS SHALL UTILIZE IRON FLANGES & STAINLESS STEEL BOLTS/NUTS.

Revision	Date	By
30% Draft	8/1/24	AE
60% Draft	11/18/24	AE
90% Draft	1/31/25	AE
Final	2/14/25	AE

Revision: Final
Plot Scale: 1:2
Drawn By: A.Eckhart, P.E.
Approved By: P.Montgomery, P.E.
Checked By: A.Eckhart, P.E.
Checked By: T.Williams, P.E.
Designed By: P.Montgomery, P.E.
Designed By: T.Pipher, P.E.

Engineer
Anderson~Montgomery CONSULTING ENGINEERS
1064 N. Warren
Helena, MT 59601
Phone (406) 449-3303

Jacobs
999 Main Street
STE. 1200
Boise, ID 83702
Phone (406) 212-4520

Owner
City Of Missoula

Project Title
Garden City Compost Facility Improvements

Sheet Title
Condensate Sump 4 Details

Sheet
M-20

X:\MISSOULA COMPOST\DESIGN\DRAWINGS\Sheets\7 - Mechanical\M-20 Condensate Sump 4 Details.dwg SAVED: 2/7/25 PRINTED: 2/11/25 BY: ADAM

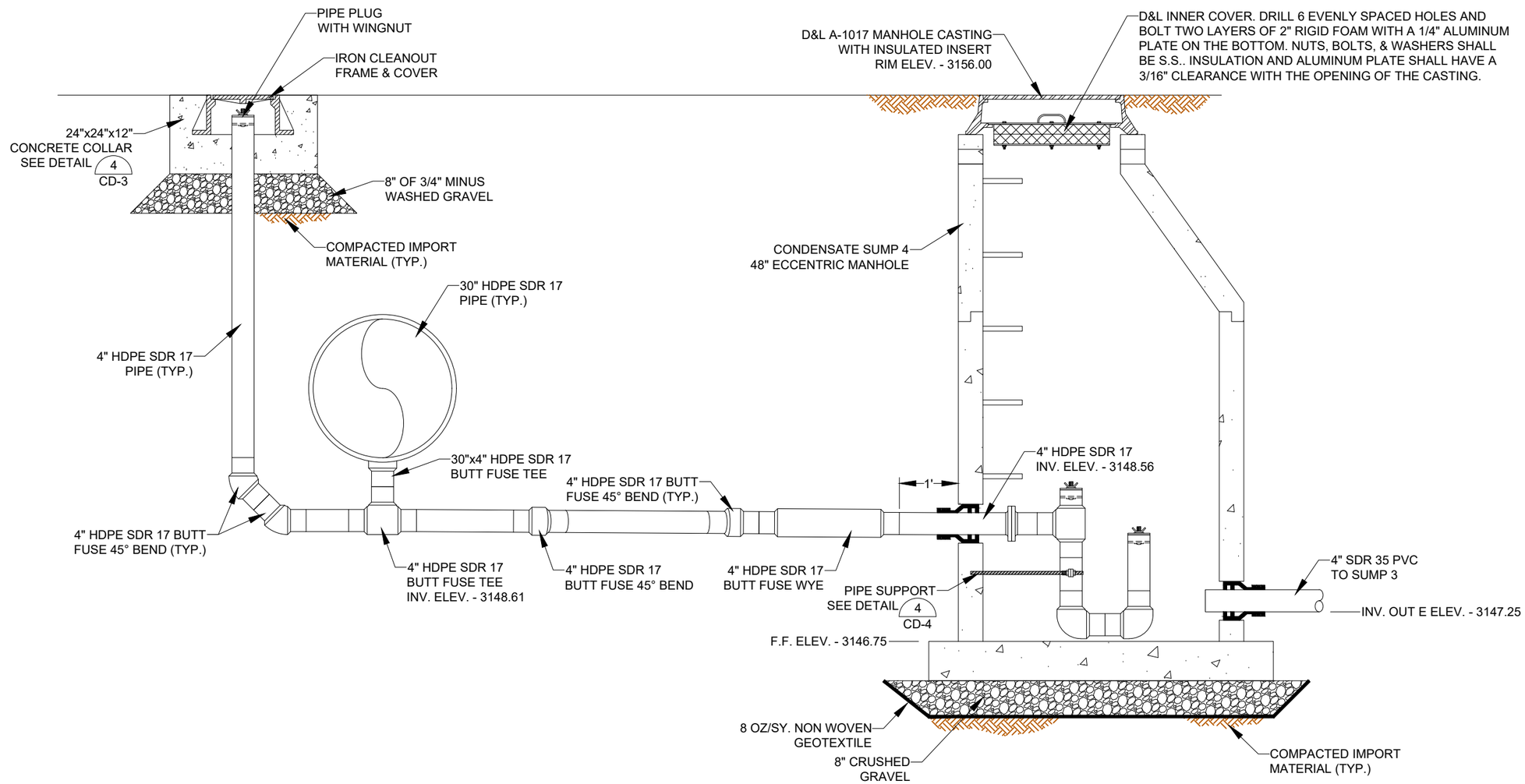

Condensate Sump 4 Section (A / M-20)

1 0.5 0 1 2
Feet

NOTE:

- PIPE PENETRATIONS, CASTING, AND MANHOLE STEPS ROTATED FOR DRAWING CLARITY.
- ALL FLANGE ADAPTERS SHALL UTILIZE IRON FLANGES & STAINLESS STEEL BOLTS/NUTS.
- FOR DETAIL INSIDE SUMP SEE SHEET M-20

Revision	Date	By
30% Draft	8/1/24	AE
60% Draft	11/18/24	AE
90% Draft	1/31/25	AE
Final	2/14/25	AE

Revision: Final
Plot Scale: 1:2
Drawn By: A.Eckhart, P.E.
Approved By: P.Montgomery, P.E.
Checked By: A.Eckhart, P.E.
Checked By: T.Williams, P.E.
Designed By: P.Montgomery, P.E.
Designed By: T.Pipher, P.E.

Engineer
Anderson~Montgomery CONSULTING ENGINEERS
1064 N. Warren
Helena, MT 59601
Phone (406) 449-3303

Jacobs
999 Main Street
STE. 1200
Boise, ID 83702
Phone (406) 212-4520

Owner: City Of Missoula

Project Title: Garden City Compost Facility Improvements

Sheet Title: **Condensate Sump 4 Section**

Sheet: **M-21**

X:\MISSOULA COMPOST\DESIGN\DRAWINGS\Sheets\7 – Mechanical\M-21 Condensate Sump 4 Section.dwg SAVED: 2/7/25 PRINTED: 2/11/25 BY: ADAM

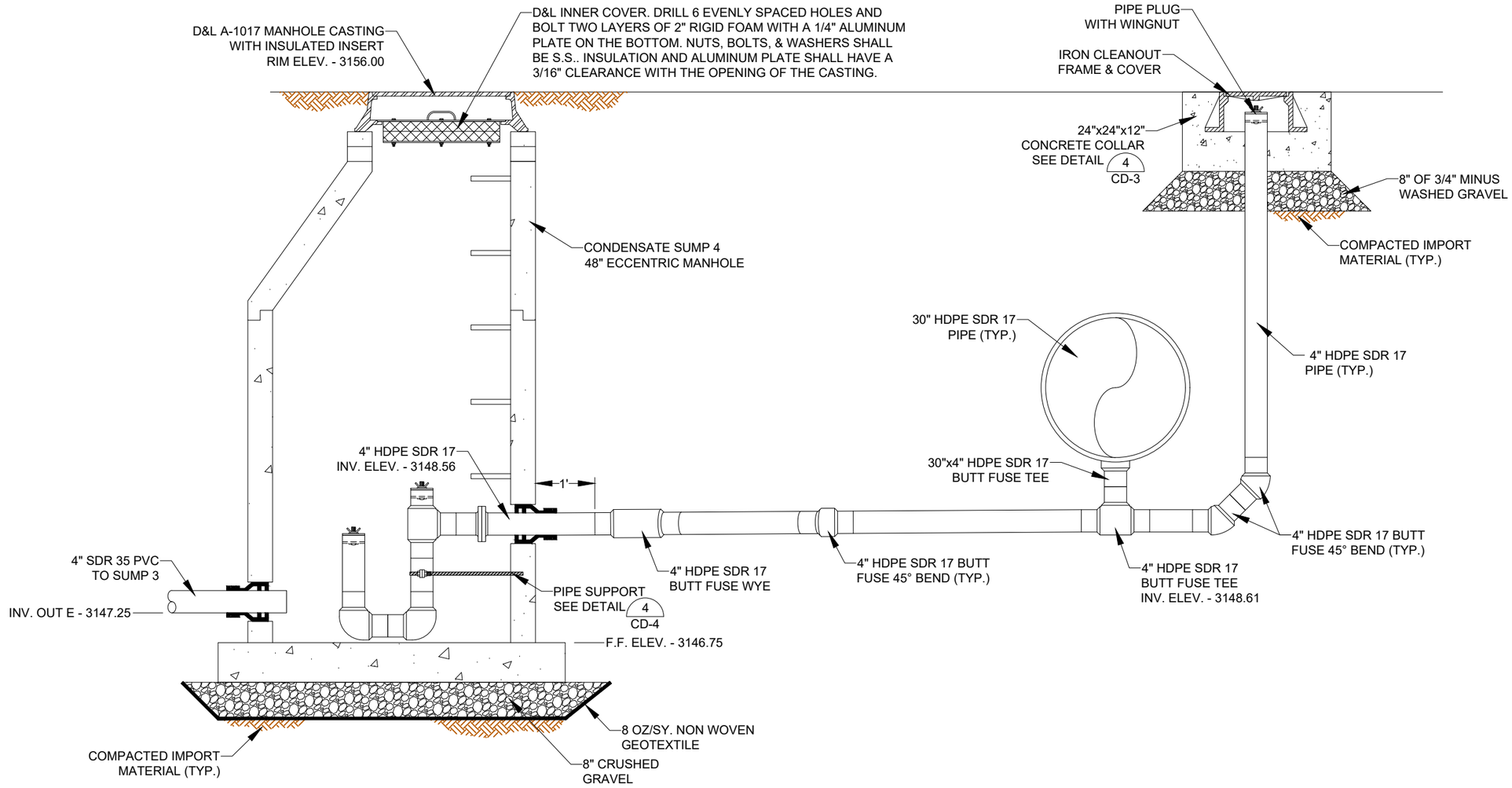

Condensate Sump 4 Section (A / M-20)

1 0.5 0 1 2
Feet

NOTE:

- PIPE PENETRATIONS, CASTING, AND MANHOLE STEPS ROTATED FOR DRAWING CLARITY.
- ALL FLANGE ADAPTERS SHALL UTILIZE IRON FLANGES & STAINLESS STEEL BOLTS/NUTS.
- FOR DETAIL INSIDE SUMP SEE SHEET M-20

Revision	Date	By
30% Draft	8/1/24	AE
60% Draft	11/18/24	AE
90% Draft	1/31/25	AE
Final	2/14/25	AE

Revision: Final
Plot Scale: 1:2
Drawn By: A.Eckhart, P.E.
Approved By: P.Montgomery, P.E.
Checked By: A.Eckhart, P.E.
Checked By: T.Williams, P.E.
Designed By: P.Montgomery, P.E.
Designed By: T.Pipher, P.E.

Engineer
Anderson~ Montgomery
CONSULTING ENGINEERS
1064 N. Warren
Helena, MT 59601
Phone (406) 449-3303

Jacobs
999 Main Street
STE. 1200
Boise, ID 83702
Phone (406) 212-4520

Owner
City Of Missoula

Project Title
Garden City Compost Facility Improvements

Sheet Title
Condensate Sump 4 Section

Sheet
M-22

X:\MISSOULA COMPOST\DESIGN\DRAWINGS\Sheets\7 – Mechanical\M-22 Condensate Sump 4 Section.dwg SAVED: 2/7/25 PRINTED: 2/11/25 BY: ADAM

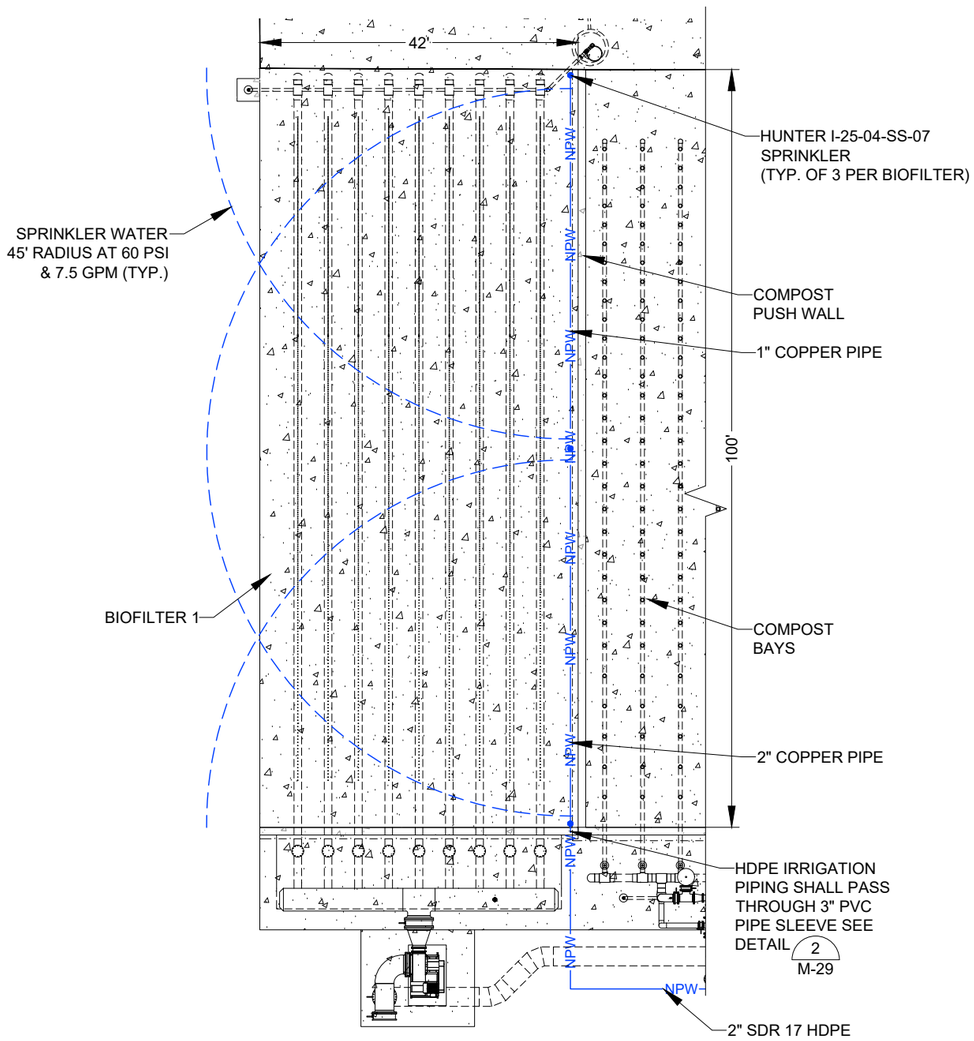

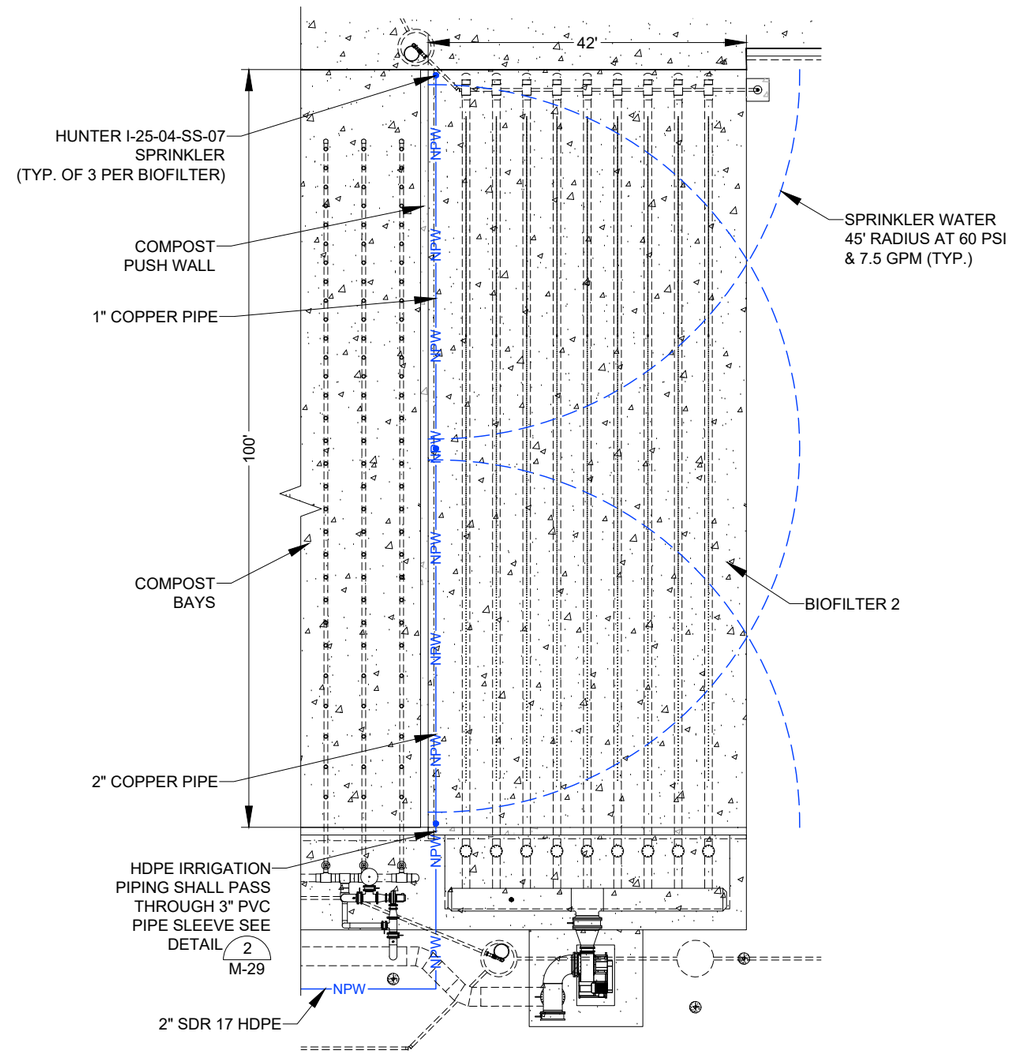

Biofilter Bays Irrigation Plan

10 5 0 10 20
Feet

N

NOTES:

- ALL IRRIGATION PIPING SHALL HAVE A MINIMUM OF 18" OF COVER.
- IRRIGATION PIPING SHALL BE INSTALLED WITH FITTINGS AS SHOWN ON DRAWING OR INSTALLED WITH BENDS NOT EXCEEDING THE BEND RADIUS OF THE PIPE PER THE MANUFACTURER'S RECOMMENDATIONS.
- SPRINKLER ARC LENGTH SHOWN WITH NOZZLE #07 (ORANGE) AT 60 PSI WITH A 48' RADIUS AND 7.5 GPM.
- FOR SPRINKLER MOUNTING SEE DETAIL 2 / M-29

Revision	Date	By
30% Draft	8/1/24	AE
60% Draft	11/18/24	AE
90% Draft	1/31/25	AE
Final	2/14/25	AE

Revision: Final
Plot Scale: 1:2
Drawn By: A.Eckhart, P.E.
Approved By: P.Montgomery, P.E.
Checked By: A.Eckhart, P.E.
Checked By: T.Williams, P.E.
Designed By: P.Montgomery, P.E.
Designed By: T.Pipher, P.E.

Engineer
Anderson~Montgomery CONSULTING ENGINEERS
1064 N. Warren
Helena, MT 59601
Phone (406) 449-3303

Jacobs
999 Main Street
STE. 1200
Boise, ID 83702
Phone (406) 212-4520

Owner: City Of Missoula

Project Title: Garden City Compost Facility Improvements

Sheet Title: **Biofilter Bays Irrigation**

Sheet: **M-23**

X:\MISSOULA COMPOST\DESIGN\DRAWINGS\Sheets\7 – Mechanical\M-23 Biofilter Bays Irrigation.dwg SAVED: 2/7/25 PRINTED: 2/11/25 BY: ADAM

NOTE:
- OWNER SUPPLIED FROM TRANSITIONAL FACILITY

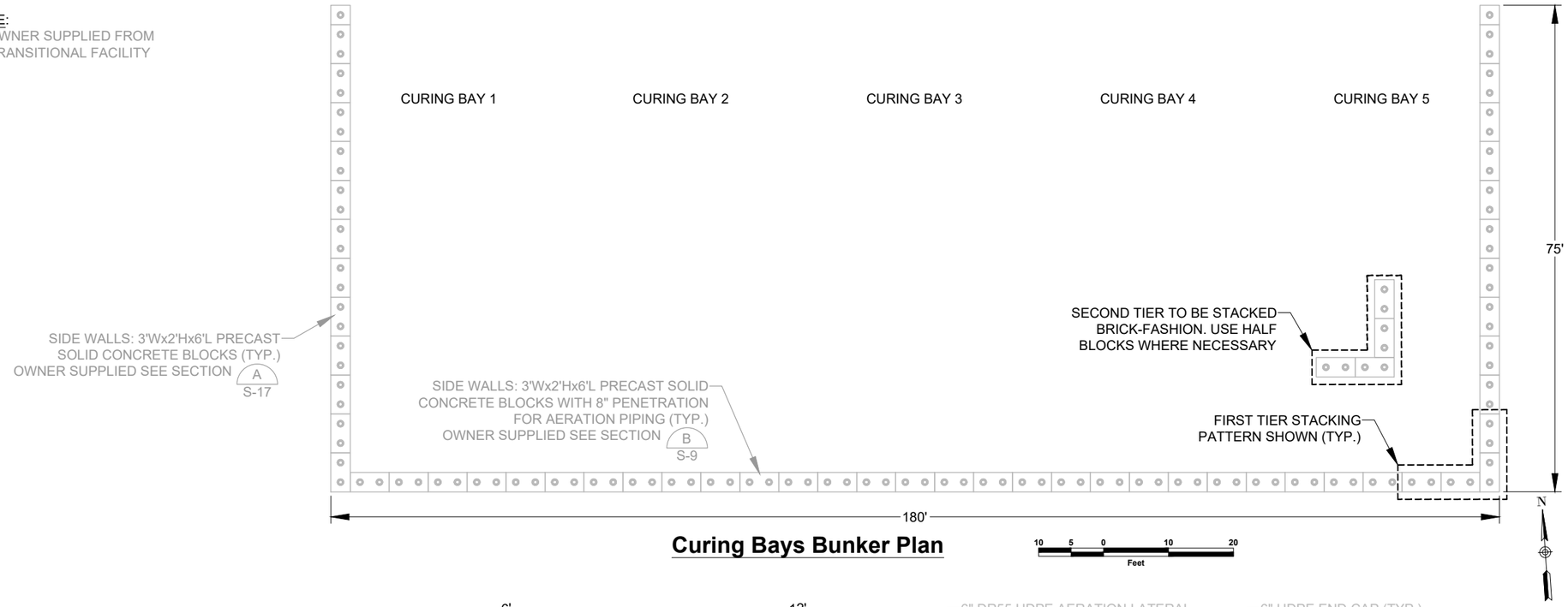

Curing Bays Bunker Plan

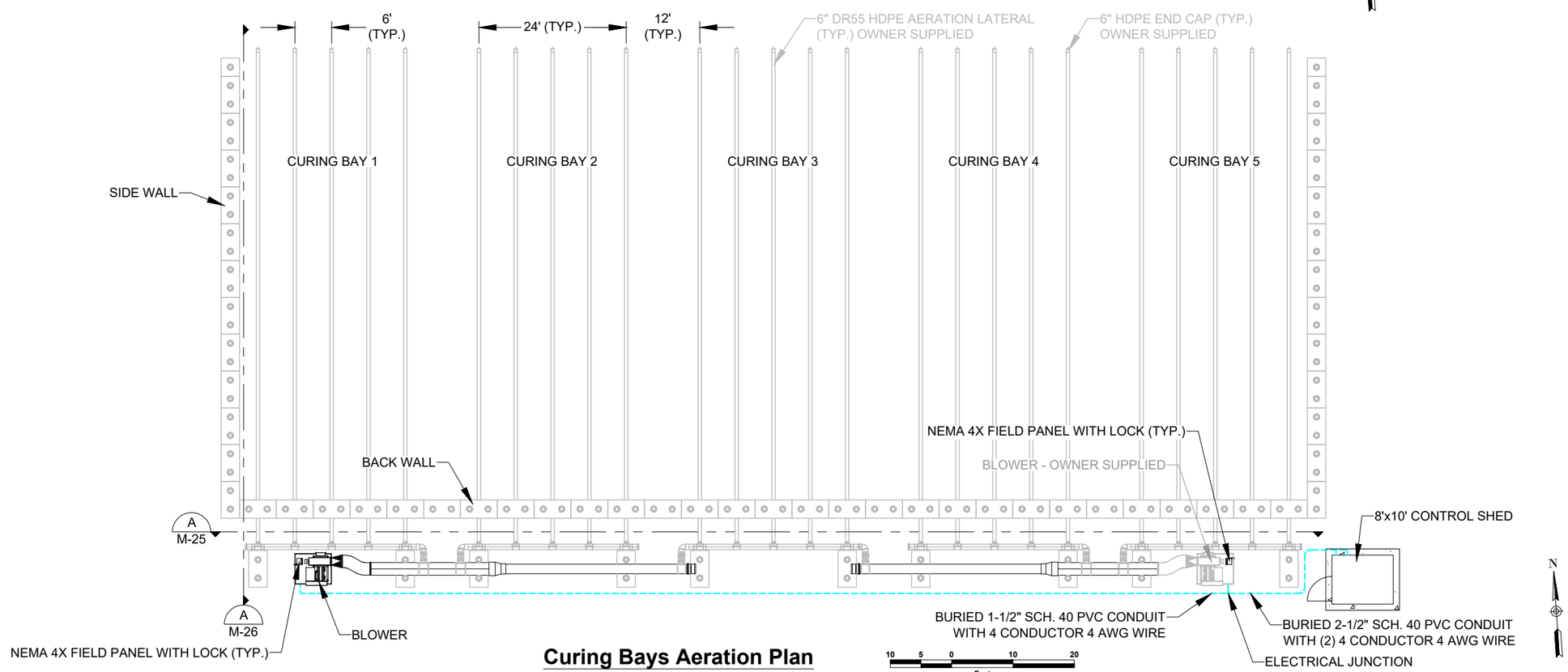

Curing Bays Aeration Plan

Revision	Date	By
30% Draft	8/1/24	AE
60% Draft	11/18/24	AE
90% Draft	1/31/25	AE
Final	2/14/25	AE

Revision: Final
Plot Scale: 1:2
Drawn By: A.Eckhart, P.E.
Approved By: P.Montgomery, P.E.
Checked By: A.Eckhart, P.E.
Designed By: P.Montgomery, P.E.

Engineer:
Anderson~Montgomery CONSULTING ENGINEERS
1064 N. Warren
Helena, MT 59601
Phone (406) 449-3303

Owner: City Of Missoula

Project Title: Garden City Compost Facility Improvements

Sheet Title: **Curing Bays**

Sheet: **M-24**

X:\MISSOULA COMPOST\DESIGN\DRAWINGS\Sheets\7 – Mechanical\M-24 Curing Bays.dwg SAVED: 2/7/25 PRINTED: 2/11/25 BY: ADAM

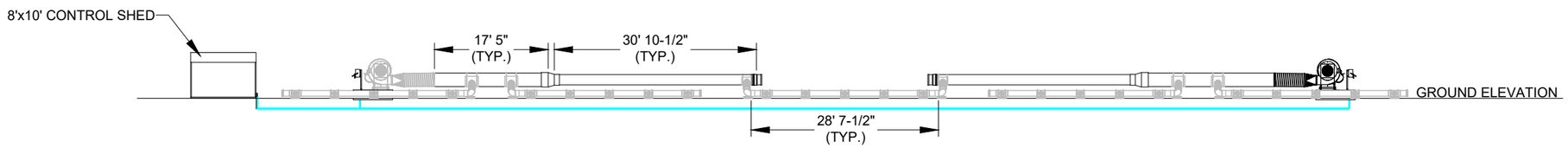

Curing Bays Aeration Section (A / M-24)

10 5 0 10 20
Feet

NOTE:
- SEE VIEWPORTS BELOW FOR MORE DETAILS

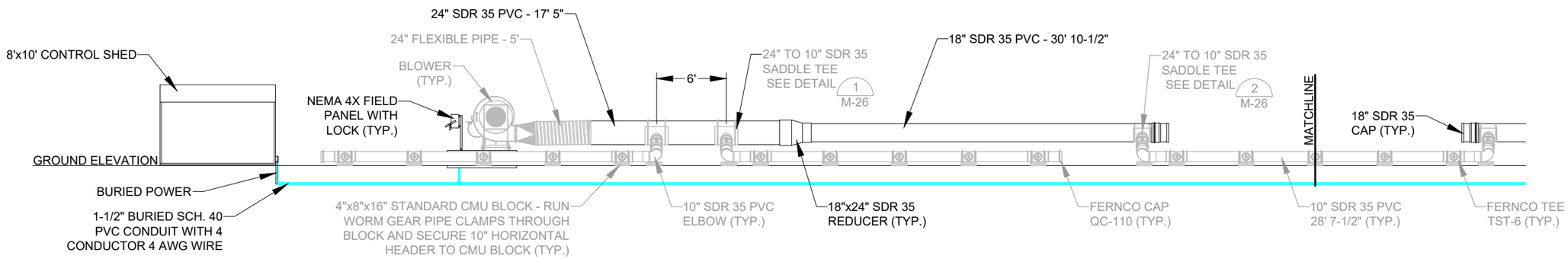

Curing Bays 1-3 Aeration Section (A / M-24)

5 2.5 0 5 10
Feet

NOTE:
- PIPE CLAMPS WILL BE USED IN THE FOLLOWING CONNECTIONS: ALL SADDLES, THE FLEXIBLE PIPE, ALL FERNCO TEES, AND ALL FERNCO CAPS. ALL SADDLES REDUCING TO 10" WILL CONNECT TO A DAMPER AND ACTUATOR.
- OWNER SUPPLIED FROM TRANSITIONAL FACILITY

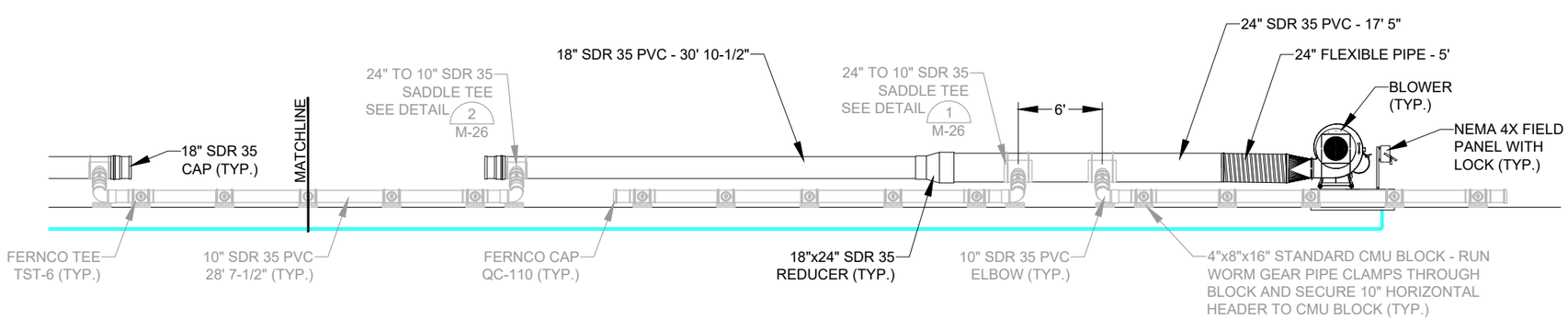

Curing Bays 3-5 Aeration Section (A / M-24)

5 2.5 0 5 10
Feet

NOTE:
- PIPE CLAMPS WILL BE USED IN THE FOLLOWING CONNECTIONS: ALL SADDLES, THE FLEXIBLE PIPE, ALL FERNCO TEES, AND ALL FERNCO CAPS. ALL SADDLES REDUCING TO 10" WILL CONNECT TO A DAMPER AND ACTUATOR.
- OWNER SUPPLIED FROM TRANSITIONAL FACILITY

Revision	Date	By
30% Draft	8/1/24	AE
60% Draft	11/18/24	AE
90% Draft	1/31/25	AE
Final	2/14/25	AE

Revision: Final
Plot Scale: 1:2
Drawn By: A.Eckhart, P.E.
Approved By: P.Montgomery, P.E.
Checked By: A.Eckhart, P.E.
Designed By: P.Montgomery, P.E.

Engineer
Anderson~Montgomery CONSULTING ENGINEERS
1064 N. Warren
Helena, MT 59601
Phone (406) 449-3303

Owner: City Of Missoula

Project Title: Garden City Compost Facility Improvements

Sheet Title: **Curing Bays Sections**

Sheet: **M-25**

X:\MISSOULA COMPOST\DESIGN\DRAWINGS\Sheets\7 - Mechanical\M-25 Curing Bays Sections.dwg SAVED: 2/7/25 PRINTED: 2/11/25 BY: ADAM

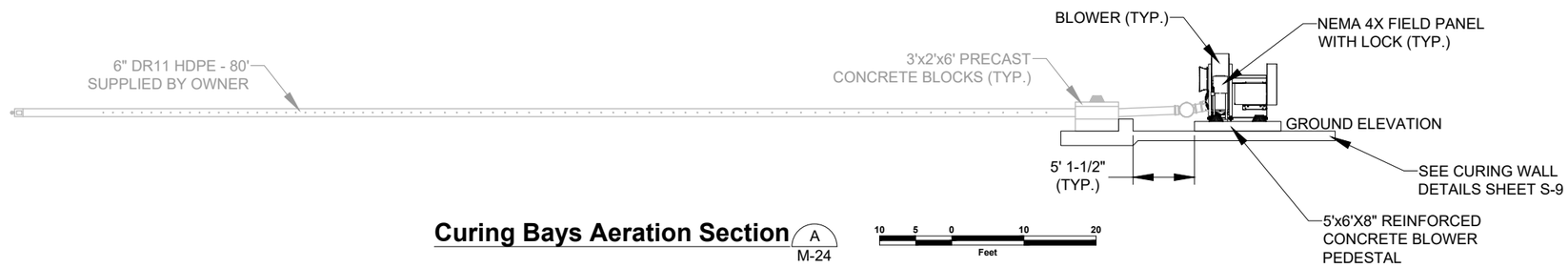

Curing Bays Aeration Section (A / M-24)

10 5 0 10 20
Feet

NOTE:
- PIPE CLAMPS WILL BE USED IN THE FOLLOWING CONNECTIONS: ALL SADDLES, THE FLEXIBLE PIPE, ALL FERNCO TEES, AND ALL FERNCO CAPS. ALL SADDLES REDUCING TO 10" WILL CONNECT TO A DAMPER AND ACTUATOR.
- OWNER SUPPLIED FROM THE TRANSITIONAL FACILITY

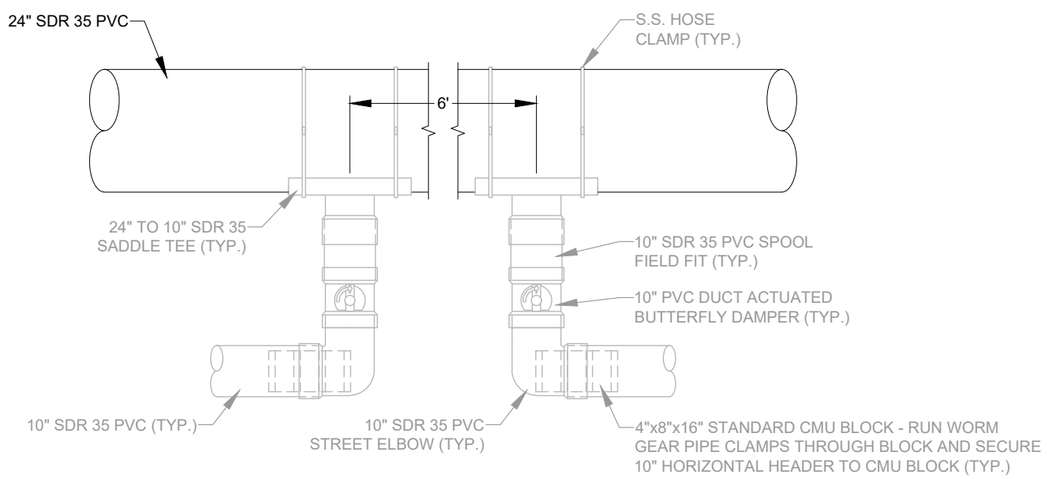

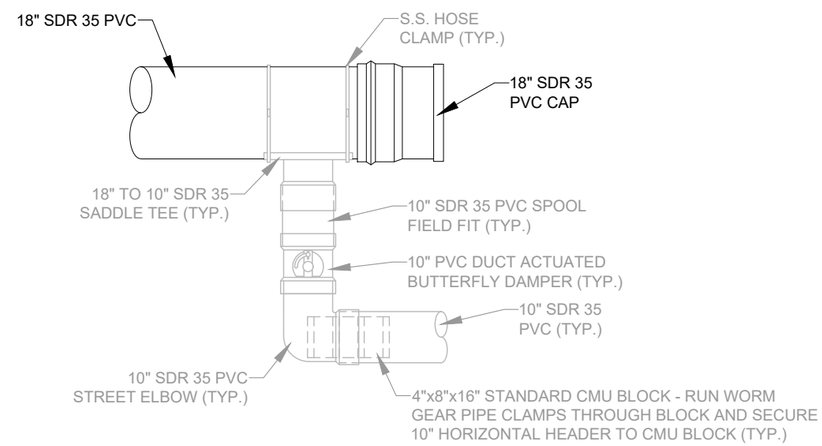

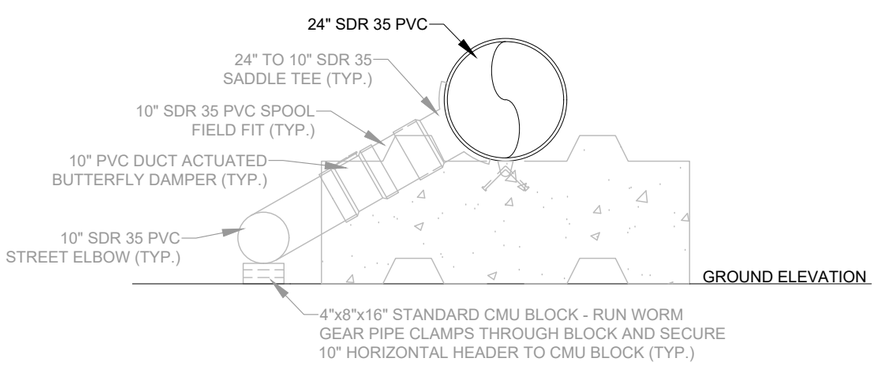

24" To 10" Damper Detail (1 / M-25)

NO SCALE

NOTE:
- FIELD FIT ANGLE OF SADDLES TO ALLOW PIPES TO SIT ON CONCRETE BLOCKS
- OWNER SUPPLIED FROM THE TRANSITIONAL FACILITY

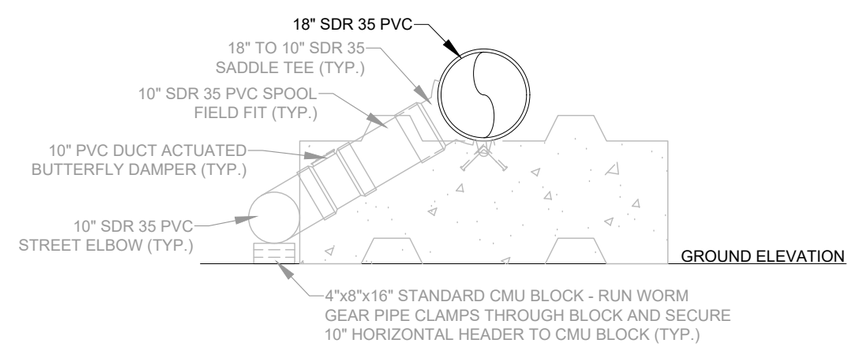

18" To 10" Damper Detail (2 / M-25)

NO SCALE

NOTE:
- FIELD FIT ANGLE OF SADDLES TO ALLOW PIPES TO SIT ON CONCRETE BLOCKS
- OWNER SUPPLIED FROM THE TRANSITIONAL FACILITY

Revision	Date	By
30% Draft	8/1/24	AE
60% Draft	11/18/24	AE
90% Draft	1/31/25	AE
Final	2/14/25	AE

Revision: Final
Plot Scale: 1:2
Drawn By: A.Eckhart, P.E.
Approved By: P.Montgomery, P.E.
Checked By: A.Eckhart, P.E.
Designed By: P.Montgomery, P.E.

Engineer:
Anderson~Montgomery CONSULTING ENGINEERS
1064 N. Warren
Helena, MT 59601
Phone (406) 449-3303

Owner: City Of Missoula

Project Title: Garden City Compost Facility Improvements

Sheet Title: **Curing Bays Section & Details**

Sheet: **M-26**

X:\MISSOULA COMPOST\DESIGN\DRAWINGS\Sheets\7 – Mechanical\M-26 Curing Bays Section & Details.dwg SAVED: 2/7/25 PRINTED: 2/11/25 BY: ADAM

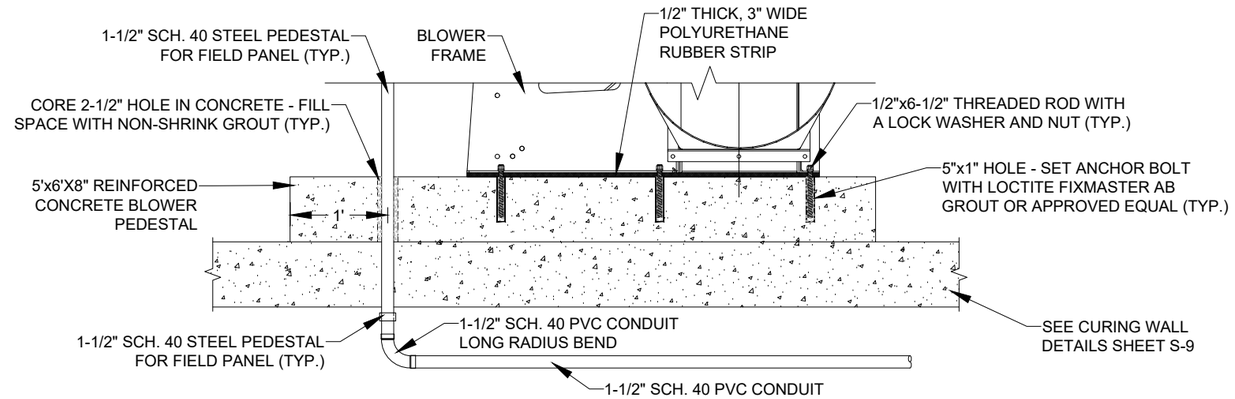

Curing Blower Mounting Detail (1 / M-27)

NO SCALE

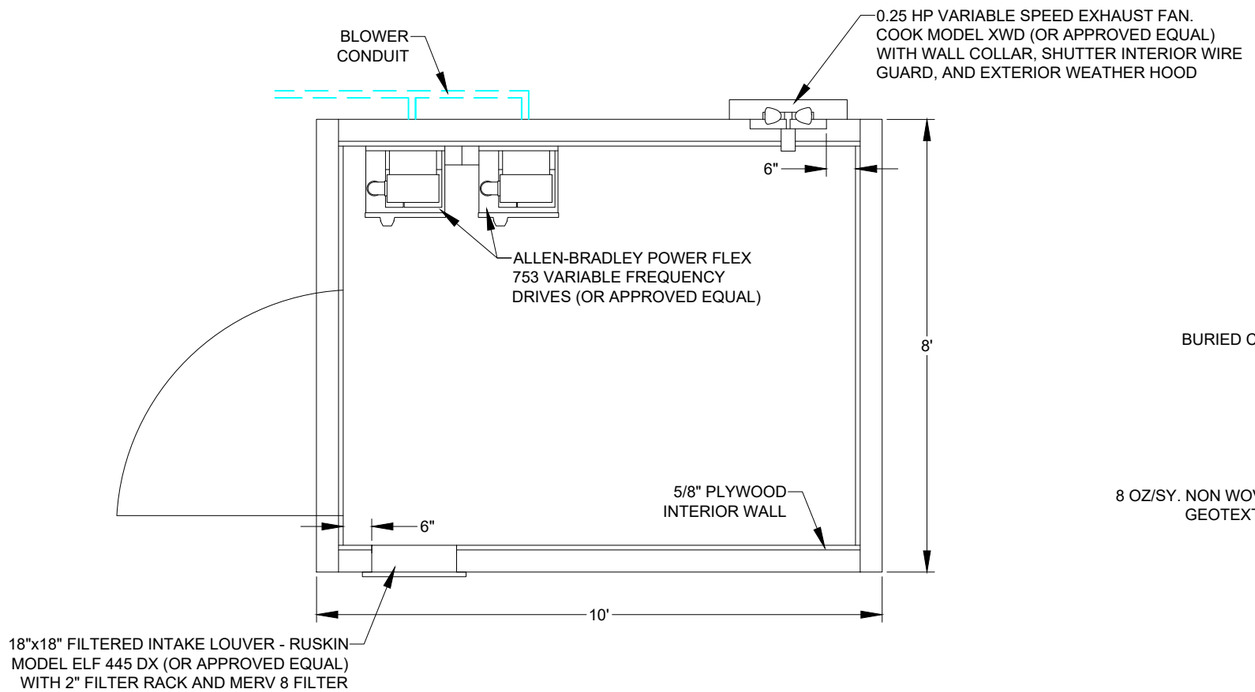

Control Shed Layout (2 / M-27)

NO SCALE

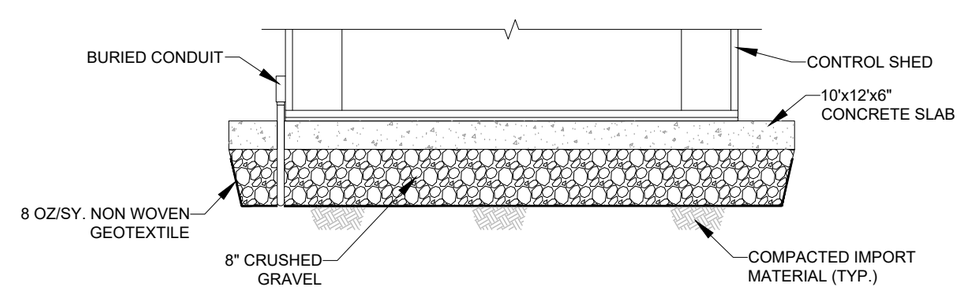

Control Shed Foundation (3 / M-27)

NO SCALE

Revision	Date	By
30% Draft	8/1/24	AE
60% Draft	11/18/24	AE
90% Draft	1/31/25	AE
Final	2/14/25	AE

Revision: Final
Plot Scale: 1:2
Drawn By: A.Eckhart, P.E.
Approved By: P.Montgomery, P.E.
Checked By: A.Eckhart, P.E.
Designed By: P.Montgomery, P.E.

Engineer
Anderson~Montgomery CONSULTING ENGINEERS
1064 N. Warren
Helena, MT 59601
Phone (406) 449-3303

Owner: City Of Missoula

Project Title: Garden City Compost Facility Improvements

Sheet Title: **Curing Blower & Control Shed Details**

Sheet: **M-27**

X:\MISSOULA COMPOST\DESIGN\DRAWINGS\Sheets\7 - Mechanical\M-27 Curing Blower & Control Shed Details.dwg SAVED: 2/3/25 PRINTED: 2/11/25 BY: ADAM

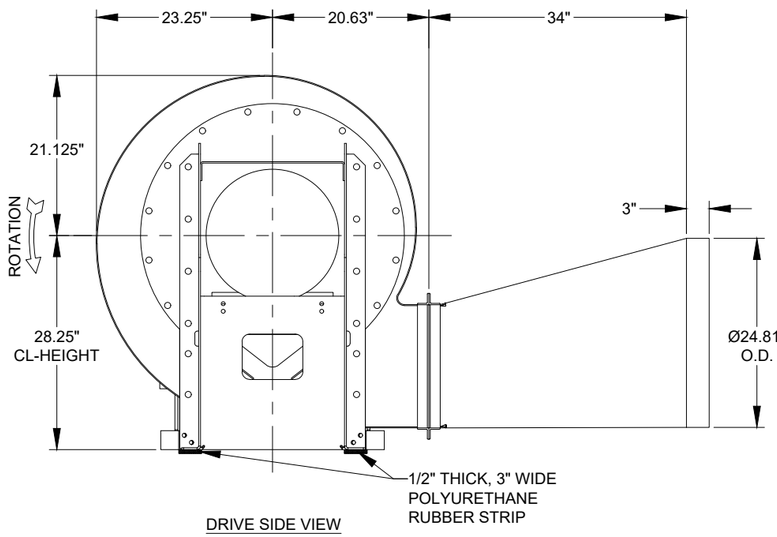

DRIVE SIDE VIEW

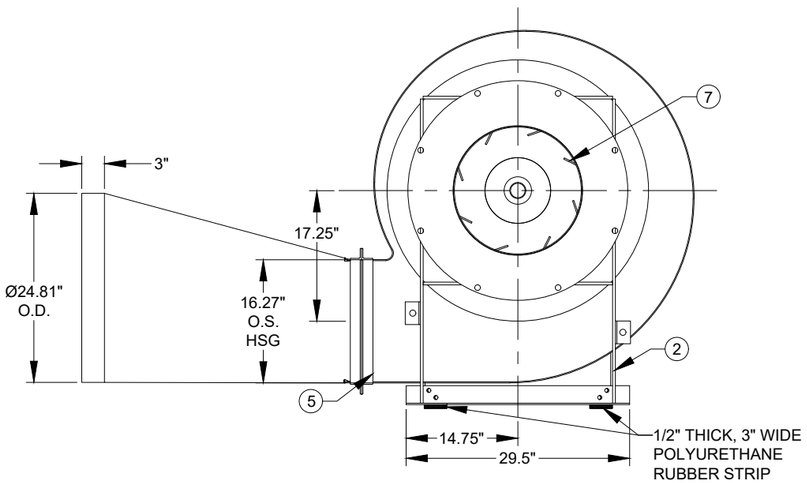

INLET SIDE VIEW

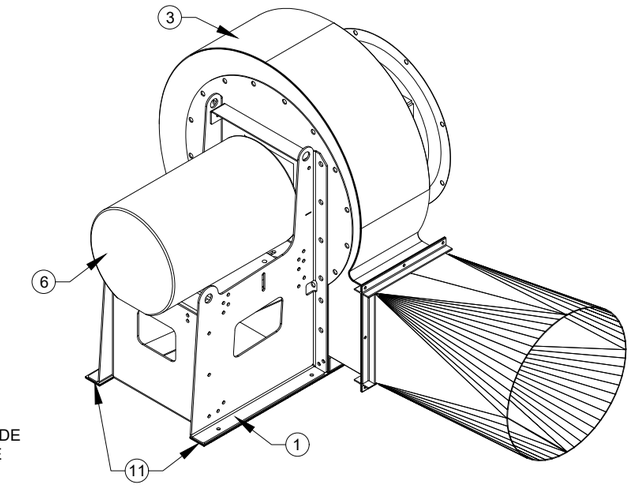

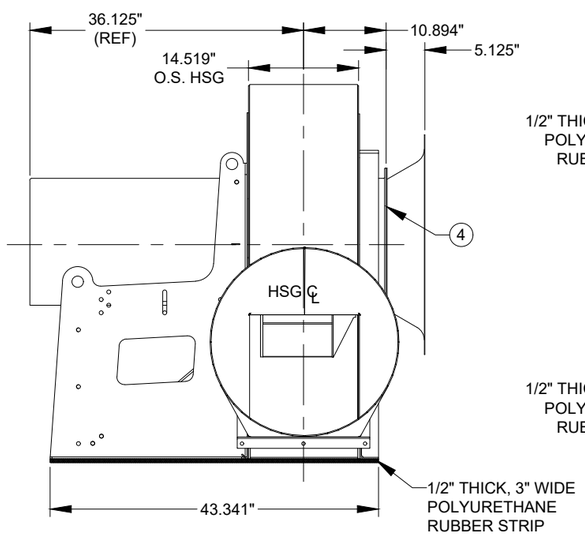

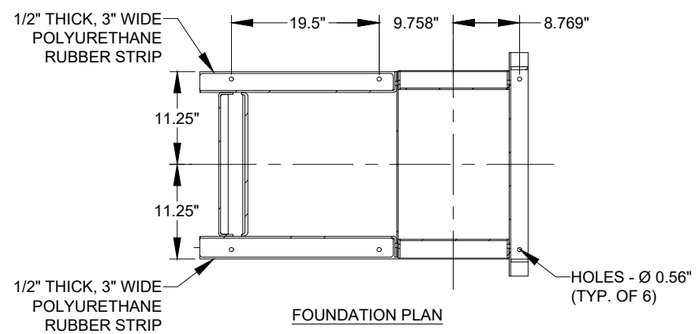

FOUNDATION PLAN

Item	Description	Qty.	Notes
1	Pedestal	1	
2	Frame	1	2.5"x2.5'x0.1875" Base Angle
3	Housing Assembly	1	HSG Side=10 GA, Scroll=10 GA
4	Bolted Inlet Flange	1	1.5"x1.5"x0.1875" Angle, Punched per Detail
5	Outlet Flange	1	1.5"x1.5"x0.1875" Angle, Punched per Detail
6	Motor	1	40 HP, 1800 RPM, 3/60/230-460V, TEFC-Premium, 324T Frame Furn & MTD by TCF (Shaft Grounding Ring)
7	Wheel	1	
8	Shaft Seal	1	STD Type
9	Outlet Transition	1	Fan Outlet to Ø24.80" Pipe (Mild Steel)
10	Inlet Bell Assembly, Bolt-on	1	With Inlet Screen
11	Polyurethane Rubber Strip	2	½" Thick, 3" Wide Strip Between Blower and Concrete when Mounted

Curing Blower Detail (1 / M-28)

NO SCALE

NOTE:
- BLOWERS FURNISHED BY OWNER, DRAWINGS PROVIDED FOR INFORMATIONAL PURPOSES ONLY.
- FOR MOUNTING ON CONCRETE SEE SHEET M-27

Revision	Date	By
30% Draft	8/1/24	AE
60% Draft	11/18/24	AE
90% Draft	1/31/25	AE
Final	2/14/25	AE

Revision: Final
Plot Scale: 1:2
Drawn By: A.Eckhart, P.E.
Approved By: P.Montgomery, P.E.
Checked By: A.Eckhart, P.E.
Designed By: P.Montgomery, P.E.

Engineer
Anderson~Montgomery
CONSULTING ENGINEERS
1064 N. Warren
Helena, MT 59601
Phone (406) 449-3303

Owner: City Of Missoula

Project Title: Garden City Compost Facility Improvements

Sheet Title: **Blower Details**

Sheet: **M-28**

X:\MISSOULA COMPOST\DESIGN\DRAWINGS\Sheets\7 – Mechanical\M-28 Curing Blower Details.dwg SAVED: 2/3/25 PRINTED: 2/11/25 BY: ADAM

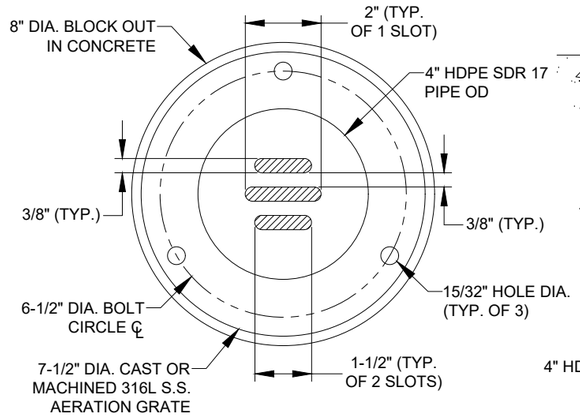

PLAN

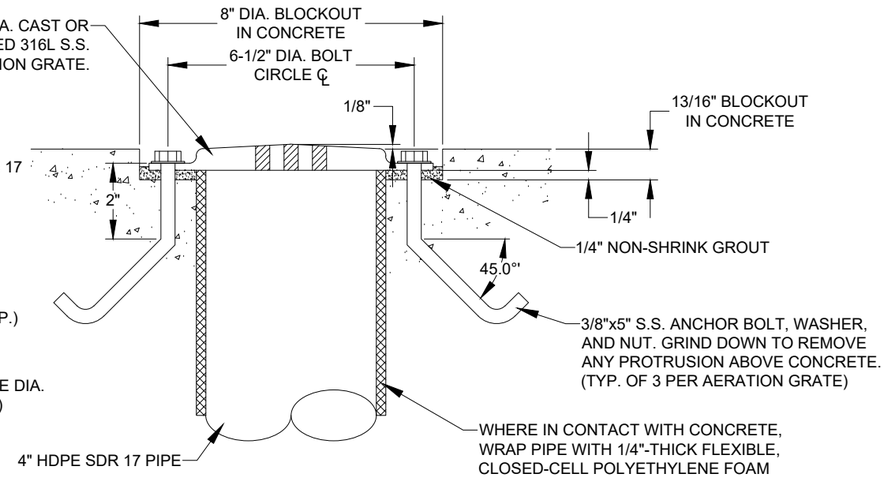

SECTION

NOTE:
AERATION GRATE SHALL BE SET LEVEL IN NON-SHRINK GROUT WITH A MAXIMUM OF 1/8" CROWN ABOVE THE PLANE OF TOP OF CONCRETE.

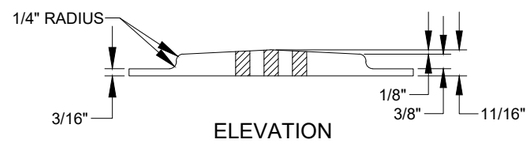

ELEVATION

Compost In-Floor Grate Detail (1 / M-2)

NO SCALE

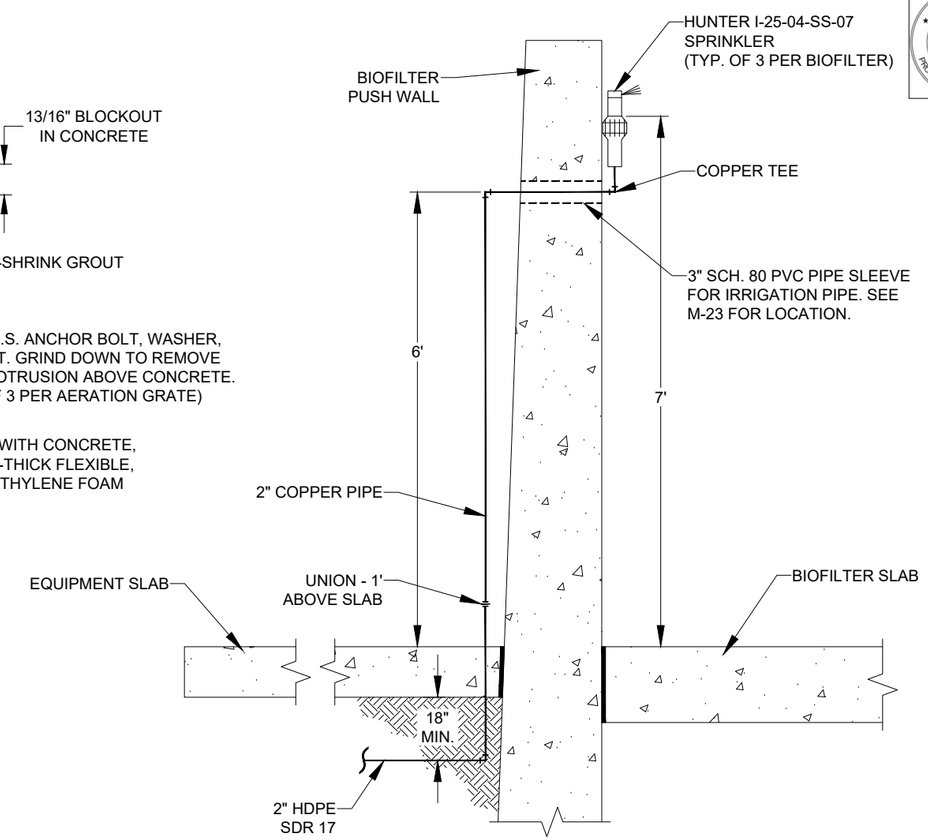

Biofilter Irrigation Sprinkler Anchoring (2 / M-23)

NO SCALE

NOTES:
- IRRIGATION PIPING SHALL HAVE A MINIMUM OF 18" BURIAL DEPTH.
- USE S.S. UNISTRUT, WASHERS, NUTS & BOLTS TO ANCHOR/SUPPORT COPPER IRRIGATION PIPING AND SPRINKLER HEADS ALONG THE CONCRETE WALLS. UNISTRUT SPACING SHALL BE A MAXIMUM OF 6', PIPING SHALL NOT SAG.
- SPRINKLER HEADS SHALL BE EQUIPPED WITH NOZZLE #07 (ORANGE) WITH SPECIFCATIONS OF 60 PSI WITH A 48' RADIUS AND 7.5 GPM.
- OWNER SHALL BE SUPPLIED WITH 2 SPARE SETS OF NOZZLES.
- HDPE PASSING THROUGH SLAB SHALL UTILIZE A PIPE SLEEVE SEE DETAIL (1 / CD-3)

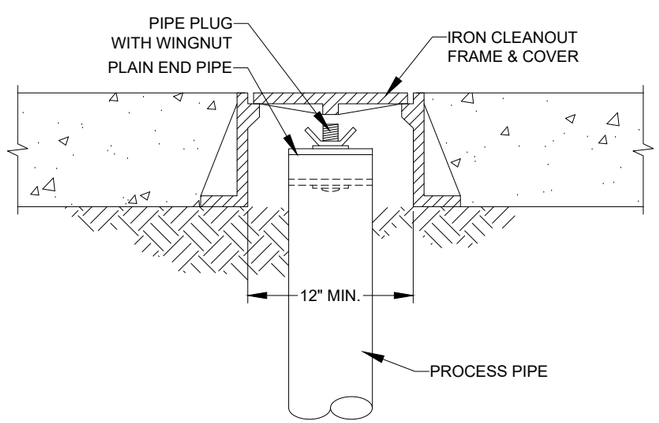

Slab On-Grade Clean Out (3 / ~)

NO SCALE

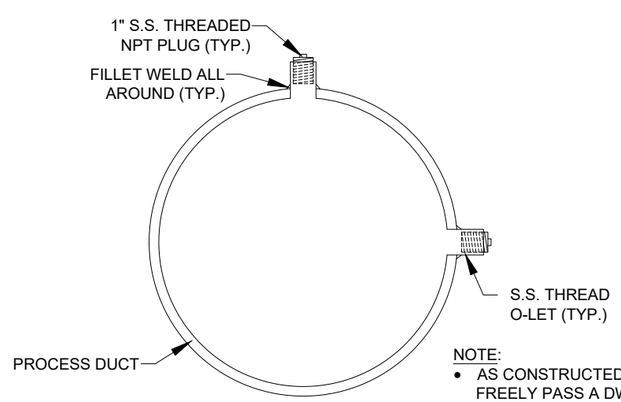

NOTE:
- AS CONSTRUCTED EACH PORT MUST BE ABLE TO FREELY PASS A DWYER SERIES 160 PITOT TUBE.

Foul Air Test Port Tap (4 / ~)

NO SCALE

MONTANA John R. Gedak NO. 72132PE 2/12/25 LICENSED PROFESSIONAL ENGINEER

Revision	Date	By
30% Draft	8/1/24	AE
60% Draft	11/18/24	AE
90% Draft	1/31/25	AE
Final	2/14/25	AE

Revision: Final
Plot Scale: 1:2
Drawn By: A.Eckhart, P.E.
Approved By: P.Montgomery, P.E.
Checked By: A.Eckhart, P.E.
Checked By: T.Williams, P.E.
Designed By: P.Montgomery, P.E.
Designed By: T.Pipher, P.E.

Engineer
Anderson~Montgomery CONSULTING ENGINEERS
1064 N. Warren
Helena, MT 59601
Phone (406) 449-3303

Jacobs
999 Main Street
STE. 1200
Boise, ID 83702
Phone (406) 212-4520

Owner: City Of Missoula

Project Title: Garden City Compost Facility Improvements

Sheet Title: **Details**

Sheet: **M-29**

X:\MISSOULA COMPOST\DESIGN\DRAWINGS\Sheets\7 – Mechanical\M-29 Details.dwg SAVED: 2/14/25 PRINTED: 2/19/25 BY: ADAM

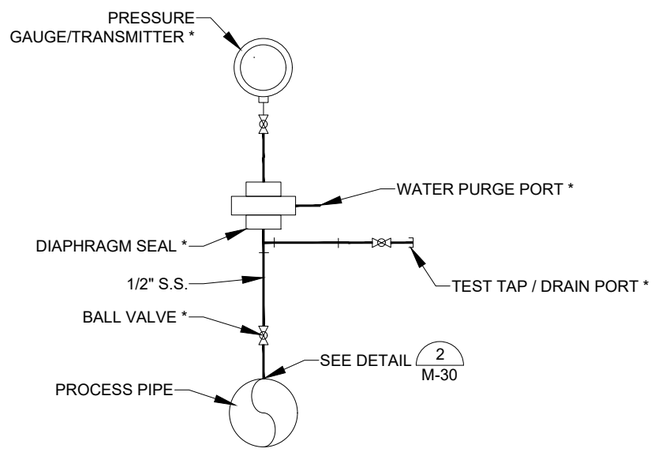

Pressure Instrument Installation - Diaphragm Seal (1)

NO SCALE

NOTES:

- COMPONENTS DESIGNATED WITH AN * ARE SUPPLIED BY THE INSTRUMENT MANUFACTURER.
- ADD THERMAL INSULATION FOR OUTDOOR INSTRUMENTS

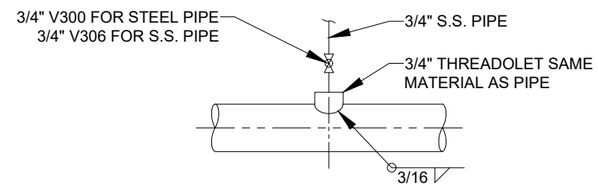

STEEL & S.S. DUCT 4" & LARGER

Pressure Connection Installation (2)

NO SCALE

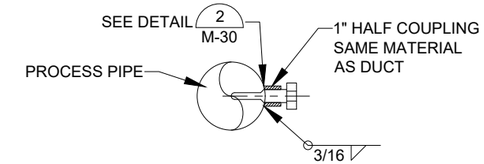

DUCT

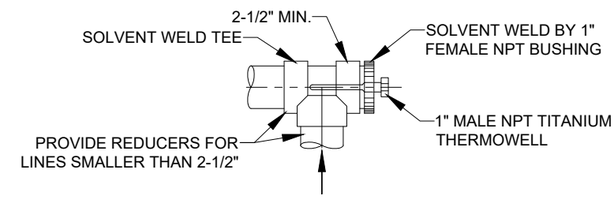

PVC & CPVC PIPE

Thermowell Installation (3)

NO SCALE

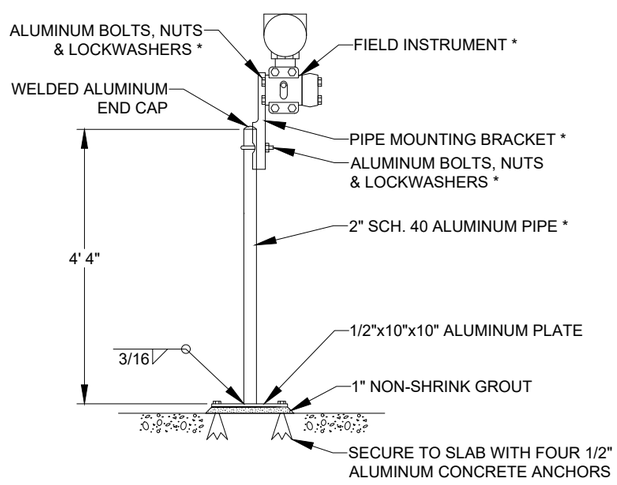

STANCHION MOUNT

Field Instrument Mounting - Stanchion (4)

NO SCALE

NOTES:

- COMPONENTS DESIGNATED WITH AN * ARE SUPPLIED BY THE INSTRUMENT MANUFACTURER.
- PAINT ALUMINUM IN CONTACT WITH CONCRETE ACCORDING TO SPECIFICATIONS FOR PAINTING.

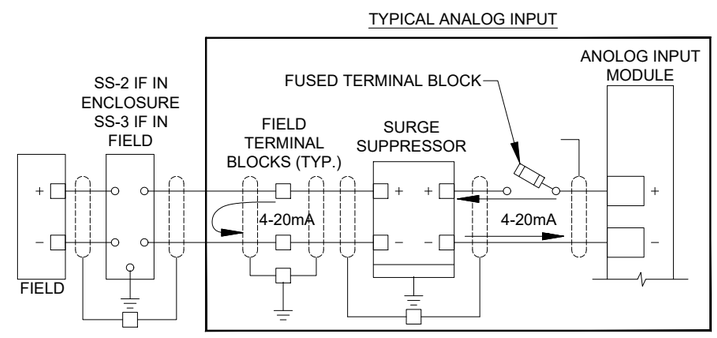

Type "SS-2" Surge Suppressor Wiring Diagram (5)

NO SCALE

MONTANA John R. Gedak NO. 72132PE 2/12/25 LICENSED PROFESSIONAL ENGINEER

Revision	Date	By
30% Draft	8/1/24	AE
60% Draft	11/18/24	AE
90% Draft	1/31/25	AE
Final	2/14/25	AE

Revision: Final
Plot Scale: 1:2
Drawn By: A.Eckhart, P.E.
Approved By: P.Montgomery, P.E.
Checked By: A.Eckhart, P.E.
Checked By: T.Williams, P.E.
Designed By: P.Montgomery, P.E.
Designed By: T.Pipher, P.E.

Engineer
Anderson~Montgomery CONSULTING ENGINEERS
1064 N. Warren
Helena, MT 59601
Phone (406) 449-3303

Jacobs
999 Main Street
STE. 1200
Boise, ID 83702
Phone (406) 212-4520

Owner: City Of Missoula

Project Title: Garden City Compost Facility Improvements

Sheet Title: **Instrument Details**

Sheet: **M-30**

X:\MISSOULA COMPOST\DESIGN\DRAWINGS\Sheets\7 - Mechanical\M-30 Instrument Details.dwg SAVED: 2/12/25 PRINTED: 2/14/25 BY: ADAM

ABBREVIATIONS:

ACI	American Concrete Institute
AISC	American Institute of Steel Construction
AISI	American Iron and Steel Institute
ANSI	American National Standards Institute
ASTM	ASTM International
ASD	Allowable stress design
AWS	American Welding Society
CRSI	Concrete Reinforcing Steel Institute
ICC	International Code Council
PCA	Portland Cement Association
WRI	Wire Reinforcement Institute
(E)	Existing
(N)	New
f'_c	Specified compressive strength of concrete, psi
f_y	Minimum specified yield strength of reinforcing steel, psi
psf	Pounds per square foot used for loads on building or reactions as from soil on footings
psi	Pounds per square inch used for stress or strength of concrete and reinforcing bars
kip	1000 pounds
ksi	Kips per square inch
C	American Standard Channels
HP	Bearing pile shapes
HSS	Hollow structural sections
L	Angles
M	Miscellaneous shapes
MC	Miscellaneous channels
MT	Structural tees from M-shapes
S	American Standard Beams
ST	Structural tees from S-shapes
TS	Structural tubing
W	Wide-flange shapes
WT	Structural tees from W-shapes
ADD'L	Additional
B, BOT	Bottom
BO, BOF	Bottom of, bottom of footing
CB	Catch basin, corner bar
CIP	Cast-in-place
CJ	Control joint
CL, CLR	Clear
CONC	Concrete
CONST	Construction
CONT	Continuous
CONTR JT	Contraction joint
CTR, CTRD	Center, centered
CY	Cubic yard
DIA	Diameter
DWG	Drawing
DWL	Dowel
EA	Each
EE	Each end
EF	Each face
EJ, EXP JT	Expansion joint
EL, ELEV	Elevation
EOR	Engineer on record
EQ	Equal
E.S.	Each side
EW	Each way
EXIST	Existing
EXP	Expansion
EXT	Extend, exterior
FDN, FNDN	Foundation
FIN	Finish
FT	Feet, foot
FTG	Footing
GALV	Galvanized
GC	General contractor
GR	Grade
H, HOR, HORIZ, HZ	Horizontal
ID	Inside diameter
IF	Inside face
IN	Inch, inches
JT	Joint
KIP	Thousand pounds
LB	Pound
LD	Development length of reinf. bar
LF	Linear feet
LIN	Linear
LONGIT	Longitudinal
MAX	Maximum
MIN	Minimum
MFR	Manufacturer
NIC	Not in contract
NO	Number
NOM	Nominal
NTS	Not to scale
OC	On center
OD	Outside diameter
OF	Outside face
OH	Opposite hand, overhang
OPNG	Opening
OPP	Opposite
PC	Precast
PCS	Pieces
PL	Plane bar, plate
PLCS	Places
PROJ	Project
P.A.	Preservative treated
PVMT	Pavement
QTY	Quantity
RC	Reinforced concrete
RD	Round
REBAR	Deformed reinforcing bar
REINF	Reinforcement
REQ	Require
REV	Revision
SC	Shotcrete
SCC	Shrinkage Compensating Concrete
SCD	See civil drawings
SCHED	Schedule
SE	Slab edge
SECT	Section
SF	Square feet, square footage
SIM	Similar
SM	Sheet metal
SMD	See mechanical drawings
SOG	Slab on ground
SPA	Space
SPCG	Spacing
SQ	Square
STD	Standard
STRUCT	Structural, structures
T	Top
TC, TOC	Top of concrete
TF, TOF	Top of footing
TO	Top of
TOP	Top of precast, top of pier
TOS	Top of slab, top of steel
TOW, TW	Top of wall
TRANSV	Transverse
TYP	Typical
UNO, UON	Unless noted otherwise
USO, UOS	Unless shown otherwise
V, VERT, VT	Vertical
VIF	Verify in field
WWF	Welded wire fabric
X-SECT	Cross section

00.00 - GENERAL:

1. WHERE THERE IS A CONFLICT BETWEEN THESE GENERAL STRUCTURAL NOTES AND A SPECIFIC REQUIREMENT IN THE PLANS AND DETAILS, THE SPECIFIC REQUIREMENT SHALL BE APPLICABLE. WHERE, IN ANY SPECIFIC CASE, DIFFERENT PORTIONS OF THESE DRAWINGS SPECIFY DIFFERENT MATERIALS, METHODS OF CONSTRUCTION OR OTHER REQUIREMENTS, THE MOST RESTRICTIVE SHALL GOVERN.
2. PROVISIONS OF A PROJECT MANUAL (SPECIFICATIONS) APPLY AND THE MORE RESTRICTIVE SPECIFICATION BETWEEN THESE DRAWINGS AND THE PROJECT MANUAL SHALL APPLY.
3. ALL OMISSIONS OR CONFLICTS, INCLUDING DIMENSIONS, BETWEEN THE VARIOUS ELEMENTS OF THE CONSULTANTS' DRAWINGS AND/OR SPECIFICATIONS SHALL BE BROUGHT TO THE ATTENTION OF THE ENGINEER BEFORE PROCEEDING WITH ANY WORK INVOLVED.
4. THE STRUCTURAL DRAWINGS SHALL BE USED IN CONJUNCTION WITH THE CIVIL AND MEP DRAWINGS. PRIMARY STRUCTURAL ELEMENTS AND OVERALL STRUCTURAL LAYOUT ARE INDICATED WITH THE STRUCTURAL PLANS AND DETAILS. SOME SECONDARY ELEMENTS, LAYOUTS, ELEVATIONS, SLOPES, DEPRESSIONS, CURBS, MECHANICAL EQUIPMENT AND ELECTRICAL EQUIPMENT, ARE NOT INDICATED WITH THE STRUCTURAL DRAWINGS. DETAILING AND SHOP DRAWING PRODUCTION FOR THE STRUCTURAL ELEMENTS WILL REQUIRE INFORMATION (INCLUDING DIMENSIONS) CONTAINED IN THE CIVIL, STRUCTURAL, AND MEP DRAWINGS.
5. DO NOT SCALE THESE DRAWINGS, USE THE DIMENSIONS SHOWN.
6. NO STRUCTURAL MODIFICATIONS, ALTERATIONS, OR REPAIRS SHALL BE MADE WITHOUT PRIOR REVIEW BY THE STRUCTURAL ENGINEER.
7. THE CONTRACTOR SHALL BE RESPONSIBLE FOR THE MEANS, METHODS AND SAFETY OF ERECTION OF THE STRUCTURE, AND SHALL PROVIDE TEMPORARY SHORING AND BRACING AS THE CONTRACTOR'S METHOD REQUIRES TO PROVIDE ADEQUATE VERTICAL AND LATERAL SUPPORT. TEMPORARY SHORING AND BRACING SHALL REMAIN IN PLACE AS THE CHOSEN METHOD REQUIRES UNTIL ALL PERMANENT MEMBERS ARE IN PLACE AND ALL FINAL CONNECTIONS ARE COMPLETED. THE BUILDING SHALL NOT BE CONSIDERED STABLE UNTIL ALL CONNECTIONS ARE COMPLETE.
8. THE CONTRACTOR IS SOLELY RESPONSIBLE FOR ALL SAFETY REGULATIONS, PROGRAMS AND PRECAUTIONS RELATED TO ALL WORK ON THIS PROJECT.
9. THE CONTRACTOR IS SOLELY RESPONSIBLE FOR THE PROTECTION OF PERSONS AND PROPERTY EITHER ON OR ADJACENT TO THE PROJECT AND SHALL PROTECT IT AGAINST INJURY, DAMAGE, OR LOSS.

01.00 - BASIS OF DESIGN:

1. GOVERNING CODES:
   A. ASCE 7-16 MINIMUM DESIGN LOADS FOR BUILDINGS & OTHER STRUCTURES.
2. RISK CATEGORY: I [ ], II [X], III [ ], IV [ ]
3. DEAD LOADS:
   A. STRUCTURE SELF-WEIGHT
4. LIVE LOADS:
   A. CONCRETE SLABS-ON-GRADE:
      a. 16.5 KIP WHEEL LOAD FROM CASE 921G FRONT END LOADER
      b. AASHTO HL-93 DUAL TANDEM
      c. 400 PSF COMPOST STORAGE
5. EARTHQUAKE DESIGN DATA:
   - MAPPED SPECTRAL RESPONSE ACCELERATION, S_S=0.44 AND S_1=0.13
   - SITE CLASS: A [ ], B [ ], C [ ], D [X], E [ ], F [ ]
   - DESIGN SPECTRAL RESPONSE ACCELERATION, S_{DS}=0.41 AND S_{D1}=0.23
6. GEOTECHNICAL DATA:
   A. SOURCE: GEOTECHNICAL INVESTIGATION AND REPORT WAS PROVIDED FOR, BY PIONEER TECHNICAL SERVICES, REPORT TITLE, "GARDEN CITY COMPOST GEOTECHNICAL REPORT", DATED FEB. 9, 2024.
   B. SOIL BEARING PRESSURE (ASD): 3,000 PSF (STRUCTURAL FILL)
   C. COEFFICIENT OF FRICTION: 0.5
   D. EQUIVALENT FLUID PRESSURE:
      1. ACTIVE CASE: 38 PSF/FT
      2. AT REST CASE: 60 PSF/FT
      3. PASSIVE CASE: 480 PSF/FT
   E. ONE-THIRD STRESS INCREASE FOR WIND OR EARTHQUAKE LOADS

01.14 - SPECIAL INSPECTION:

1. SPECIAL INSPECTIONS SHALL BE COMPLETED.
2. REPORT REQUIREMENT: SPECIAL INSPECTORS SHALL KEEP RECORDS OF INSPECTIONS. THE SPECIAL INSPECTOR SHALL FURNISH INSPECTION REPORTS TO THE REGISTERED DESIGN PROFESSIONAL IN RESPONSIBLE CHARGE. REPORTS SHALL INDICATE THAT WORK INSPECTED WAS OR WAS NOT COMPLETED IN CONFORMANCE TO APPROVED CONSTRUCTION DOCUMENTS. DISCREPANCIES SHALL BE BROUGHT TO THE IMMEDIATE ATTENTION OF THE CONTRACTOR FOR CORRECTION. IF THEY ARE NOT CORRECTED, THE DISCREPANCIES SHALL BE BROUGHT TO THE ATTENTION OF THE REGISTERED DESIGN PROFESSIONAL IN RESPONSIBLE CHARGE PRIOR TO THE COMPLETION OF THAT PHASE OF THE WORK.
3. STATEMENT OF SPECIAL INSPECTION - THE FOLLOWING SECTIONS IDENTIFY THE REQUIRED MATERIALS, SYSTEMS, COMPONENTS AND WORK TO BE SPECIAL INSPECTED AND TESTED:
   A. SOILS

VERIFICATION AND INSPECTION TASK	CONTINUOUS DURING TASK LISTED	PERIODICALLY DURING TASK LISTED
1. VERIFY THE MATERIALS BELOW SLABS AND FOUNDATIONS ARE ADEQUATE TO ACHIEVE THE DESIGN BEARING CAPACITY.	-	X
2. VERIFY EXCAVATIONS ARE EXTENDED TO PROPER DEPTH AND REACH PROPER MATERIAL.	-	X
3. PERFORM CLASSIFICATION AND TESTING OF COMPACTED FILL MATERIALS.	-	X
4. VERIFY USE OF PROPER MATERIALS, DENSITIES AND LIFT THICKNESSES DURING PLACEMENT AND COMPACTION OF COMPACTED FILL.	X	-
2. PRIOR TO PLACEMENT OF COMPACTED FILL, OBSERVE SUBGRADE AND VERIFY THAT SITE HAS BEEN PREPARED PROPERLY.	-	X

B. CONCRETE:

VERIFICATION AND INSPECTION TASK	CONTINUOUS	PERIODIC
1. INSPECTION OF REINFORCING STEEL, INCLUDING PRESTRESSING TENDONS, AND PLACEMENT.	-	X
2. INSPECTION OF REINFORCING STEEL WELDING IN ACCORDANCE WITH TABLE 1705.2.2, ITEM 2b.	-	-
3. INSPECTION OF ANCHORS CAST IN CONCRETE WHERE ALLOWABLE LOADS HAVE BEEN INCREASED OR WHERE STRENGTH DESIGN IS USED.	-	X
4. VERIFYING USE OF REQUIRED MIX DESIGN.	-	X

MONTANA
TYLER R. JIRGES
No. 87469 PE
LICENSED PROFESSIONAL ENGINEER

Revision	Date	By
30% Draft	8/1/24	AE
60% Draft	11/18/24	AE
90% Draft	1/31/25	AE
Final	2/14/25	AE

Revision: Final
Plot Scale: 1:2
Drawn By: A. Eckhart, P.E.
Drawn By: E. Swanson
Approved By: Matt Miller, P.E.
Checked By: Tyler Jirges, P.E.
Designed By: Tyler Jirges, P.E.

Engineer
Anderson~Montgomery CONSULTING ENGINEERS
1064 N. Warren
Helena, MT 59601
Phone (406) 449-3303

RPA
602 S. Ferguson Ave. STE 5
Bozeman, MT 59718
Phone (406) 284-2110

Owner: City Of Missoula

Project Title: Garden City Compost Facility Improvements

Sheet Title: **Structural Notes**

Sheet: **S-1**

X:\MISSOULA COMPOST\DESIGN\DRAWINGS\Sheets\8 - Structural\S-1 & S-2 Structural Notes.dwg SAVED: 2/17/25 PRINTED: 2/18/25 BY: ADAM

03.30 CAST-IN-PLACE:

1. CONCRETE CONSTRUCTION & MATERIALS SHALL COMPLY WITH THE STANDARDS SPECIFIED IN AMERICAN CONCRETE INSTITUTE ACI 350-20, "CODE REQUIREMENTS FOR ENVIRONMENTAL ENGINEERING CONCRETE STRUCTURES".
2. CONCRETE STRENGTH DESIGN REQUIREMENTS SHALL BE AS FOLLOWS:

CONCRETE MIX DESIGNS

COMPONENT	f'c at 28 Days (psi)	Max w/cm Ratio	Air Content (%)	Max Aggregate Size	Exposure Classes*		
					F	S	C
Footings	4500	0.45	4.5	1	EF1	ES0	EC0
Foundation Walls/Push Walls	4500	0.42	6	1	EF2	ES1	EC2
Slab-on-grade	4500	0.42	3	1	EF2	ES1	EC2

SEE SPEC. SECTION 03 30 00 AND 03 31 19 FOR MIX DESIGN REQUIREMENTS.

3. REINFORCEMENT MATERIALS
   A. DEFORMED REINFORCING BARS SHALL CONFORM TO:
      a. ASTM A615 - STANDARD REINFORCING, GRADE 60; GRADE 40 SHALL BE ALLOWED FOR #3 AND SMALLER BARS
      b. ASTM A706 - REINFORCING TO BE WELDED, GRADE 60
5. CONSTRUCTION REQUIREMENTS
   A. LOCATION OF CONSTRUCTION JOINTS NOT SHOWN ON THE DRAWINGS SHALL BE APPROVED BY THE ENGINEER. CONSTRUCTION JOINTS SHALL NOT BE PLACED AT LOCATION OTHER THAN THOSE SHOWN ON DRAWINGS UNLESS PRIOR WRITTEN APPROVAL IS OBTAINED FROM THE ENGINEER.
   B. FINISH ALL CONCRETE IN ACCORDANCE WITH SPEC. SECTION 03 30 00.
   C. REINFORCING BARS SHALL NOT BE WELDED UNLESS SPECIFICALLY SHOWN ON DRAWINGS.
   D. FIELD BENDING OF REINFORCEMENT PARTIALLY EMBEDDED IN CONCRETE SHALL NOT BE PERMITTED, EXCEPT AS SHOWN IN THE CONSTRUCTION DOCUMENTS.
   E. OFFSET BARS SHALL BE BENT BEFORE PLACEMENT IN THE FORMS.
   F. ALL REINFORCEMENT SHALL BE BENT COLD, AND SHALL BE BENT ONLY ONCE AT THE SAME LOCATION. ALL REINFORCEMENT SHALL BE SHOP BENT, UNLESS OTHERWISE PERMITTED BY THE EOR.
   G. CONCRETE COVER FOR CAST-IN-PLACE NONPRESTRESSED CONCRETE MEMBERS.
      a. CAST AGAINST AND PERMANENTLY IN CONTACT WITH GROUND: COVER = 3"
      b. FORMED CONCRETE EXPOSTED TO EARTH, LIQUID, WEATHER OR BEARING ON WORK MAT OR SLABS SUPPORTING EARTH COVER:
         SLABS - COVER = 2"
         WALLS - COVER = 2"
         FOOTINGS AND BASE SLABS:
            FORMED SURFACES - COVER = 2"
            TOP OF FOOTING AND BASE SLABS - COVER = 2"
      c. CONDITIONS NOT COVERED BY "a" OR "b" SECTION PREVIOUSLY:
         SLABS, JOISTS, & WALLS:
            No. 11 BAR & SMALLER - COVER = 3/4"
            No. 14 & No. 18 BARS - COVER = 1-1/2"
         BEAMS, COLUMNS:
            STIRRUPS, TIES, SPIRALS, HOOPS - COVER = 1-1/2"
            PRIMARY REINF. - COVER = 2"
   H. REINFORCING SHALL BE ACCURATELY FORMED TO DIMENSIONS INDICATED IN DRAWINGS AND PER BENDING DETAILS- SEE DETAIL 1/S-6.
   I. NO SPLICING SHALL BE PERMITTED EXCEPT AS NOTED ON DRAWINGS. WHERE PERMITTED SPLICES MAY BE MADE BY CONTACT LAPS - SEE LAP SCHEDULE 2/S-6.

03.30 CAST-IN-PLACE CONTINUED:

6. PLACEMENT TOLERANCE
   a. PLACEMENT OF NONPRESTRESSED REINFORCEMENT
      - WHEN MEMBER DEPTH (OR THICKNESS) IS 4" OR LESS: ±1/4"
      - WHEN MEMBER DEPTH (OR THICKNESS) IS OVER 4" AND NOT OVER 12": ±3/8"
      - WHEN MEMBER DEPTH (OR THICKNESS) IS OVER 12": ±1/2"
   b. CONCRETE COVER MEASURED PERPENDICULAR TO CONCRETE SURFACE
      - WHEN MEMEBER DEPTH (OR THICKNESS) IS 12" OR LESS: -3/8"
      - WHEN MEMEBER DEPTH (OR THICKNESS) IS OVER 12": -1/2"
      - REDUCTION IN COVER SHALL NOT EXCEED 1/3 THE SPECIFIED CONCRETE COVER
      - REDUCTION IN COVER TO FORMED SOFFITS SHALL NOT EXCEED 1/4"
   c. VERTICAL DEVIATION FOR SLAB-ON-GROUND REINFORCEMENT: ±3/4"
   d. CLEARANCE BETWEEN REINFORCEMENT OR BETWEEN REINFORCEMENT AND EMBEDMENT
      - ONE-QUARTER SPECIFIED DISTANCE NOT TO EXCEED: ±1"
      - DISTANCE BETWEEN REINFORCEMENT SHALL NOT BE LESS THAN THE GREATER OF THE BAR DIAMETER OR 1" FOR UNBUNDLED BARS
      - FOR BUNDLED BARS, THE DISTANCE BETWEEN BUNDLES SHALL NOT BE LESS THAN THE GREATER OF 1" OR A BAR DIAMETER DERIVED FROM THE EQUIVALENT TOTAL AREA OF ALL BARS IN THE BUNDLE
   e. SPACING OF NONPRESTRESSED REINFORCEMENT, MEASURED ALONG A LINE PARALLEL TO THE SPECIFIED SPACING
      - EXCEPT AS NOTED BELOW: ±3"
      - STIRRUPS, THE LESSOR OF ±3" OR ±1" PER FT OF BEAM DEPTH
      - TIES, THE LESSER OF ±3" OR ±1" PER FT OF LEAST COLUMN WIDTH
      - THE TOTAL NUMBER OFBARS SHALL NOT BE FEWER THAN THAT SPECIFIED
   f. LONGITUDINAL LOCATION OF BENDS IN BARS AND ENDS OF BARS
      - AT DISCONTINUOUS ENDS OF CORBELS AND BRACKETS: ±1/2"
      - AT DISCONTINUOUS ENDS OF OTHER ELEMENTS: ±1"
      - AT OTHER LOCATIONS: ±2"
   g. EMBEDDED LENGTH OF BARS AND LENGTH OF BAR LAPS
      - #3 THROUGH #11 BAR SIZES: -1"
      - #14 AND #18 BARS: -2"
   h. PLACEMENT OF SMOOTH ROD OR PLATE DOWELS IN SLAB-ON-GROUND
      - CENTERLINE OF DOWEL, VERTICAL DEVIATION MEASURED FROM BOTTOM OF CONCRETE SLAB AT THE JOINT FOR ELEMENT DEPTH 8" OR LESS: ±1/2" WHEN ELEMENT DEPTH IS OVER 8": ±1"
      - SPACING OF DOWELS, MEASURED ALONG A LINE PARALLEL TO THAT SPECIFIED SPACING: ±3"
      - THE TOTAL NUMBER OF DOWELS SHALL NOT BE FEWER THAN THAT SPECIFIED
      - CENTERLINE OF DOWEL WITH RESPECT TO A HORIZONTAL LINE THAT IS PERPENDICULAR TO THE PLANE ESTABLISHED BY THE JOINT
        1. HORIZONTAL DEVIATION: ±1/2"
        2. VERTICAL DEVIATION: ±1/2"
   i. ANCHOR BOLTS IN CONCRETE
      - TOP OF ANCHOR BOLTS SPECIFIED ELEVATION
        1. VERTICAL DEVIATION: ±1/2"
      - CENTERLINE OF INDIVIDUAL ANCHOR BOLTS FROM SPECIFIED LOCATION
        1. HORIZONTAL DEVIATION
           A. FOR 3/4" AND 7/8" BOLTS: ±1/4"
           B. FOR 1", 1-1/4" AND 1-1/2" BOLTS: ±3/8"
           C. FOR 1-3/4", 2", AND 2-1/2" BOLTS: ±1/2"

05.05 19 POST-INSTALLED ANCHORS:

1. POST-INSTALLED ANCHORS IN CONCRETE SHALL BE IN ACCORDANCE WITH THESE NOTES UNLESS NOTED DIFFERENTLY IN PLANS AND DETAILS. SEE PLANS AND DETAILS FOR ANCHOR TYPE, SIZE, AND SPACING. POST-INSTALLED ANCHORS SHALL NOT BE USED IN PLACE OF SPECIFIED CAST-IN-PLACE ANCHORS SPECIFIED IN DRAWINGS, UNLESS SPECIFIED IN PLANS OR DETAILS, OR WRITTEN APPROVAL BY ENGINEER OF RECORD.
2. QUALITY ASSURANCE: INSTALLER FOR DRILLED-IN ANCHORS SHALL HAVE AT LEAST (3) YEARS OF EXPERIENCE PERFORMING SIMILAR INSTALLATIONS.
3. STORE ANCHORS AND INJECTION ADHESIVE IN ACCORDANCE WITH MANUFACTURER'S RECOMMENDATIONS.
4. INSTALLATION OF POST-INSTALL ANCHORS SHALL BE IN ACCORDANCE WITH MANUFACTURER'S WRITTEN INSTRUCTIONS.
5. ADHESIVE ANCHORS SHALL BE INSTALLED IN CONCRETE HAVING A MINIMUM AGE OF 21 DAYS AT TIME OF ANCHOR INSTALLATION. FOR INSTALLATIONS SOONER THAN 21 DAYS CONSULT ADHESIVE MANUFACTURER.
6. EXISTING REINFORCING SHALL NOT BE DAMAGED DURING INSTALLATION OF ANCHOR.
7. ALL MISDRILLED OR UNACCEPTABLE HOLES SHALL NOT BE USED.
8. REMOVE AND REPLACE MISPLACED OR MALFUNCTIONING ANCHORS. FILL EMPTY ANCHOR HOLES AND PATCH FAILED ANCHOR LOCATIONS WITH HIGH-STRENGTH NON-SHRINK GROUT.

05.05 FABRICATED METAL WORK:

1. STEEL SHAPES SHALL CONFORM TO THE FOLLOWING MATERIAL GRADES:
   A. MISC SHAPES INCLUDING
   B. EMBED PLATS, EMBED ANGLES, ETC: ASTM A36
   C. ASCE RAIL: 55Q
   D. PUSH WALL PLATES AT BIOSOLIDS AND PRE-COMPOST MIXING BINS: A400
2. BOLTS SHALL BE HIGH STRENGTH BOLTS CONFORMING TO THE FOLLOWING ASTM STANDARDS EXPECT WHERE NOTED OTHERWISE:
   A. UNLESS NOTED OTHERWISE: A325-N
   B. MACHINE BOLTS (MB) AND ANCHOR BOLTS (AB)
      a. STAINLESS STEEL MB AND AB: F593, TYPE 316
      b. STEEL MB: A307
      c. STEEL AB: F1554, GRADE 55
3. ITEMS EMBEDDED IN CONCRETE SHALL BE CLEAN AND FREE OF OIL, DIRT, AND PAINT.

31.00 EARTHWORK:

1. THE FOUNDATION DESIGN IS BASED UPON GEOTECHNICAL RECOMMENDATIONS CONTAINED IN THE REPORT, "GARDEN CITY COMPOST GEOTECHNICAL REPORT", BY "PIONEER GEOTECHNICAL SERVICES", DATED FEB. 9, 2024. RECOMMENDATIONS PROVIDED BY THIS REPORT SHALL BE FOLLOWED IN ADDITION TO SPECIFICATIONS IN DIVISIONS 31 & 32 AND DETAILS IN DRAWINGS.
2. REGISTERED PROFESSIONAL GEOTECHNICAL ENGINEER SHALL JUDGE SUITABILITY OF UNDERLYING MATERIAL TO SUPPORT FOUNDATIONS AND SHALL APPROVE BEARING MATERIAL BEFORE FOUNDATION INSTALLATION.
3. ALL FILL MATERIALS SHALL BE COMPACTED IN ACCORDANCE WITH RECOMMENDATIONS OF GEOTECHNICAL REPORT, WHEN PRODUCED FOR THE PROJECT, BUT NOT LESS THAN THE FOLLOWING:
   A. STRUCTURAL FILL: 95% OF *MAX DRY DENSITY.
   B. SOILS BENEATH SLABS: 95% OF *MAX DRY DENSITY
   C. BACKFILL: 95% OF *MAX DRY DENSITY
      *ASTM D698 STANDARD PROCTOR
4. ALL FOOTINGS/SLABS SHALL BEAR ON COMPACTED STRUCTURAL FILL, WHICH IS IN TURN SUPPORTED BY FIRM NATIVE SOIL SUBGRADE (POORLY GRADED GRAVELS WITH SAND AND COBBLES).
5. ALL PERIMETER FOOTINGS AND EXTERIOR FOOTINGS SHALL BEAR A MINIMUM OF 42IN BELOW FINISH GRADE, U.N.O.
6. CONTRACTOR IS RESPONSIBLE FOR THE SAFETY OF EXCAVATIONS, PROTECTION OF EXISTING UTILITIES AND STRUCTURES, ETC. WHETHER INDICATED OR NOT.
7. CONTRACTOR SHALL PROVIDE CONTINUOUS SITE DRAINAGE BY A MECHANICAL METHOD TO CONTROL SURFACE AND UNDERGROUND WATER AS REQUIRED TO MAINTAIN A DRY WORKING SITE.
8. COORDINATE UNDER GROUND UTILITIES AND PIPING WITH MECHANICAL, PLUMBING AND CIVIL DRAWINGS.
9. THE TOP SURFACE OF FOOTINGS SHALL BE LEVEL.
10. PLACE BACKFILL AT EQUAL HEIGHT LIFTS EACH SIDE OF BURIED WALLS TO PREVENT UNBALANCED EARTH PRESSURES ACTING ON WALL.
11. DO NOT BACKFILL EARTH RETAINING WALLS UNTIL SPECIFIED STRENGTH IS ATTAINED.

MONTANA
TYLER R. JIRGES
No. 87469 PE
LICENSED PROFESSIONAL ENGINEER

Revision	Date	By
30% Draft	8/1/24	AE
60% Draft	11/18/24	AE
90% Draft	1/31/25	AE
Final	2/14/25	AE

Revision: Final
Plot Scale: 1:2
Drawn By: A. Eckhart, P.E.
Drawn By: E. Swanson
Approved By: Matt Miller, P.E.
Checked By: Tyler Jirges, P.E.
Designed By: Tyler Jirges, P.E.

Engineer
Anderson~Montgomery CONSULTING ENGINEERS
1064 N. Warren
Helena, MT 59601
Phone (406) 449-3303
RPA
602 S. Ferguson Ave. STE 5
Bozeman, MT 59718
Phone (406) 284-2110

Owner: City Of Missoula

Project Title: Garden City Compost Facility Improvements

Sheet Title: **Structural Notes Continued**

Sheet: **S-2**

X:\MISSOULA COMPOST\DESIGN\DRAWINGS\Sheets\8 - Structural\S-1 & S-2 Structural Notes.dwg SAVED: 2/17/25 PRINTED: 2/18/25 BY: ADAM

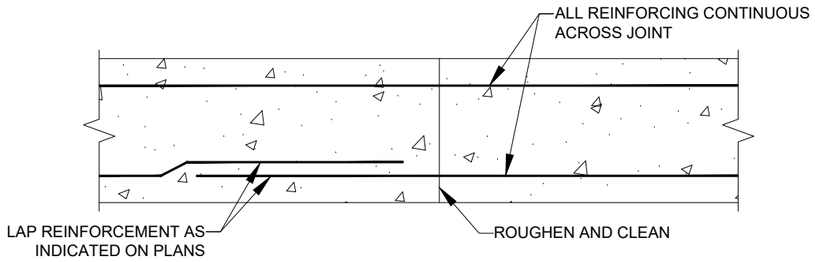

PLAN OR SECTION VIEW

Wall Construction Joint (1)

NO SCALE

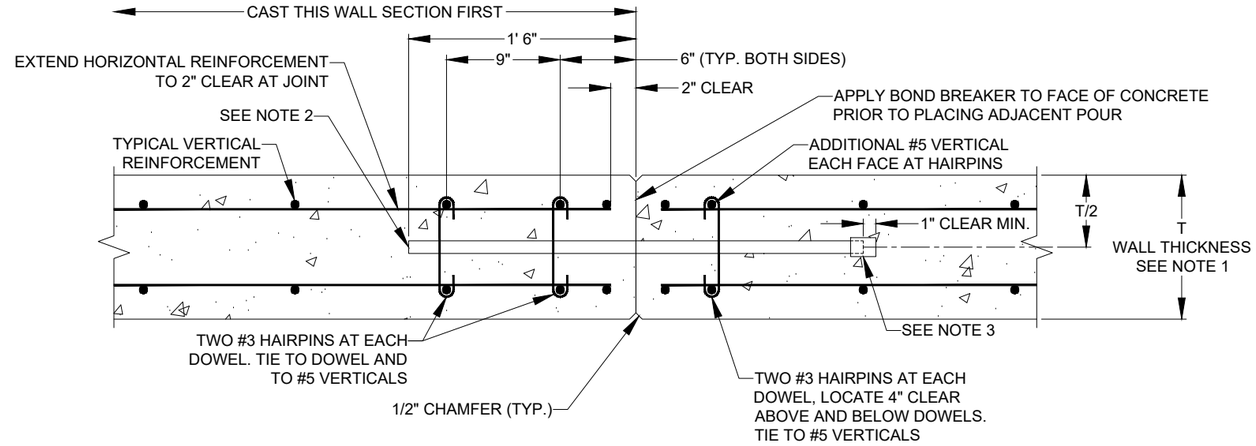

PLAN VIEW

Wall Vertical Contraction Joint (2)

1 0.5 0 1 2
Feet

NOTES:
1. FOR WALLS WITH THICKNESS OF 10" THROUGH 24"
2. 1" DIA. x 3'-0" SMOOTH COATED BAR DOWELS. LOCATE AT 1'-0" MAX FROM T AND B OF WALL AND AT 2'-0" MAX SPACING. ALIGN AND TIE-IN-PLACE TO REINFORCEMENTS. COATING SHALL CONSIST OF A CORROSION RESISTANT COATING PLUS A LUBRICANT COATING AS SPECIFIED.
3. 1" ID x 2" PLASTIC CAP WITH 1" POLYSTYRENE BETWEEN END OF DOWEL AND END CAP. TAP TO BAR FOR WATERTIGHT SEAL.

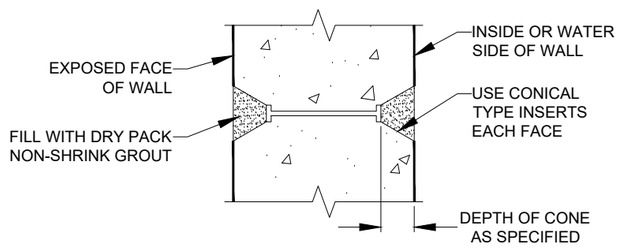

Form Snap-Tie Hole (3)

NO SCALE

NOTES:
- THE SPACING OF FORM TIES ON EXPOSED PORTIONS OF WALLS SHALL BE APPROXIMATELY EQUAL HORIZONTALLY AND VERTICALLY AND SHALL BE UNIFORM IN EACH DIRECTION.
- DRY PACK METHOD SHALL BE AS SPECIFIED USING STEEL TOOLS.

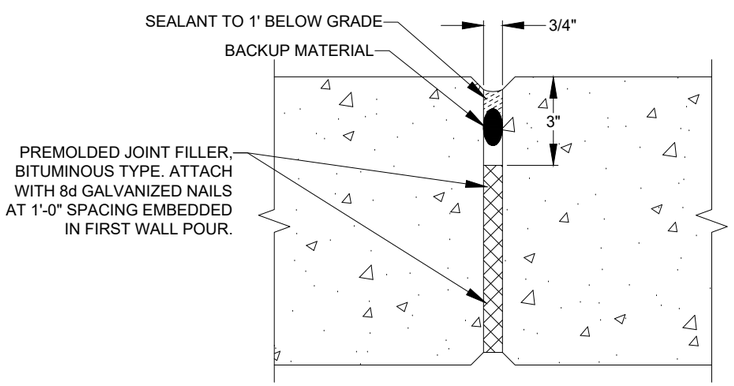

PLAN VIEW

Wall Expansion Joint Treatment (4)

NO SCALE

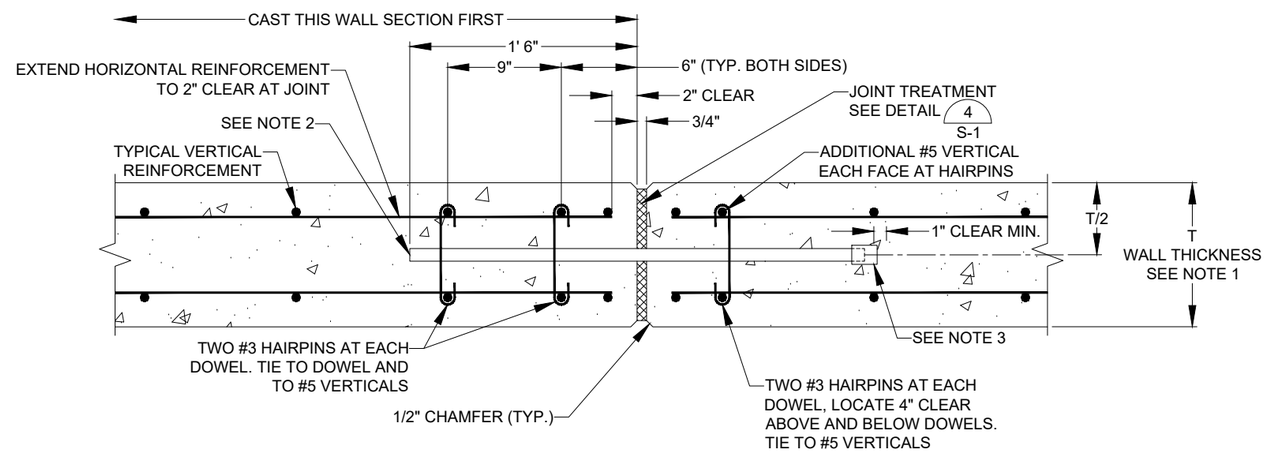

PLAN VIEW

Wall Vertical Expansion Joint (5)

1 0.5 0 1 2
Feet

NOTES:
1. FOR WALLS WITH THICKNESS OF 10" THROUGH 24"
2. 1" DIA. x 3'-0" SMOOTH COATED BAR DOWELS. LOCATE AT 1'-0" MAX FROM T AND B OF WALL AND AT 2'-0" MAX SPACING. ALIGN AND TIE-IN-PLACE TO REINFORCEMENTS. COATING SHALL CONSIST OF A CORROSION RESISTANT COATING PLUS A LUBRICANT COATING AS SPECIFIED.
3. 1" ID x 2" PLASTIC CAP WITH 1" POLYSTYRENE BETWEEN END OF DOWEL AND END CAP. TAP TO BAR FOR WATERTIGHT SEAL.

MONTANA TYLER R. JIRGES No. 87469 PE LICENSED PROFESSIONAL ENGINEER

Revision	Date	By
30% Draft	8/1/24	AE
60% Draft	11/18/24	AE
90% Draft	1/31/25	AE
Final	2/14/25	AE

Revision: Final
Plot Scale: 1:2
Drawn By: A. Eckhart, P.E.
Drawn By: E. Swanson
Approved By: Matt Miller, P.E.
Checked By: Tyler Jirges, P.E.
Designed By: Tyler Jirges, P.E.

Engineer
Anderson~Montgomery CONSULTING ENGINEERS
1064 N. Warren
Helena, MT 59601
Phone (406) 449-3303

RPA
602 S. Ferguson Ave. STE 5
Bozeman, MT 59718
Phone (406) 284-2110

Owner: City Of Missoula

Project Title: Garden City Compost Facility Improvements

Sheet Title: **Structural Details**

Sheet: **S-3**

X:\MISSOULA COMPOST\DESIGN\DRAWINGS\Sheets\8 - Structural\S-3, S-4, & S-5 Structural Details.dwg SAVED: 2/14/25 PRINTED: 2/17/25 BY: ADAM

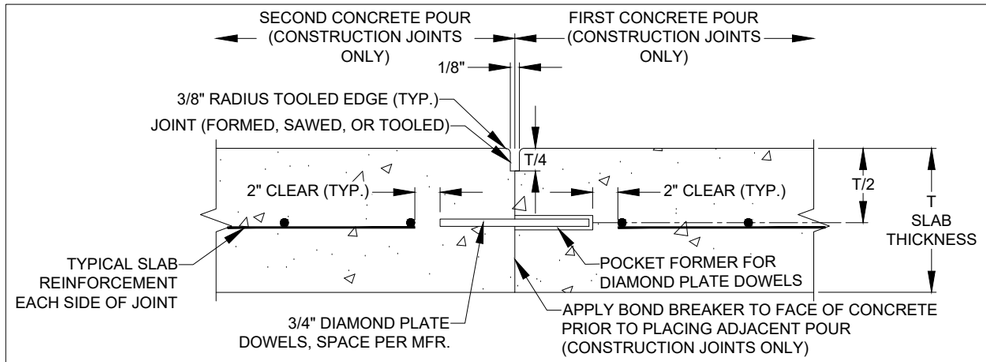

SECTION VIEW

Slab Control/Contraction Joint (1)

NO SCALE

NOTES:
1. AT CONTRACTOR'S OPTION, CONTROL JOINTS MAY BE FORMED OR SAWED. JOINTS MUST BE SAWN BETWEEN 12 AND 24 HOURS AFTER CONCRETE HAS BEEN PLACED.
2. DESIGN OF DIAMOND PLATE DOWEL SPACING TO BE SUBMITTED TO EOR FOR REVIEW.
3. AT CONTRACTOR'S OPTION, DIAMOND PLATE DOWELS MAY BE SUBSTITUED WITH 3/4"x10" SMOOTH DOWELS SPACED AT 12" O.C., CENTERED IN DEPTH OF SLAB. HALF DOWEL ON EITHER SIDE OF JOINT SHALL BE COATED WITH LIQUID ASPHALT MC-250, ROAD TAR RT-6, OR APPROVED EQUAL TO REDUCE BOND WITH CONCRETE ON ONE SIDE OF JOINT.

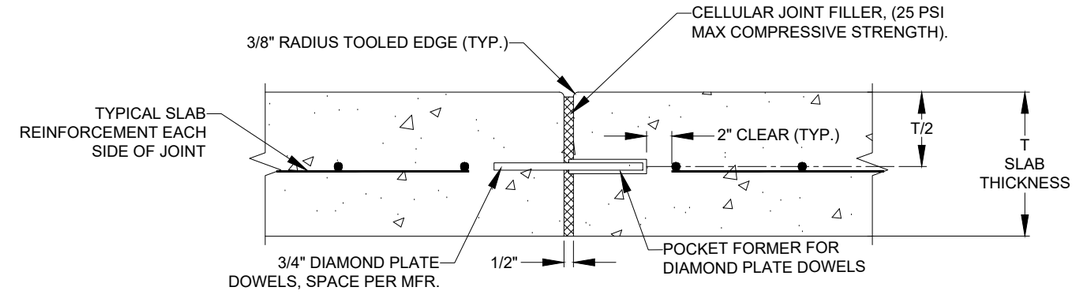

SECTION VIEW

Slab Construction/Expansion Joint (2)

NO SCALE

NOTES:
1. SPACING OF 3/4" DIAMOND PLATE DOWELS TO BE SUBMITTED TO EOR FOR REVIEW.

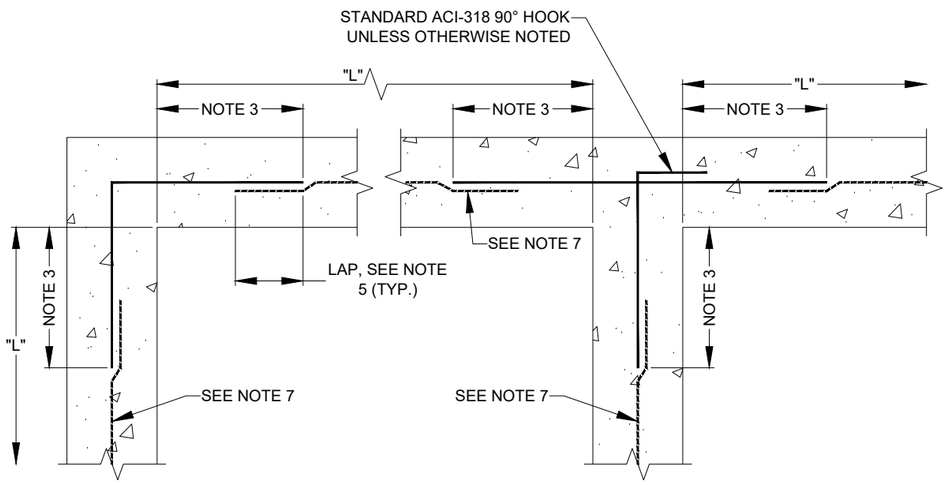

SINGLE REINFORCING MAT

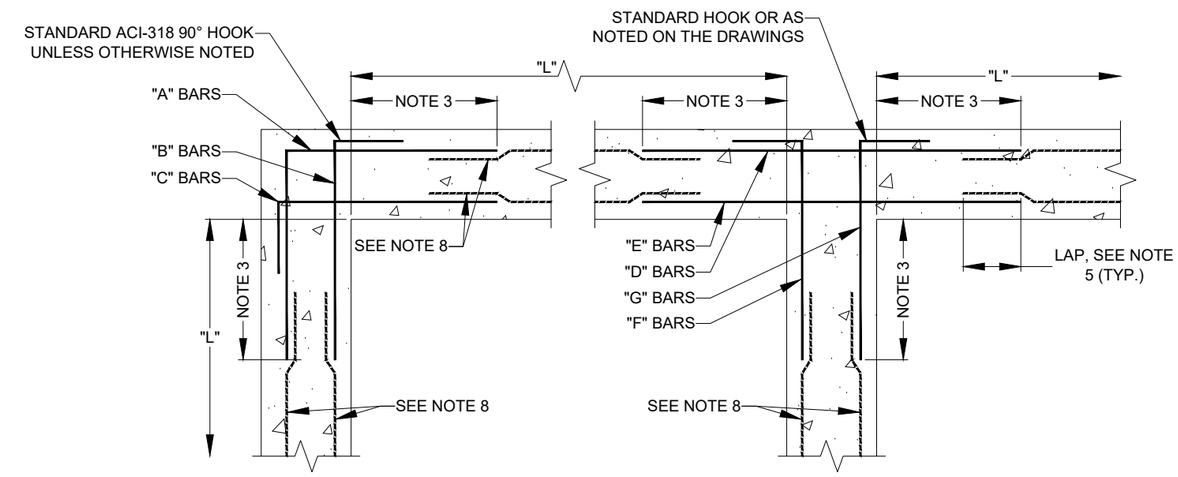

DOUBLE REINFORCING MAT

Typical Wall Corner and Intersection Reinforcing (3)

NO SCALE

NOTES:
1. TYPICAL HORIZONTAL WALL CORNER AND INTERSECTION REINFORCING LAYOUT IS SHOWN TO AVOID CONGESTION AND PERMIT PROPER PLACEMENT, FOR SIZE AND SPACING SEE PLANS. ALL HORIZONTAL REINFORCING AT CORNERS AND INTERSECTIONS SHALL BE FABRICATED AND INSTALLED WITH SPLICES LOCATED WHERE SHOWN REGARDLESS OF BAR SIZE AND SPACING.
2. WHERE THE CORNER OR INTERSECTION REINFORCING SIZE AND SPACING IS NOT SHOWN, NOTED OR TABULATED ON THE PLANS, THE SIZE AND SPACING SHALL BE THE SAME AS THE WALL HORIZONTAL REINFORCING SHOWN ON THE WALL SECTIONS OR AS NOTED FOR THE REINFORCING BETWEEN THE CORNERS OR INTERSECTIONS.
3. EXCEPT WHERE OTHERWISE SHOWN ON THE DRAWINGS, THE LENGTH INDICATED AS "NOTE 3" SHALL BE THE LESSER OF L/4, 10 FEET, OR 1.0 TIMES THE HEIGHT OF THE WALL, EXCEPT THAT IN NO CASE SHALL IT BE LESS THAN 2 FEET.
4. L = LENGTH OF WALL PARALLEL TO THE BAR LENGTH IN QUESTION.
5. EXCEPT WHERE OTHERWISE SHOWN ON THE DRAWINGS, THE LENGTH INDICATED AS "NOTE 5" SHALL BE EQUAL TO ONE "LAP LENGTH" AS REQUIRED BY THE GENERAL STRUCTURAL NOTES. USE THE LAP LENGTH AS REQUIRED FOR THE SMALLER OF THE TWO REINFORCING BARS BEING SPLICED.
6. UNLESS OTHERWISE NOTED, "B" AND "C" BARS ARE THE SAME SIZE AND SPACING AND, "F" AND "G" BARS ARE THE SAME SIZE AND SPACING.
7. HORIZONTAL WALL REINFORCING BETWEEN CORNERS AND INTERSECTIONS AS SHOWN ON WALL SECTIONS, LAP WITH CORNER AND INTERSECTION REINFORCING.
8. TYPICAL HORIZONTAL WALL REINFORCING AS SHOWN ON DRAWINGS, LAP WITH CORNER AND INTERSECTION REINFORCING.

MONTANA TYLER R. JIRGES No. 87469 PE LICENSED PROFESSIONAL ENGINEER

Revision	Date	By
30% Draft	8/1/24	AE
60% Draft	11/18/24	AE
90% Draft	1/31/25	AE
Final	2/14/25	AE

Revision: Final
Plot Scale: 1:2
Drawn By: A. Eckhart, P.E.
Drawn By: E. Swanson
Approved By: Matt Miller, P.E.
Checked By: Tyler Jirges, P.E.
Designed By: Tyler Jirges, P.E.

Engineer
Anderson~Montgomery CONSULTING ENGINEERS
1064 N. Warren
Helena, MT 59601
Phone (406) 449-3303
RPA
602 S. Ferguson Ave. STE 5
Bozeman, MT 59718
Phone (406) 284-2110

Owner: City Of Missoula

Project Title: Garden City Compost Facility Improvements

Sheet Title: **Structural Details**

Sheet: **S-4**

X:\MISSOULA COMPOST\DESIGN\DRAWINGS\Sheets\8 - Structural\S-3, S-4, & S-5 Structural Details.dwg SAVED: 2/18/25 PRINTED: 2/18/25 BY: ADAM

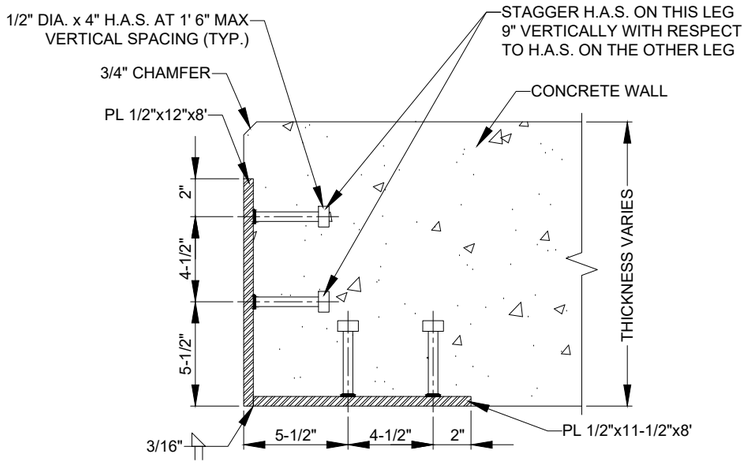

PLAN VIEW

Concrete Corner Armor Angle (1)

NO SCALE

NOTES:

- PAINT ASSEMBLY WITH SYSTEM NO. 4 AFTER FABRICATION.
- INSTALL BOTTOM OF ANGLE AT TOP OF SLAB ELEVATION.
- PROVIDE (1) VERTICAL ROW OF 3/16"Ø HOLES ALONG EACH ANGLE LEG FOR ATTACHMENT OF ANGLE TO FORMWORK.

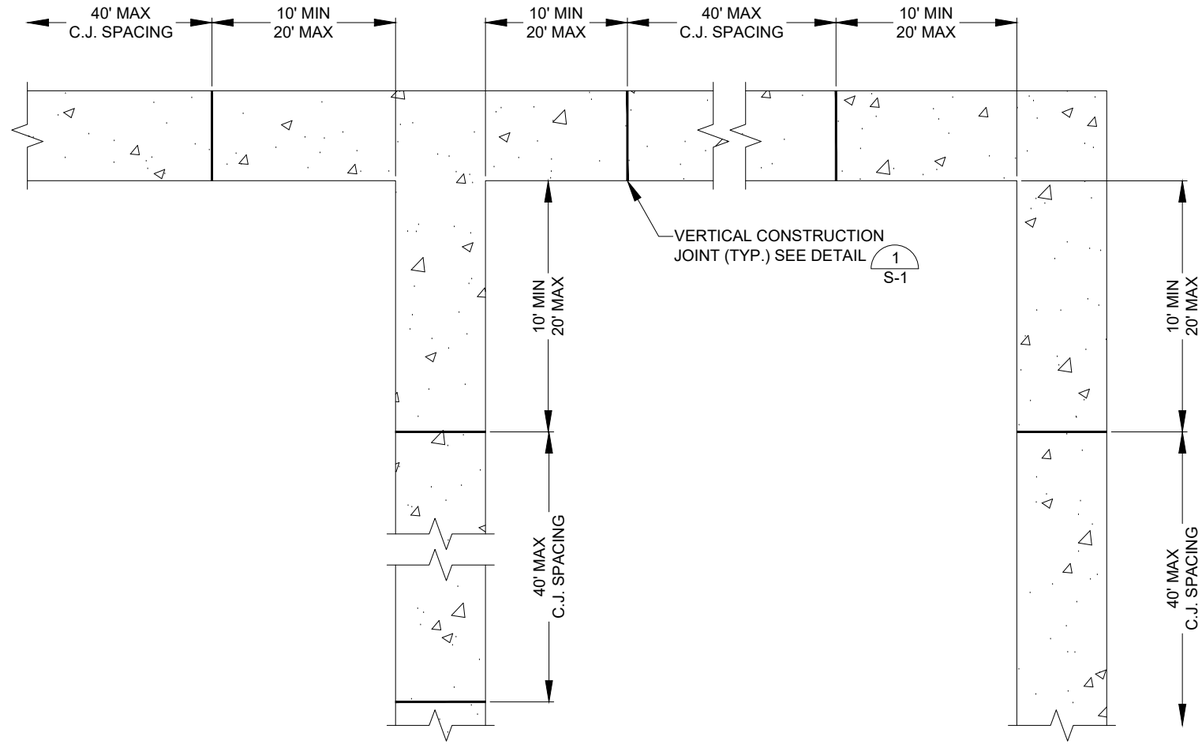

PLAN VIEW

Wall Construction Joint Spacing (2)

NO SCALE

NOTES:

- COORDINATE CONSTRUCTION JOINT LOCATIONS AND TIME BETWEEN CONCRETE POURS WITH PLANS AND PROJECT SPECIFICATIONS.
- LOCATE WALL CONSTRUCTION JOINTS AS SHOWN, UNLESS INDICATED OTHERWISE.

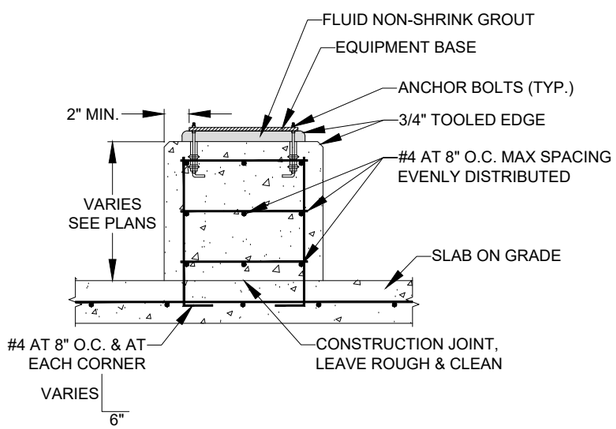

Blower/Fan Concrete Pedestal (3)

NO SCALE

NOTES:

- BARS SHALL BE PLACED ON 8" CENTERS AROUND PAD.
- ANCHOR BOLTS SHALL BE SIZED AND INSTALLED PER MANUFACTURER'S RECOMMENDATIONS.
- 3" MINIMUM COVER FOR ALL REBAR
- THE TAIL IN THE VERTICAL BARS SHALL BE LOCATED IN THE MIDDLE OF THE SLAB ON GRADE.
- REBAR SHALL BE TIED TOGETHER AT ALL CROSSINGS.

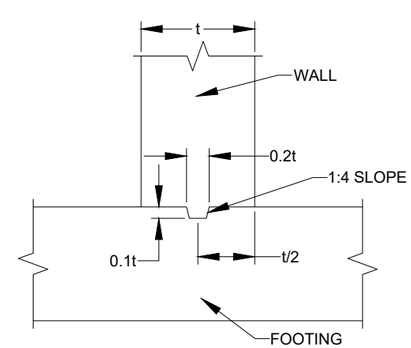

Wall/Footing Keyway Joint Detail (4)

NO SCALE

MONTANA
TYLER R. JIRGES
No. 87469 PE
LICENSED
PROFESSIONAL ENGINEER

Revision	Date	By
30% Draft	8/1/24	AE
60% Draft	11/18/24	AE
90% Draft	1/31/25	AE
Final	2/14/25	AE

Revision: Final
Plot Scale: 1:2
Drawn By: A. Eckhart, P.E.
Drawn By: E. Swanson
Approved By: Matt Miller, P.E.
Checked By: Tyler Jirges, P.E.
Designed By: Tyler Jirges, P.E.

Engineer
Anderson~Montgomery
CONSULTING ENGINEERS
1064 N. Warren
Helena, MT 59601
Phone (406) 449-3303

RPA
602 S. Ferguson Ave. STE 5
Bozeman, MT 59718
Phone (406) 284-2110

Owner: City Of Missoula

Project Title: Garden City Compost Facility Improvements

Sheet Title: **Structural Details**

Sheet: **S-5**

X:\MISSOULA COMPOST\DESIGN\DRAWINGS\Sheets\8 - Structural\S-3, S-4, & S-5 Structural Details.dwg SAVED: 2/11/25 PRINTED: 2/14/25 BY: ADAM

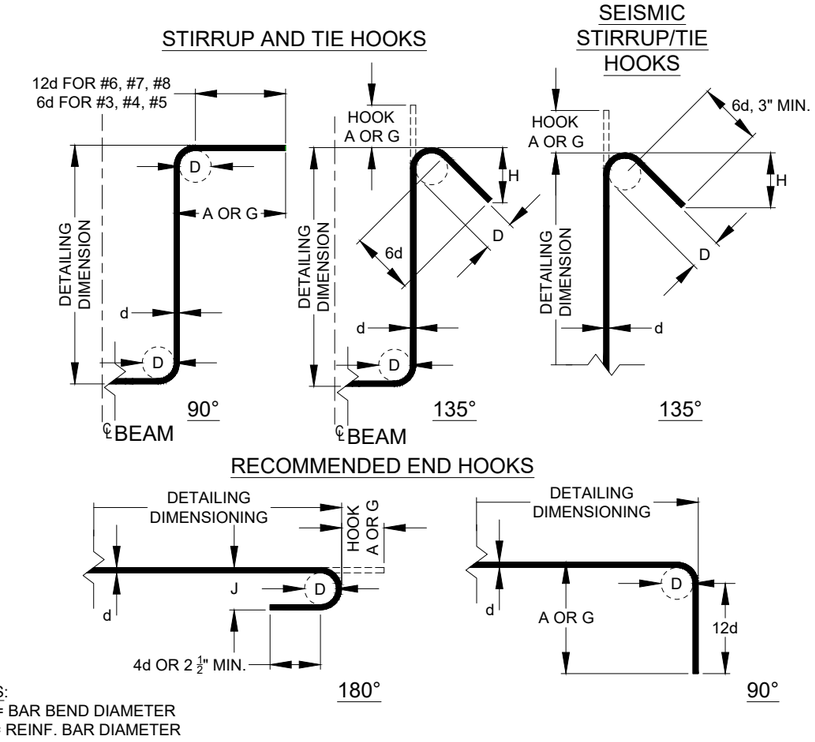

NOTES:
- 'D' = BAR BEND DIAMETER
- 'd' = REINF. BAR DIAMETER

STIRRUP (TIES SIMILAR) STIRRUP AND TIE HOOK DIMENSIONS				
BAR SIZE No.	D,* in.	90° HOOK	135° HOOK	
		HOOK A OR G, ft-in.	HOOK A OR G, ft-in	H APPROX., ft-in
#3	1 1/2	4	4	2 1/2
#4	2	4 1/2	4 1/2	3
#5	2 1/2	6	5 1/2	3 3/4
#6	4 1/2	1-0	8	4 1/2
#7	5 1/4	1-2	9	5 1/4
#8	6	1-4	10 1/2	6

135° SEISMIC STIRRUP/TIE HOOK DIMENSIONS			
BAR SIZE No.	D,* in.	135° HOOK	
		HOOK A OR G, ft-in	H APPROX., ft-in
#3	1 1/2	4 1/4	3
#4	2	4 1/2	3
#5	2 1/2	5 1/2	3 3/4
#6	4 1/2	8	4 1/2
#7	5 1/4	9	5 1/4
#8	6	10 1/2	6

RECOMMENDED END HOOKS (D= FINISHED BEND DIAMETERS)				
BAR SIZE No.	D,* in.	135° HOOK		90° HOOK
		A OR G, ft-in	J, ft-in	A OR G, ft-in.
#3	2 1/4	5	3	6
#4	3	6	4	8
#5	3 3/4	7	5	10
#6	4 1/2	8	6	1-0
#7	5 1/4	10	7	1-2
#8	6	11	8	1-4
#9	9 1/2	1-3	11 3/4	1-7
#10	10 3/4	1-5	1-1 1/4	1-10
#11	12	1-7	1-2 3/4	2-0
#14	18 1/4	2-3	1-9 3/4	2-7
#18	24	3-0	2-4 1/2	3-5

Standard Rebar Hooks (1 / S-6)
NO SCALE

CONCRETE REINFORCING BAR DEVELOPMENT & LAP SPLICE LENGTH SCHEDULE																					
BAR SIZE "db" (GRADE 60)	f'c = 3500 PSI					f'c = 4000 PSI					f'c = 4500 PSI					f'c = 5000 PSI				
	L_d	L_t	L_{sb}	L_{sbt}	L_{dh}	L_d	L_t	L_{sb}	L_{sbt}	L_{dh}	L_d	L_t	L_{sb}	L_{sbt}	L_{dh}	L_d	L_t	L_{sb}	L_{sbt}	L_{dh}
#4	22"	29"	29"	38"	8"	19"	25"	25"	33"	7"	18"	24"	24"	31"	7"	17"	23"	23"	30"	6"
#5	28"	36"	36"	47"	10"	24"	31"	31"	41"	9"	23"	30"	30"	38"	8"	22"	28"	28"	37"	8"
#6	33"	43"	43"	56"	12"	29"	37"	37"	49"	10"	27"	35"	35"	46"	10"	26"	34"	34"	45"	9"
#7	48"	63"	63"	81"	14"	42"	54"	54"	71"	12"	40"	51"	51"	67"	11"	38"	49"	49"	64"	11"
#8	51"	67"	67"	86"	15"	48"	62"	62"	81"	14"	45"	59"	59"	77"	13"	43"	56"	56"	73"	12"
#9	58"	76"	76"	98"	16"	54"	70"	70"	91"	15"	51"	66"	66"	86"	15"	48"	63"	63"	82"	14"

NOTES:
1. ALL TABULATED VALUES REQUIRE CLEAR SPACING BETWEEN BARS ≥ 2*db & CLEAR COVER ≥ db (IF THESE CONDITIONS ARE NOT SATISFIED, MULTIPLY TABULATED VALUES BY 1.5)
2. L_d = TENSION DEVELOPMENT LENGTH
3. L_t = DEVELOPMENT LENGTH FOR "TOP" BARS IN TENSION.
4. L_{sb} = TENSION LAP SPLICE LENGTH FOR BARS OTHER THAN "TOP" BARS ("CLASS B")
5. L_{sbt} = TENSION LAP SPLICE LENGTH OF "TOP" BARS.
6. L_{dh} = TENSION HOOK DEVELOPMENT LENGTH (SIDE COVER ≥ 2 1/2", END COVER ≥ 2").
7. "TOP" BARS = REINFORCEMENT WITH > 12" OF FRESH CONCRETE CAST BELOW.

Reinforcing Bar Development Schedule (2 / S-6)
NO SCALE

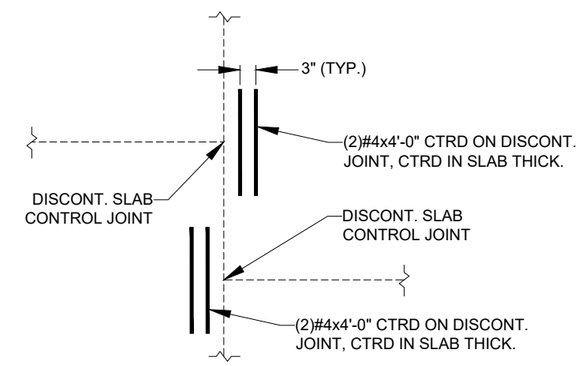

Supplemental Reinf. At Discontinuous Control Joints (3 / S-6)
NO SCALE

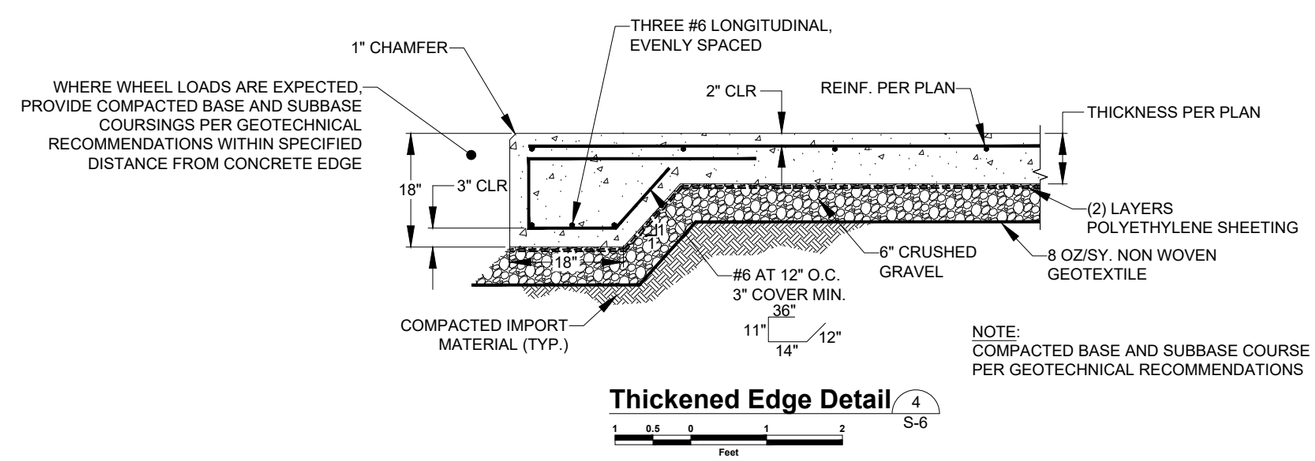

NOTE:
COMPACTED BASE AND SUBBASE COURSE PER GEOTECHNICAL RECOMMENDATIONS

Thickened Edge Detail (4 / S-6)

1 0.5 0 1 2
Feet

MONTANA TYLER R. JIRGES No. 87469 PE LICENSED PROFESSIONAL ENGINEER

Revision	Date	By
30% Draft	8/1/24	AE
60% Draft	11/18/24	AE
90% Draft	1/31/25	AE
Final	2/14/25	AE

Revision: Final
Plot Scale: 1:2
Drawn By: A. Eckhart, P.E.
Drawn By: E. Swanson
Approved By: Matt Miller, P.E.
Checked By: Tyler Jirges, P.E.
Designed By: Tyler Jirges, P.E.

Engineer
Anderson~Montgomery CONSULTING ENGINEERS
1064 N. Warren
Helena, MT 59601
Phone (406) 449-3303
RPA
602 S. Ferguson Ave. STE 5
Bozeman, MT 59718
Phone (406) 284-2110

Owner: City Of Missoula

Project Title: Garden City Compost Facility Improvements

Sheet Title: **Structural Details**

Sheet: **S-6**

X:\MISSOULA COMPOST\DESIGN\DRAWINGS\Sheets\8 – Structural\S-6 Structural Details.dwg SAVED: 2/18/25 PRINTED: 2/19/25 BY: ADAM

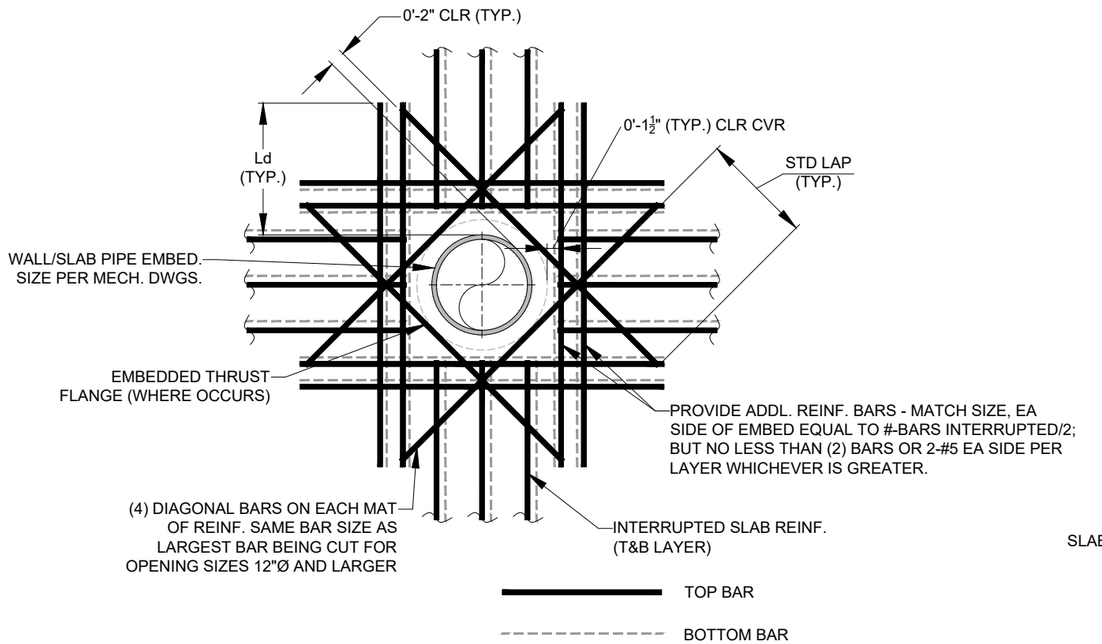

Standard Wall Pipe Embed In Slab/Wall (1)

NO SCALE

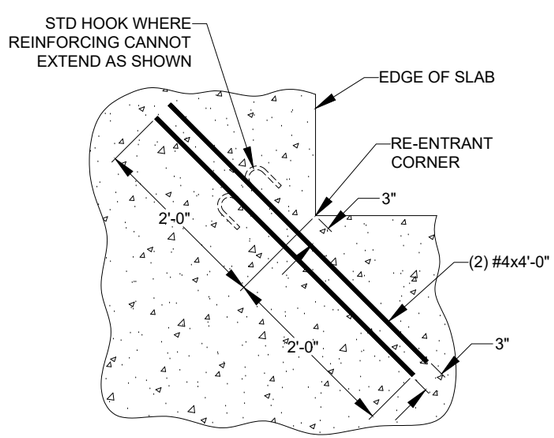

Re-Entrant Corner Slab Reinforcement (2)

NO SCALE

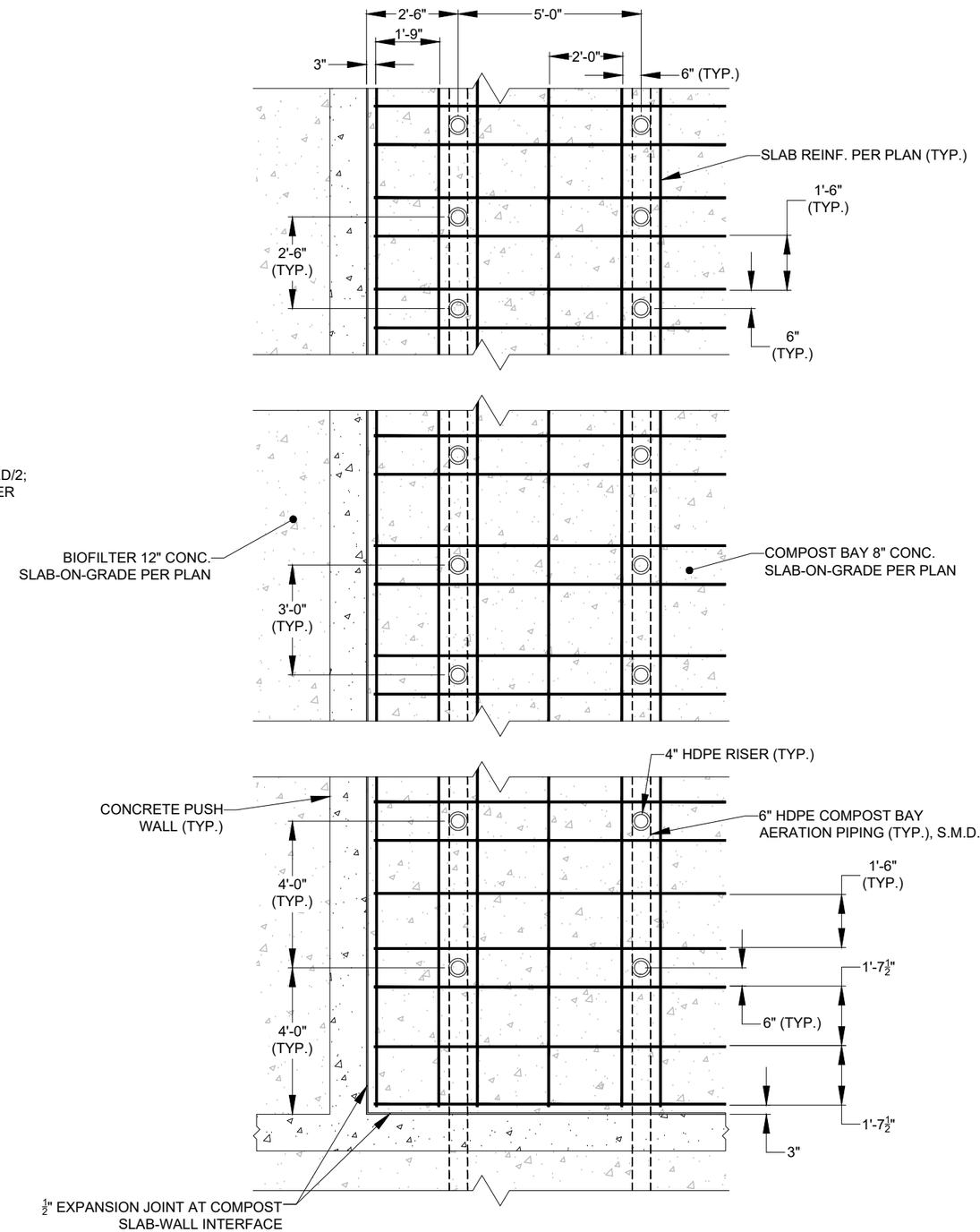

Compost Bay Partial Slab Plan (3)

NO SCALE

MONTANA
TYLER R. JIRGES
No. 87469 PE
LICENSED
PROFESSIONAL ENGINEER

Revision	Date	By
30% Draft	8/1/24	AE
60% Draft	11/18/24	AE
90% Draft	1/31/25	AE
Final	2/14/25	AE

Revision: Final
Plot Scale: 1:2
Drawn By: A. Eckhart, P.E.
Drawn By: E. Swanson
Approved By: Matt Miller, P.E.
Checked By: Tyler Jirges, P.E.
Designed By: Tyler Jirges, P.E.

Engineer
Anderson~Montgomery CONSULTING ENGINEERS
1064 N. Warren
Helena, MT 59601
Phone (406) 449-3303

RPA
602 S. Ferguson Ave. STE 5
Bozeman, MT 59718
Phone (406) 284-2110

Owner
City Of Missoula

Project Title
Garden City Compost Facility Improvements

Sheet Title
Structural Details

Sheet
S-7

X:\MISSOULA COMPOST\DESIGN\DRAWINGS\Sheets\8 – Structural\S-7 Structural Details.dwg SAVED: 2/14/25 PRINTED: 2/18/25 BY: ADAM

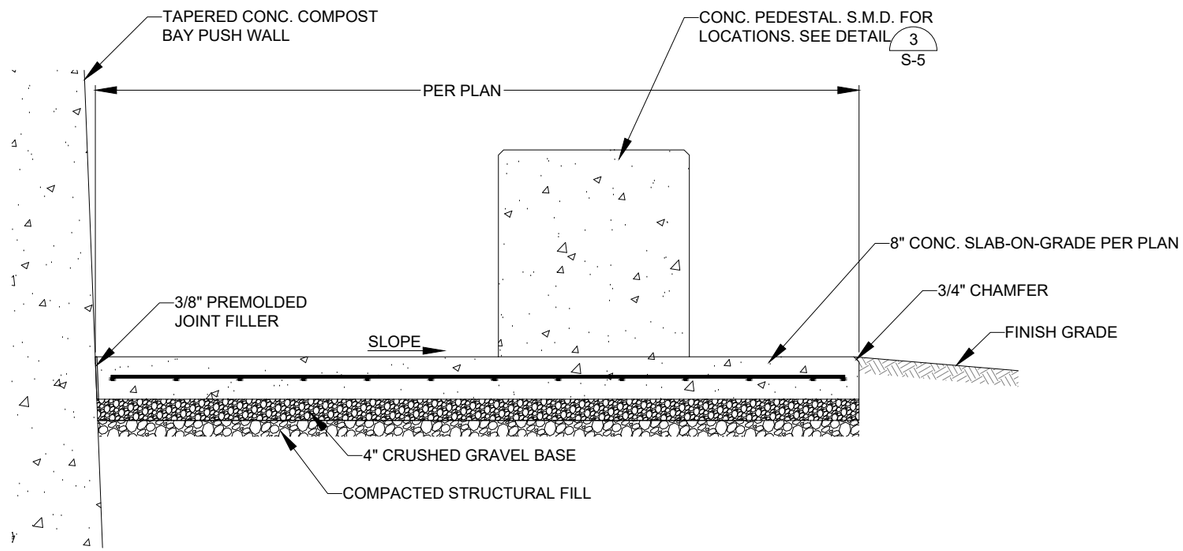

Compost Bay Aeration Equipment Slab Section 1 ~

NO SCALE

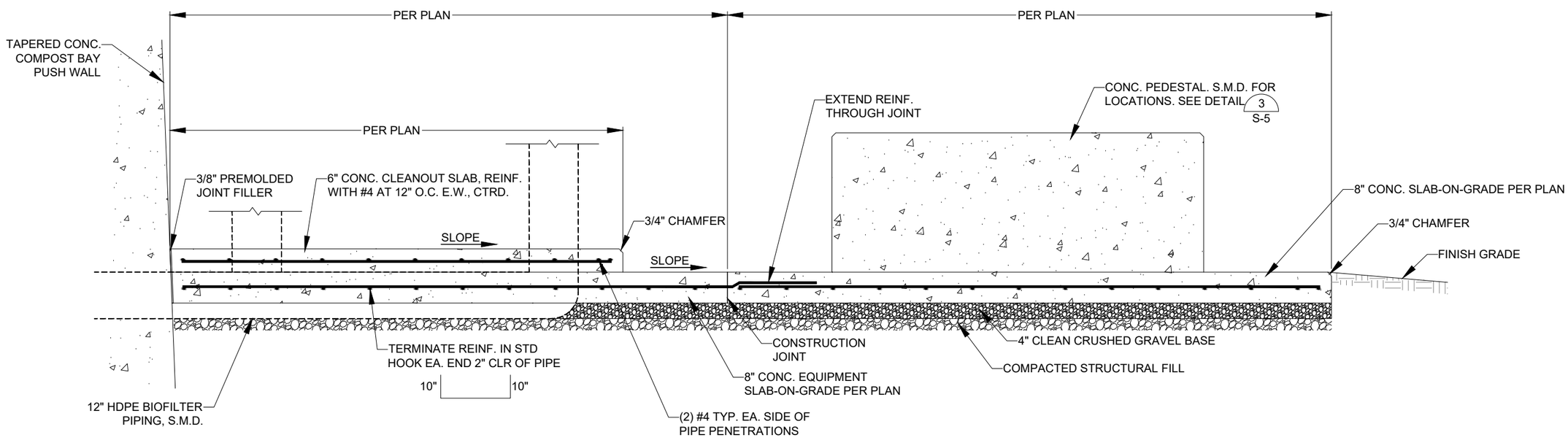

Biofilter Equipment Slabs Section 2 ~

NO SCALE

MONTANA TYLER R. JIRGES No. 87469 PE LICENSED PROFESSIONAL ENGINEER

Revision	Date	By
30% Draft	8/1/24	AE
60% Draft	11/18/24	AE
90% Draft	1/31/25	AE
Final	2/14/25	AE

Revision: Final
Plot Scale: 1:2
Drawn By: A. Eckhart, P.E.
Drawn By: E. Swanson
Approved By: Matt Miller, P.E.
Checked By: Tyler Jirges, P.E.
Designed By: Tyler Jirges, P.E.

Engineer
Anderson~Montgomery CONSULTING ENGINEERS
1064 N. Warren
Helena, MT 59601
Phone (406) 449-3303
RPA
602 S. Ferguson Ave. STE 5
Bozeman, MT 59718
Phone (406) 284-2110

Owner: City Of Missoula

Project Title: Garden City Compost Facility Improvements

Sheet Title: **Structural Details**

Sheet: **S-8**

X:\MISSOULA COMPOST\DESIGN\DRAWINGS\Sheets\8 - Structural\S-8 Structural Details.dwg SAVED: 2/17/25 PRINTED: 2/18/25 BY: ADAM

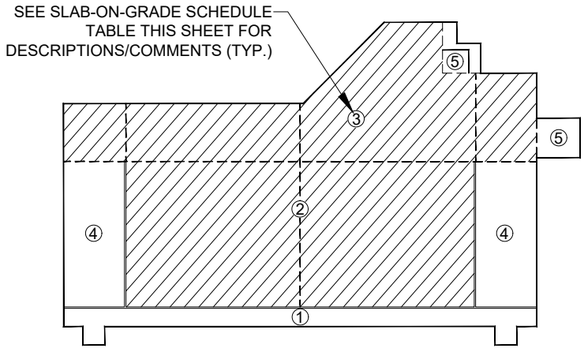

Overall Slab On Grade Partial Plan

SLAB-ON-GRADE SCHEDULE		
MARK	DESCRIPTION	COMMENTS
1	8" EQUIPMENT SLAB	
2	8" COMPOST BAY SLAB	SHRINKAGE-COMPENSATING CONC.
3	8" WORKING APRON SLAB	SHRINKAGE-COMPENSATING CONC.
4	12" BIOFILTER BAY SLABS	
5	10" BIOSOLIDS/PRE-COMPOST BIN SLABS	

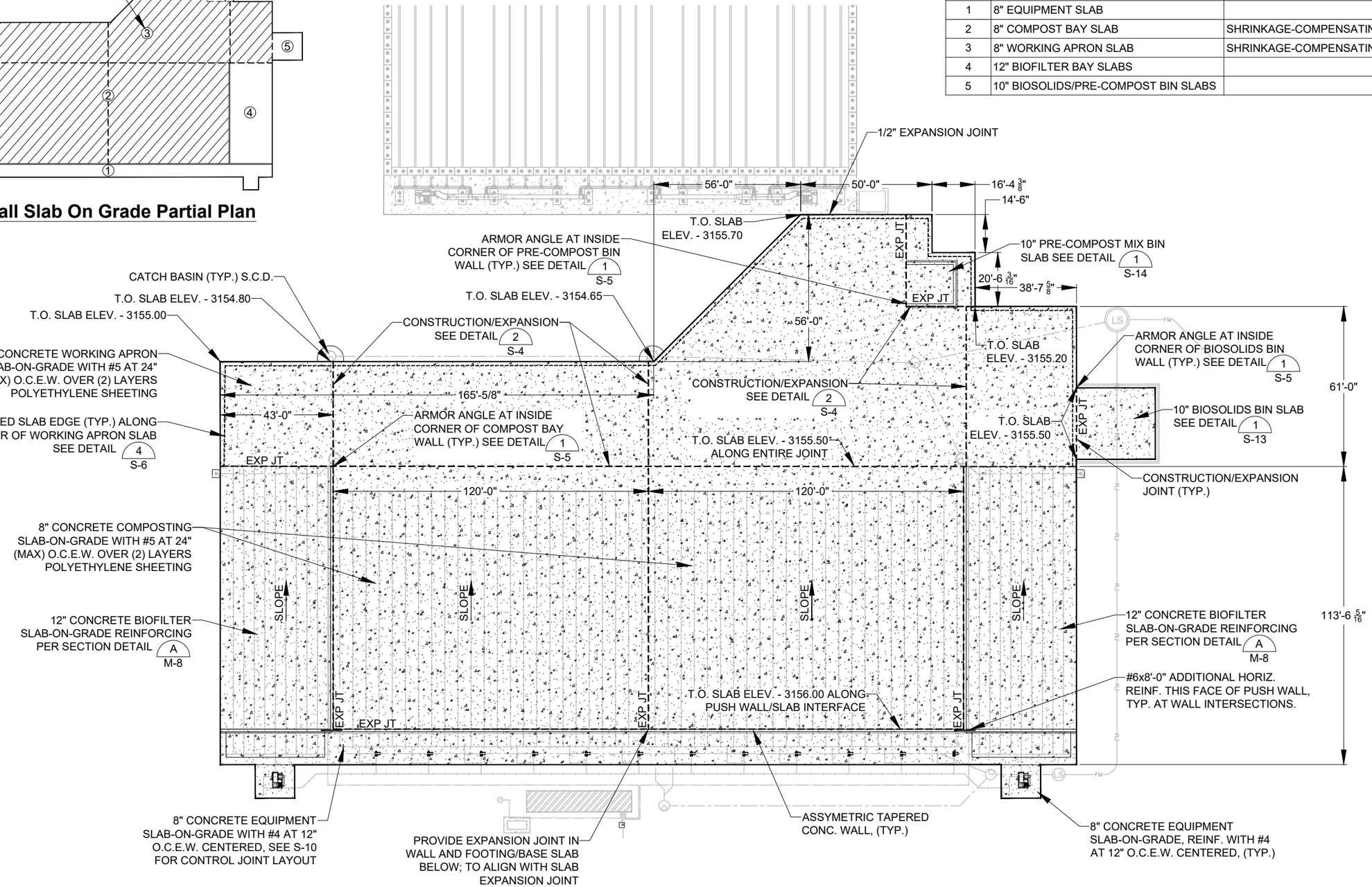

Overall Slab On Grade Plan

20 10 0 20 40
Feet

N

PLAN NOTES:
1. COMPOST BAY AND WORKING APRON SLABS-ON-GRADE SHALL BE TYPE K SHRINKAGE-COMPENSATING CONCRETE MIX PER PROJECT SPECIFICATIONS.
2. GENERAL CONTRACTOR SHALL SUBMIT A POUR SEQUENCE PLACEMENT PLAN TO EOR FOR REVIEW PRIOR TO COMMENCEMENT OF CONSTRUCTION.

MONTANA TYLER R. JIRGES No. 87469 PE LICENSED PROFESSIONAL ENGINEER

Revision	Date	By
30% Draft	8/1/24	AE
60% Draft	11/18/24	AE
90% Draft	1/31/25	AE
Final	2/14/25	AE

Revision: Final
Plot Scale: 1:2
Drawn By: A. Eckhart, P.E.
Drawn By: E. Swanson
Approved By: Matt Miller, P.E.
Checked By: Tyler Jirges, P.E.
Designed By: Tyler Jirges, P.E.

Engineer
Anderson~Montgomery CONSULTING ENGINEERS
1064 N. Warren
Helena, MT 59601
Phone (406) 449-3303

RPA
602 S. Ferguson Ave. STE 5
Bozeman, MT 59718
Phone (406) 284-2110

Owner: City Of Missoula

Project Title: Garden City Compost Facility Improvements

Sheet Title: **Overall Slab On Grade Plan**

Sheet: **S-9**

X:\MISSOULA COMPOST\DESIGN\DRAWINGS\Sheets\8 - Structural\S-9 Overall Slab On Grade Plan.dwg SAVED: 2/19/25 PRINTED: 2/19/25 BY: ADAM

NOTE:
SEE MECHANICAL
SHEETS FOR PIPING

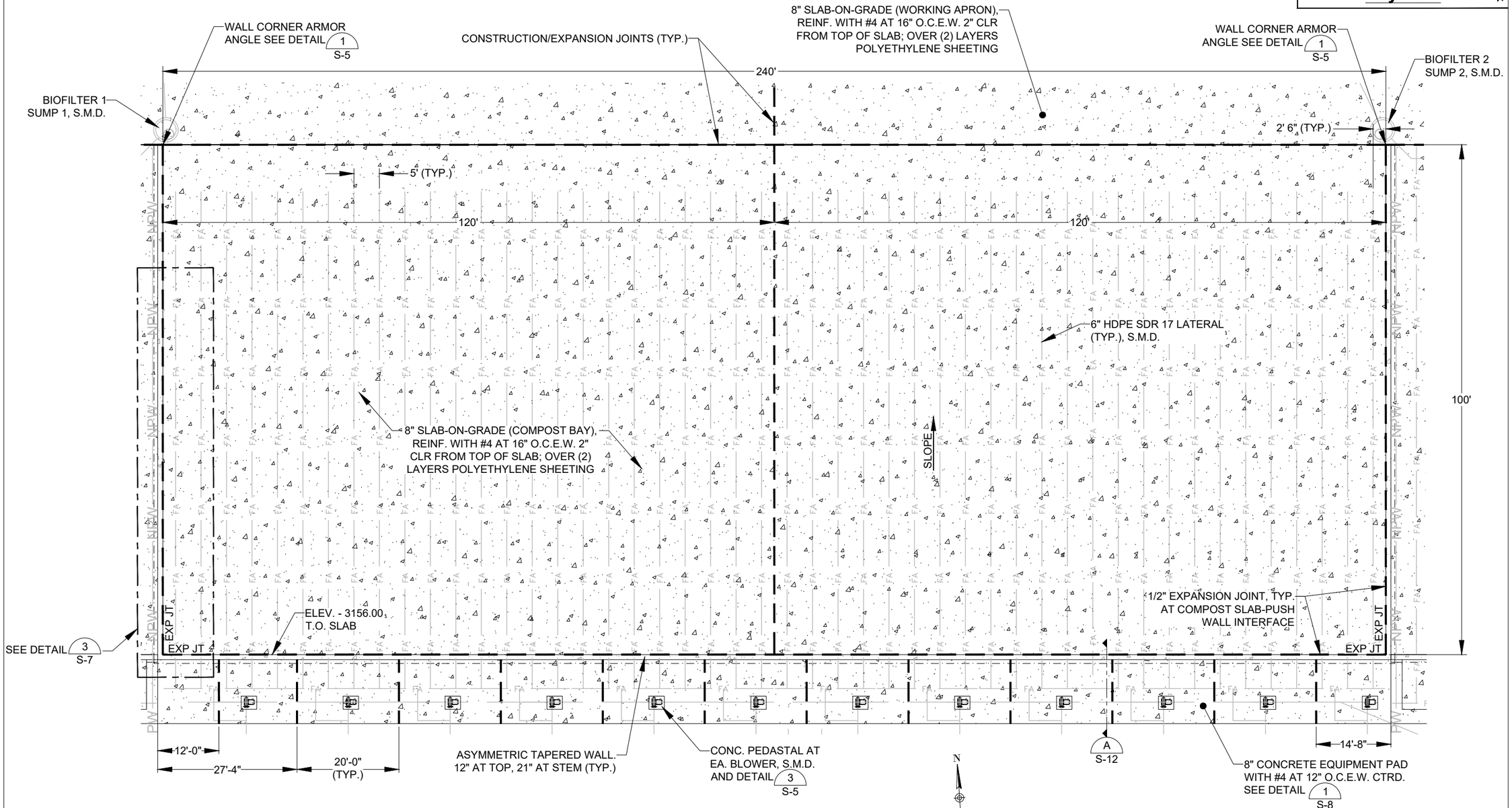

Compost Bays Plan

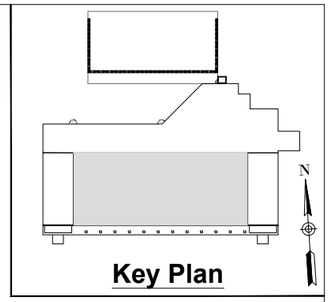

Key Plan

MONTANA
TYLER R. JIRGES
No. 87469 PE
LICENSED
PROFESSIONAL ENGINEER

Revision	Date	By
30% Draft	8/1/24	AE
60% Draft	11/18/24	AE
90% Draft	1/31/25	AE
Final	2/14/25	AE

Revision: Final
Plot Scale: 1:2
Drawn By: A. Eckhart, P.E.
Drawn By: E. Swanson
Approved By: Matt Miller, P.E.
Checked By: Tyler Jirges, P.E.
Designed By: Tyler Jirges, P.E.

Engineer
Anderson~Montgomery
CONSULTING ENGINEERS
1064 N. Warren
Helena, MT 59601
Phone (406) 449-3303

RPA
602 S. Ferguson Ave. STE 5
Bozeman, MT 59718
Phone (406) 284-2110

Owner
City Of Missoula

Project Title
Garden City Compost Facility Improvements

Sheet Title
Compost Bays

Sheet
S-10

X:\MISSOULA COMPOST\DESIGN\DRAWINGS\Sheets\8 – Structural\S-10 Compost Bays Plan.dwg SAVED: 2/18/25 PRINTED: 2/18/25 BY: ADAM

NOTE:
SEE MECHANICAL
SHEETS FOR PIPING

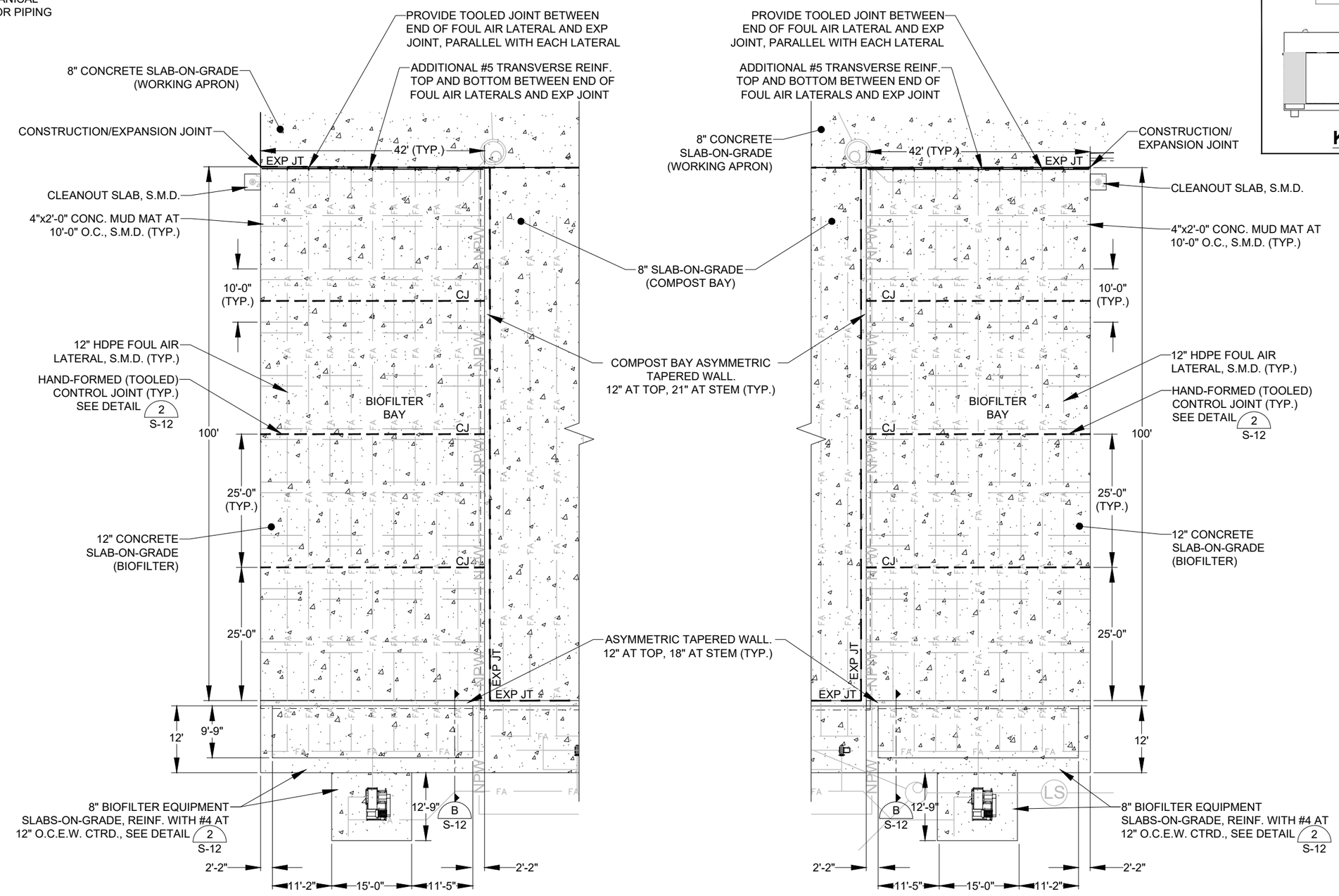

Biofilters Plan

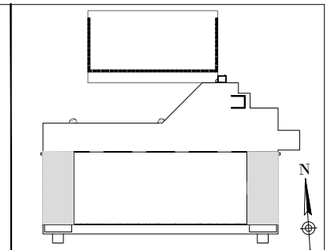

Key Plan

MONTANA
TYLER R. JIRGES
No. 87469 PE
LICENSED PROFESSIONAL ENGINEER

Revision	Date	By
30% Draft	8/1/24	AE
60% Draft	11/18/24	AE
90% Draft	1/31/25	AE
Final	2/14/25	AE

Revision: Final
Plot Scale: 1:2
Drawn By: A. Eckhart, P.E.
Drawn By: E. Swanson
Approved By: Matt Miller, P.E.
Checked By: Tyler Jirges, P.E.
Designed By: Tyler Jirges, P.E.

Engineer
Anderson~Montgomery CONSULTING ENGINEERS
1064 N. Warren
Helena, MT 59601
Phone (406) 449-3303

RPA
602 S. Ferguson Ave. STE 5
Bozeman, MT 59718
Phone (406) 284-2110

Owner
City Of Missoula

Project Title
Garden City Compost Facility Improvements

Sheet Title
Biofilters

Sheet
S-11

X:\MISSOULA COMPOST\DESIGN\DRAWINGS\Sheets\8 – Structural\S-11 Biofilters Plan.dwg SAVED: 2/18/25 PRINTED: 2/19/25 BY: ADAM

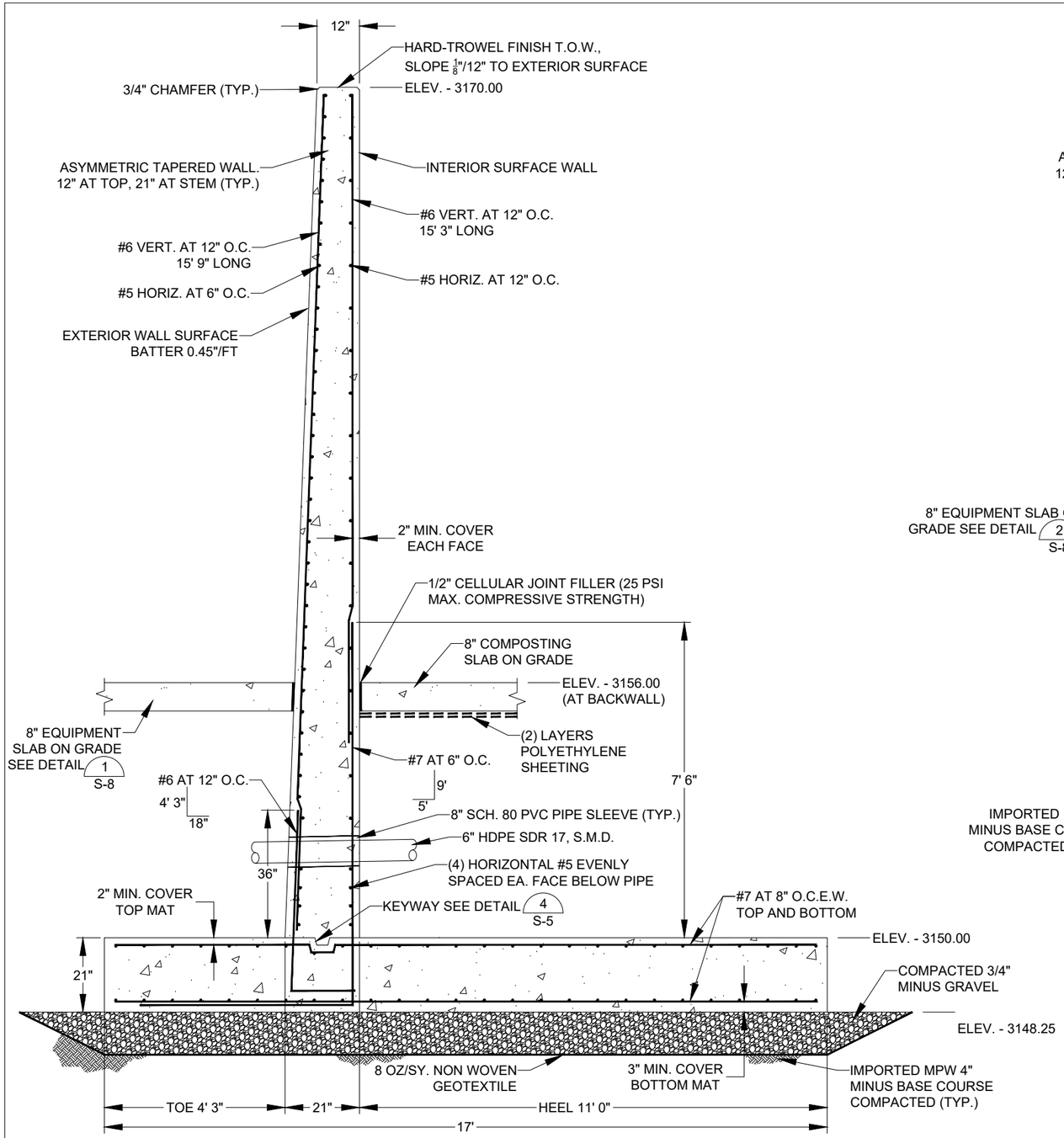

External Compost Wall Section (1 / S-10)

1.5 0.75 0 1.5 3 Feet

NOTE:

- SUBGRADE BENEATH SLAB-ON-GRADE NOT SHOWN FOR DRAWING CLARITY. SUBGRADE SHALL BE IMPORTED MPW 4" MINUS BASE COURSE COMPACTED.
- FOR REINFORCEMENT REQUIREMENTS WHERE INTERRUPTED BY PIPE PENETRATIONS SEE DETAIL 1 / S-7

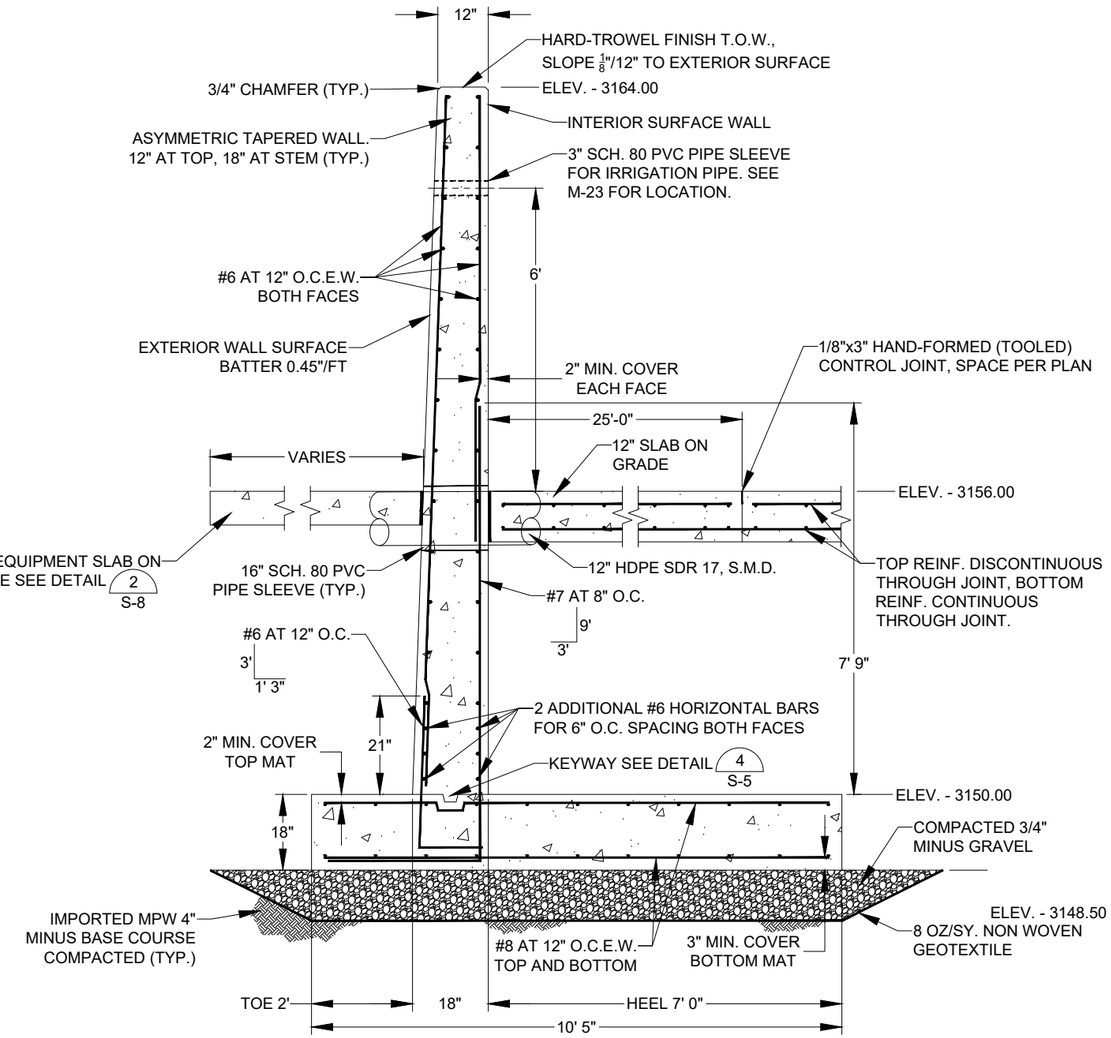

Biofilter Push Wall Section (2 / S-11)

1.5 0.75 0 1.5 3 Feet

NOTE:

- SUBGRADE BENEATH SLAB-ON-GRADE NOT SHOWN FOR DRAWING CLARITY. SUBGRADE SHALL BE IMPORTED MPW 4" MINUS BASE COURSE COMPACTED.
- FOR REINFORCEMENT REQUIREMENTS WHERE INTERRUPTED BY PIPE PENETRATIONS SEE DETAIL 1 / S-7

MONTANA TYLER R. JIRGES No. 87469 PE LICENSED PROFESSIONAL ENGINEER

Revision	Date	By
30% Draft	8/1/24	AE
60% Draft	11/18/24	AE
90% Draft	1/31/25	AE
Final	2/14/25	AE

Revision: Final
Plot Scale: 1:2
Drawn By: A. Eckhart, P.E.
Drawn By: E. Swanson
Approved By: Matt Miller, P.E.
Checked By: Tyler Jirges, P.E.
Designed By: Tyler Jirges, P.E.

Engineer
Anderson~Montgomery CONSULTING ENGINEERS
1064 N. Warren
Helena, MT 59601
Phone (406) 449-3303

RPA
602 S. Ferguson Ave. STE 5
Bozeman, MT 59718
Phone (406) 284-2110

Owner: City Of Missoula

Project Title: Garden City Compost Facility Improvements

Sheet Title: **Push Wall Sections**

Sheet: **S-12**

X:\MISSOULA COMPOST\DESIGN\DRAWINGS\Sheets\8 - Structural\S-12 Push Wall Sections.dwg SAVED: 2/17/25 PRINTED: 2/18/25 BY: ADAM

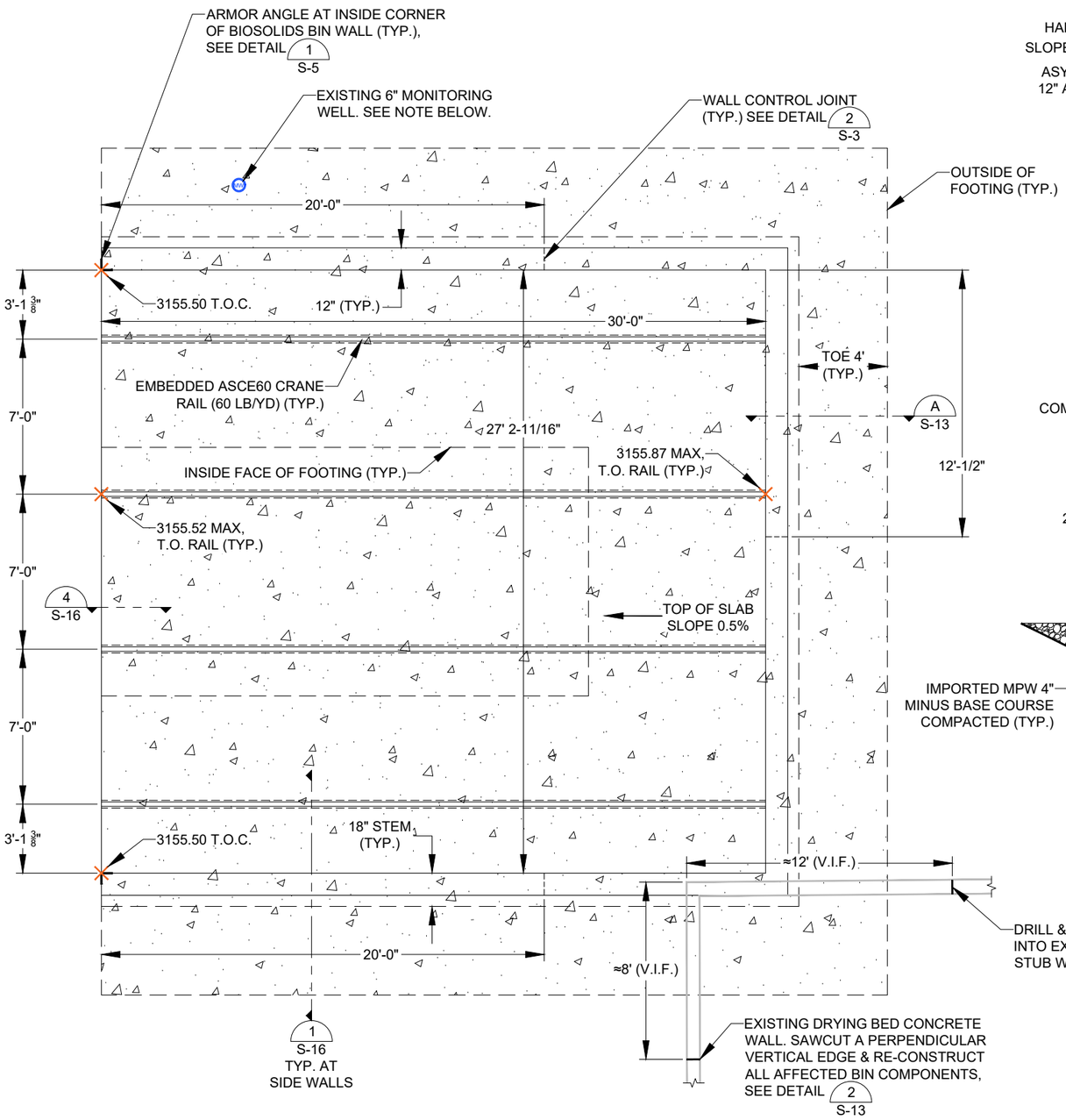

Biosolids Bin 1 C-8

3 1.5 0 3 6 Feet

NOTE:
CAST CONCRETE FOOTING AROUND EXISTING MONITORING WELL. PLACE REBAR TO ACCOMMODATE CASING. ENSURE PROTECTION OF WELL THROUGHOUT DEMOLITION AND CONSTRUCTION.

NOTE:
- SUBGRADE BENEATH SLAB-ON-GRADE NOT SHOWN FOR DRAWING CLARITY. SUBGRADE SHALL BE IMPORTED MPW 4" MINUS BASE COURSE COMPACTED.

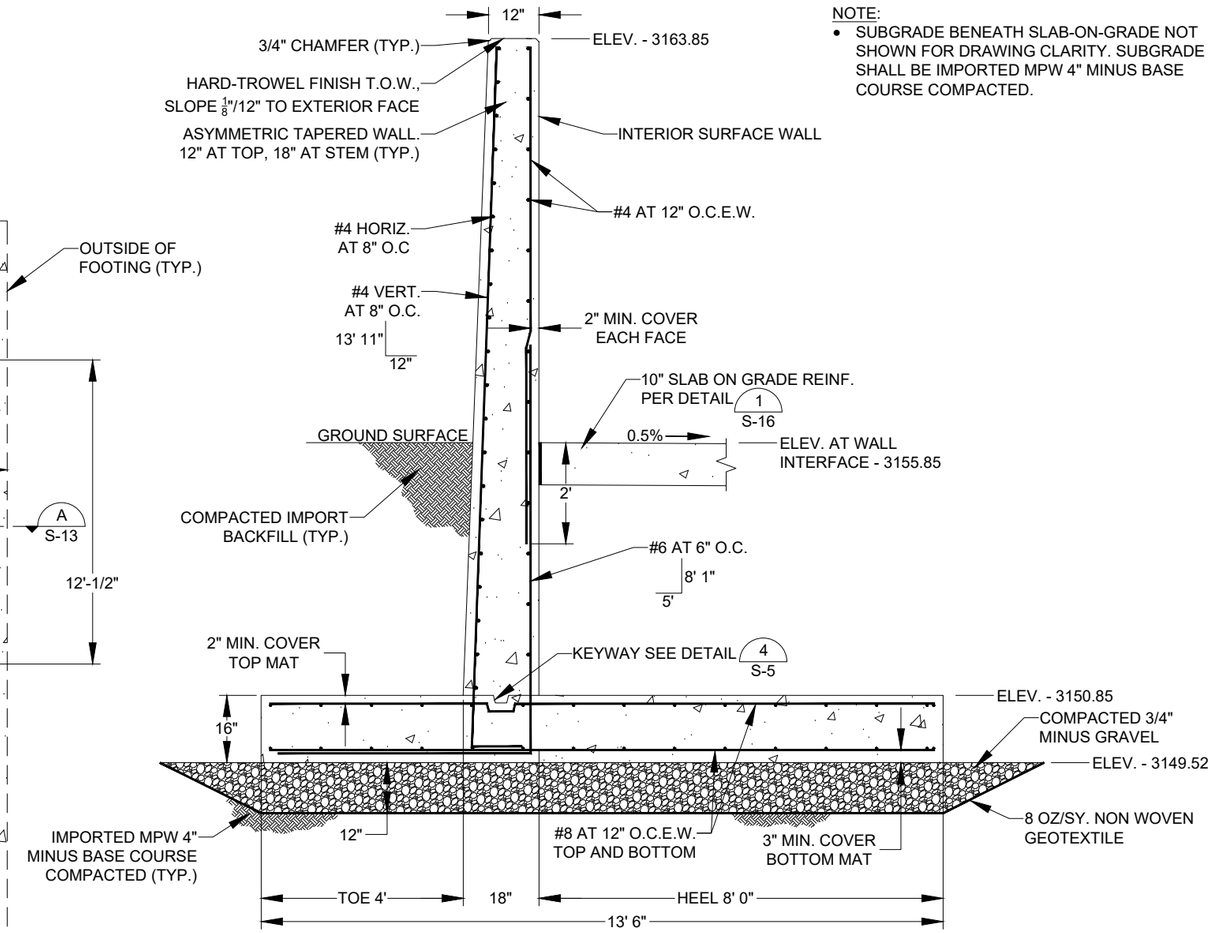

Biosolids Bin Push Wall Section A S-13

1.5 0.75 0 1.5 3 Feet

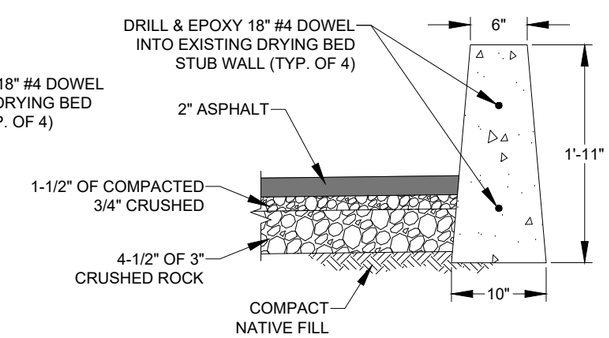

Existing Drying Bed Wall Section 2 S-13

NO SCALE

NOTE:
THE SOUTHEAST CORNER OF THE BIOSOLIDS BIN WILL SHARE A COMMON WALL WITH THE NORTHWEST CORNER OF THE EXISTING DRYING BED. RE-CONSTRUCT THE EFFECTED DRYING BED WALLS TO INTERSECT WITH THE BIOSOLIDS BID WALLS.

MONTANA TYLER R. JIRGES No. 87469 PE LICENSED PROFESSIONAL ENGINEER

Revision	Date	By
30% Draft	8/1/24	AE
60% Draft	11/18/24	AE
90% Draft	1/31/25	AE
Final	2/14/25	AE

Revision: Final
Plot Scale: 1:2
Drawn By: A. Eckhart, P.E.
Drawn By: E. Swanson
Approved By: Matt Miller, P.E.
Checked By: Tyler Jirges, P.E.
Designed By: Tyler Jirges, P.E.

Engineer
Anderson~Montgomery CONSULTING ENGINEERS
1064 N. Warren
Helena, MT 59601
Phone (406) 449-3303

RPA
602 S. Ferguson Ave. STE 5
Bozeman, MT 59718
Phone (406) 284-2110

Owner: City Of Missoula

Project Title: Garden City Compost Facility Improvements

Sheet Title: **Biosolids Bin Details**

Sheet: **S-13**

X:\MISSOULA COMPOST\DESIGN\DRAWINGS\Sheets\8 – Structural\S-13 Biosolids Bin Details.dwg SAVED: 2/17/25 PRINTED: 2/18/25 BY: ADAM

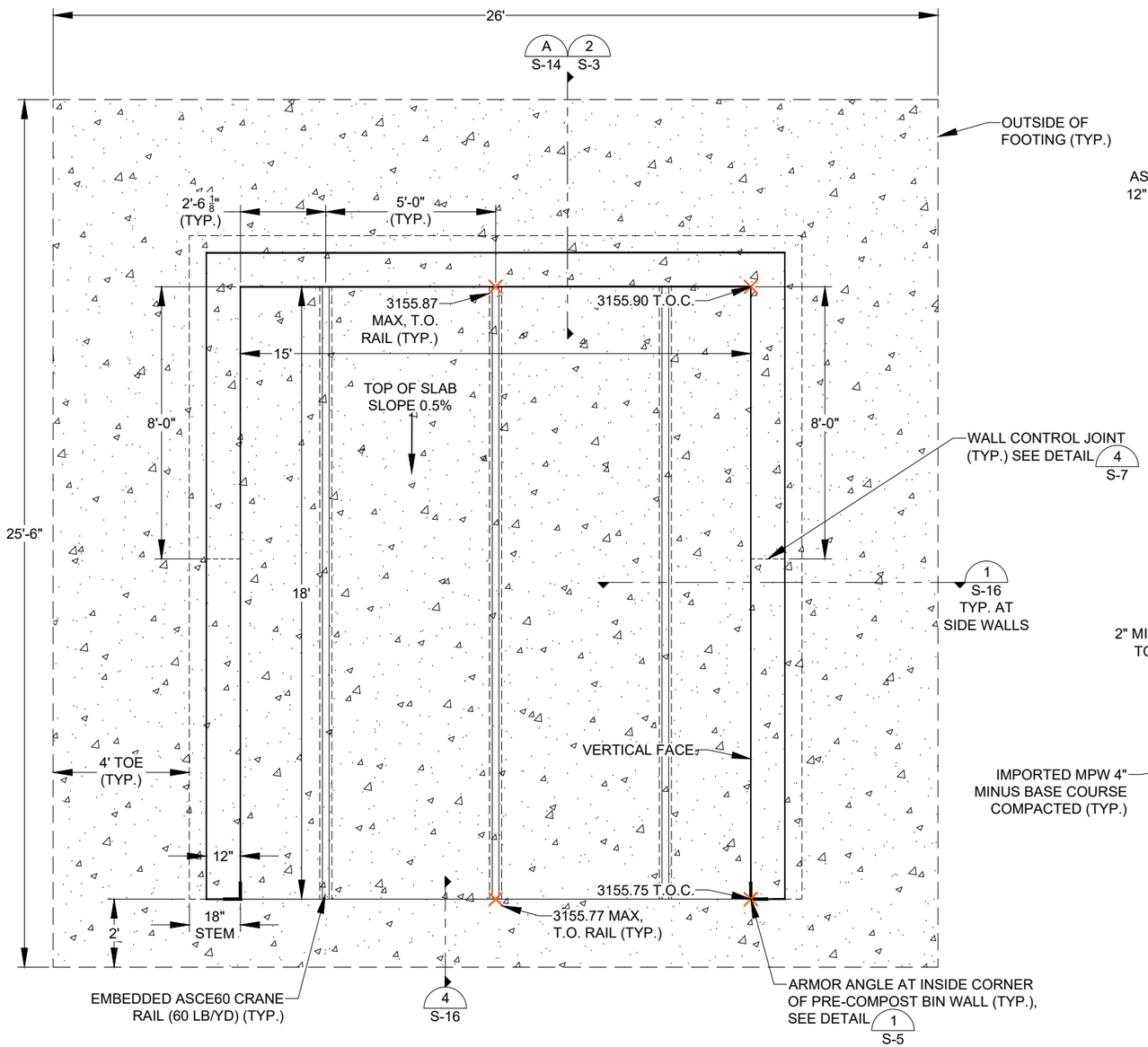

Pre-Compost Containment Bin (1 / C-8)

2 1 0 2 4 Feet

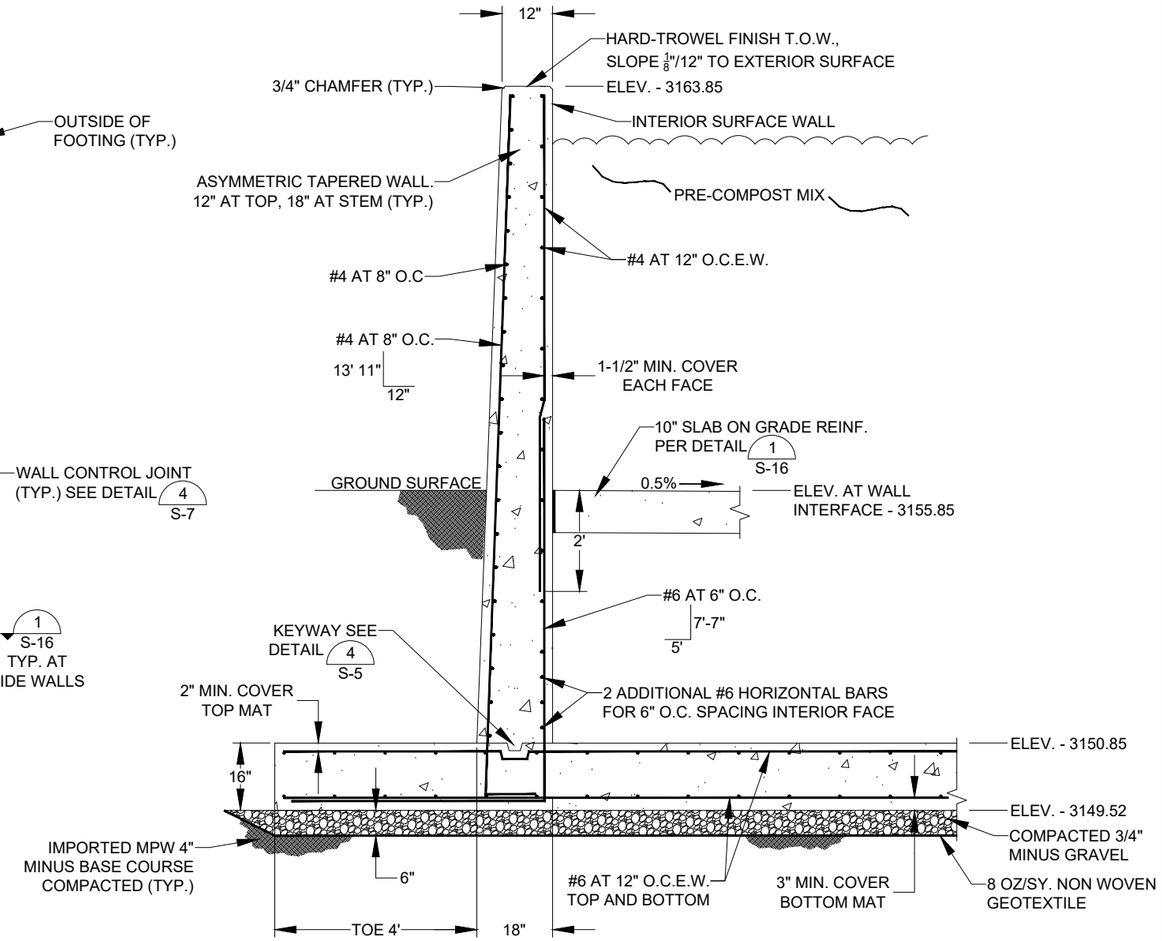

Premix Bin Wall Section (A / S-14)

1.5 0.75 0 1.5 3 Feet

NOTE:

- SUBGRADE BENEATH SLAB-ON-GRADE NOT SHOWN FOR DRAWING CLARITY. SUBGRADE SHALL BE IMPORTED MPW 4" MINUS BASE COURSE COMPACTED.

MONTANA TYLER R. JIRGES No. 87469 PE LICENSED PROFESSIONAL ENGINEER

Revision	Date	By
30% Draft	8/1/24	AE
60% Draft	11/18/24	AE
90% Draft	1/31/25	AE
Final	2/14/25	AE

Revision: Final
Plot Scale: 1:2
Drawn By: A. Eckhart, P.E.
Drawn By: E. Swanson
Approved By: Matt Miller, P.E.
Checked By: Tyler Jirges, P.E.
Designed By: Tyler Jirges, P.E.

Engineer
Anderson~Montgomery CONSULTING ENGINEERS
1064 N. Warren
Helena, MT 59601
Phone (406) 449-3303

RPA
602 S. Ferguson Ave. STE 5
Bozeman, MT 59718
Phone (406) 284-2110

Owner: City Of Missoula

Project Title: Garden City Compost Facility Improvements

Sheet Title: **Pre-Compost Containment Bin Mixer Discharge Details**

Sheet: **S-14**

X:\MISSOULA COMPOST\DESIGN\DRAWINGS\Sheets\8 - Structural\S-14 Pre-Compost Containment Bin Details.dwg SAVED: 2/17/25 PRINTED: 2/18/25 BY: ADAM

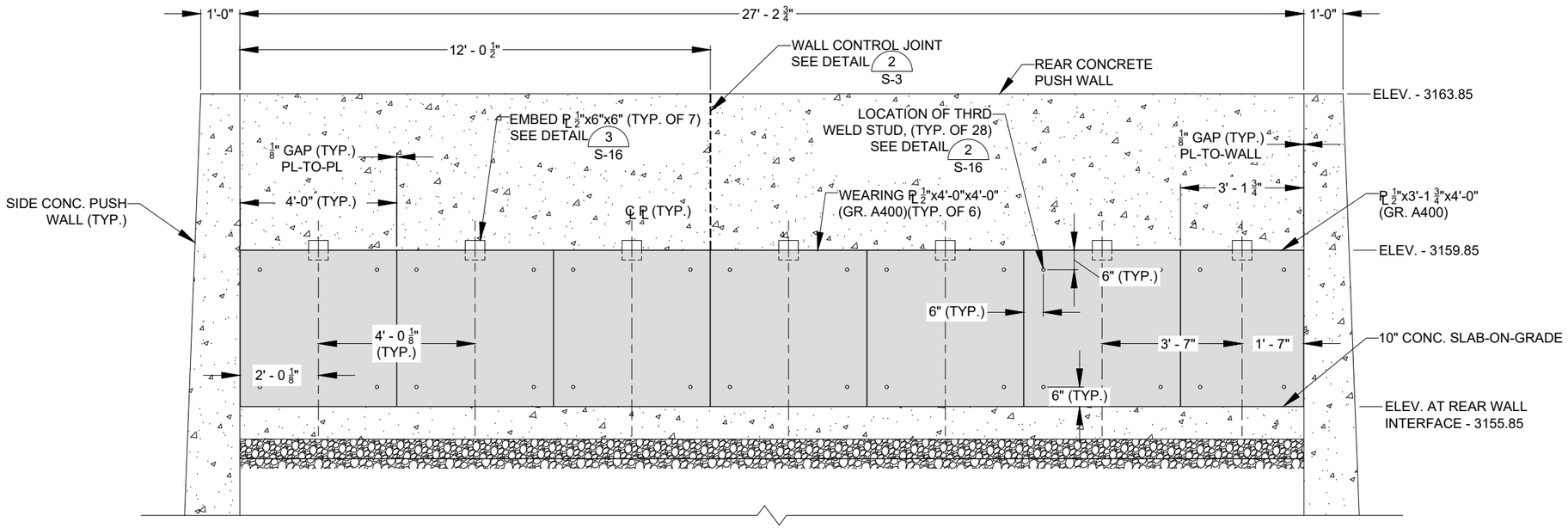

Biosolids Bin Rear Push Wall Elevation (1 / S-15)

NO SCALE

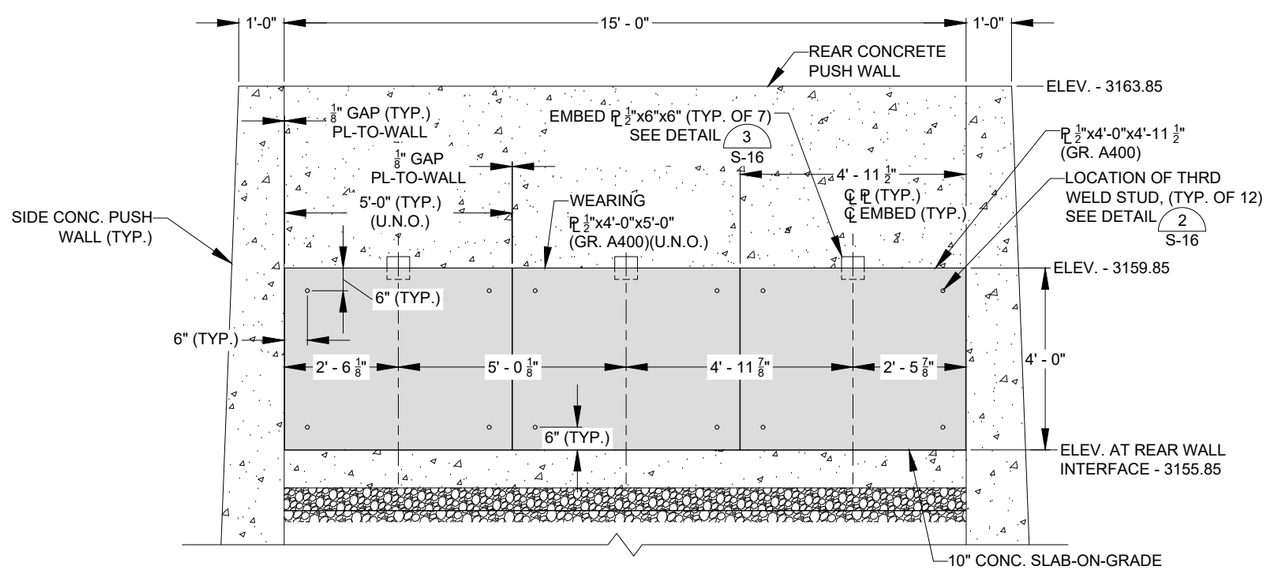

Pre-Compost Containment Bin Rear Push Wall Elevation (2 / S-15)

NO SCALE

MONTANA
TYLER R. JIRGES
No. 87469 PE
LICENSED PROFESSIONAL ENGINEER

Revision	Date	By
30% Draft	8/1/24	AE
60% Draft	11/18/24	AE
90% Draft	1/31/25	AE
Final	2/14/25	AE

Revision: Final
Plot Scale: 1:2
Drawn By: A. Eckhart, P.E.
Drawn By: E. Swanson
Approved By: Matt Miller, P.E.
Checked By: Tyler Jirges, P.E.
Designed By: Tyler Jirges, P.E.

Engineer
Anderson~Montgomery CONSULTING ENGINEERS
1064 N. Warren
Helena, MT 59601
Phone (406) 449-3303

RPA
602 S. Ferguson Ave. STE 5
Bozeman, MT 59718
Phone (406) 284-2110

Owner: City Of Missoula

Project Title: Garden City Compost Facility Improvements

Sheet Title: **Biosolids & Pre-Compost Mixing Bin Wall Elevations**

Sheet: **S-15**

X:\MISSOULA COMPOST\DESIGN\DRAWINGS\Sheets\8 – Structural\S-15 Biosolids & Pre-Compost Mixing Bin Wall Elevations.dwg SAVED: 2/14/25 PRINTED: 2/18/25 BY: ADAM

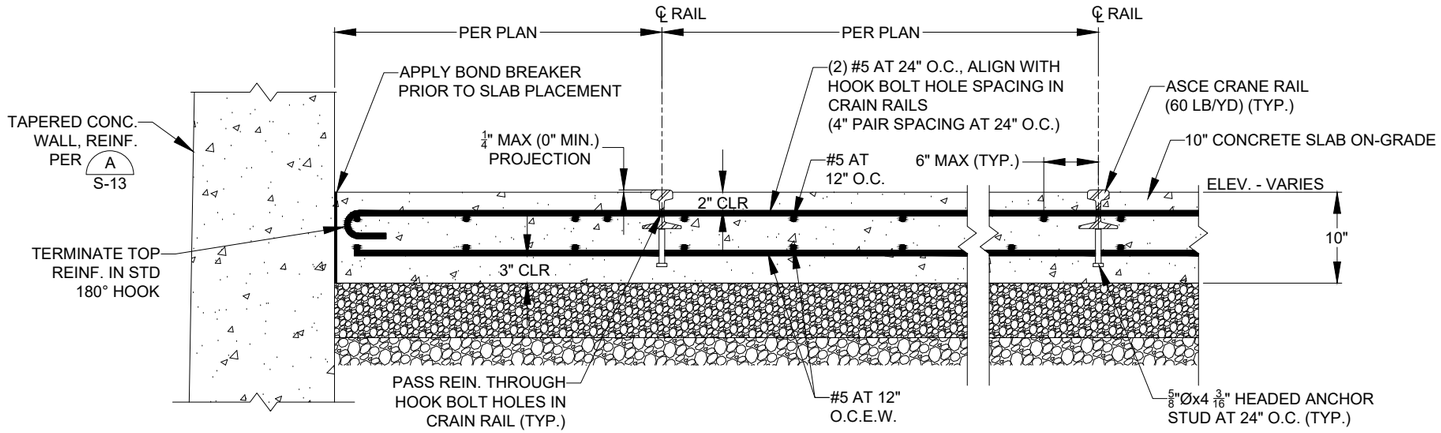

Biosolids/Pre-Compost Slab Section (1 / S-16)

NO SCALE

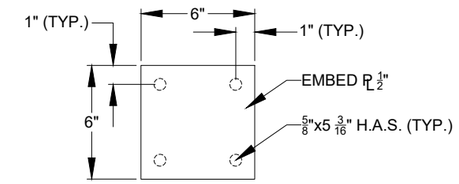

EMBED PLATE ELEVATION

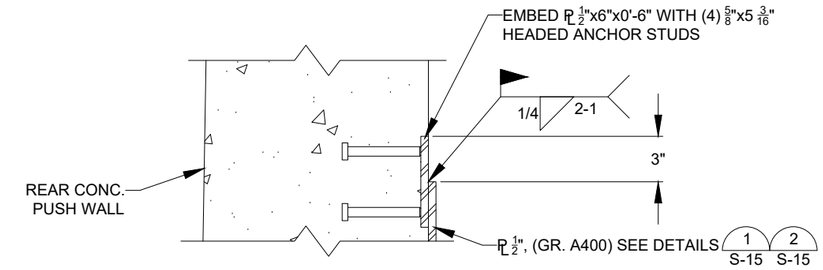

Biosolids/Pre-Compost Bin Embed Plate Detail (3 / S-16)

NO SCALE

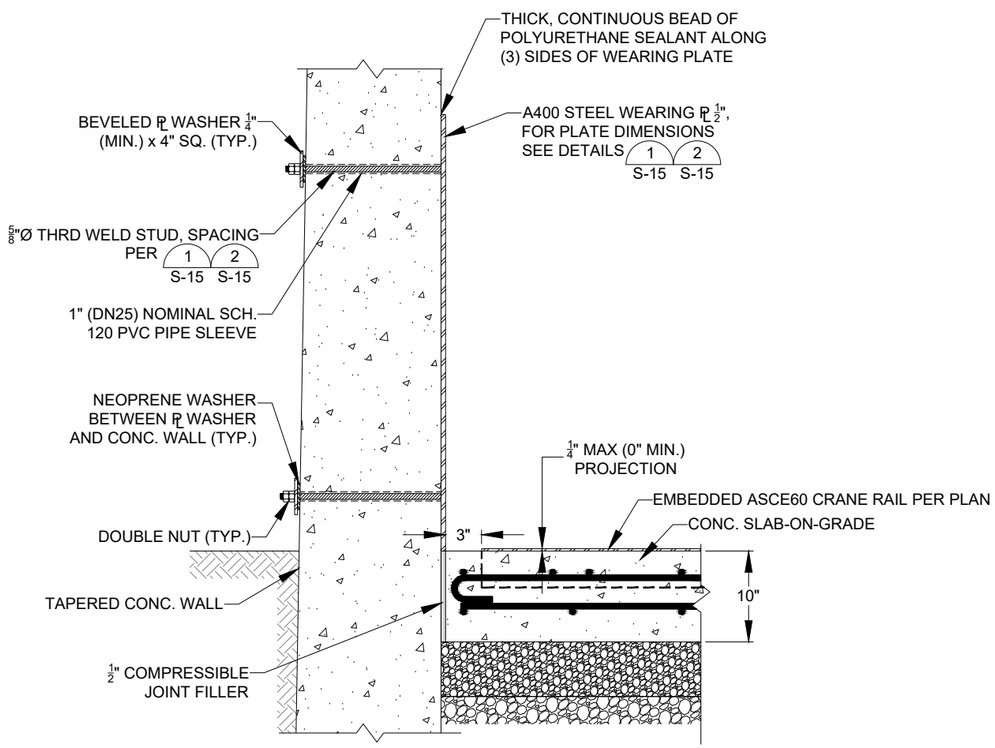

Biosolids/Pre-Compost Backwall Plate Detail (2 / S-16)

NO SCALE

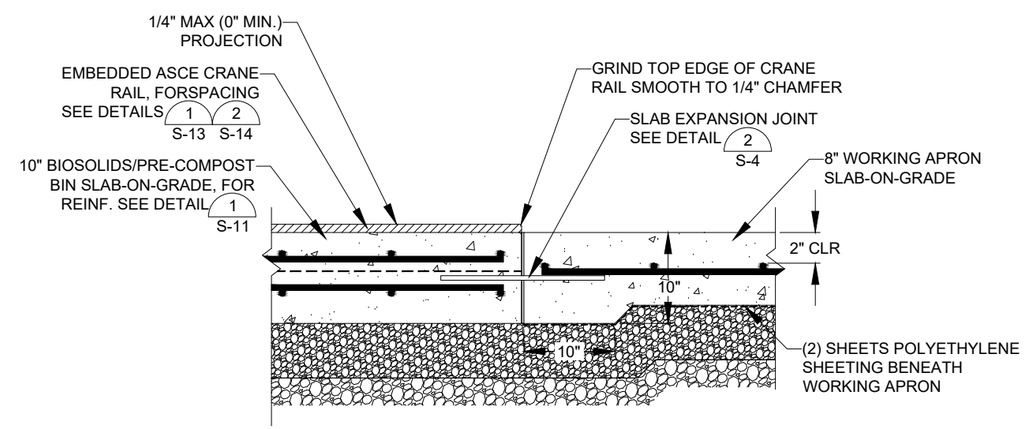

Biosolids/Pre-Compost Bin Expansion Joint At Working Apron Slab (4 / S-16)

NO SCALE

MONTANA TYLER R. JIRGES No. 87469 PE LICENSED PROFESSIONAL ENGINEER

Revision	Date	By
30% Draft	8/1/24	AE
60% Draft	11/18/24	AE
90% Draft	1/31/25	AE
Final	2/14/25	AE

Revision: Final
Plot Scale: 1:2
Drawn By: A. Eckhart, P.E.
Drawn By: E. Swanson
Approved By: Matt Miller, P.E.
Checked By: Tyler Jirges, P.E.
Designed By: Tyler Jirges, P.E.

Engineer
Anderson~Montgomery CONSULTING ENGINEERS
1064 N. Warren
Helena, MT 59601
Phone (406) 449-3303

RPA
602 S. Ferguson Ave. STE 5
Bozeman, MT 59718
Phone (406) 284-2110

Owner: City Of Missoula

Project Title: Garden City Compost Facility Improvements

Sheet Title: **Biosolids & Pre-Compost Mixing Bin Details**

Sheet: **S-16**

X:\MISSOULA COMPOST\DESIGN\DRAWINGS\Sheets\8 - Structural\S-16 Biosolids & Pre-Compost Mixing Bin Details.dwg SAVED: 2/19/25 PRINTED: 2/19/25 BY: ADAM

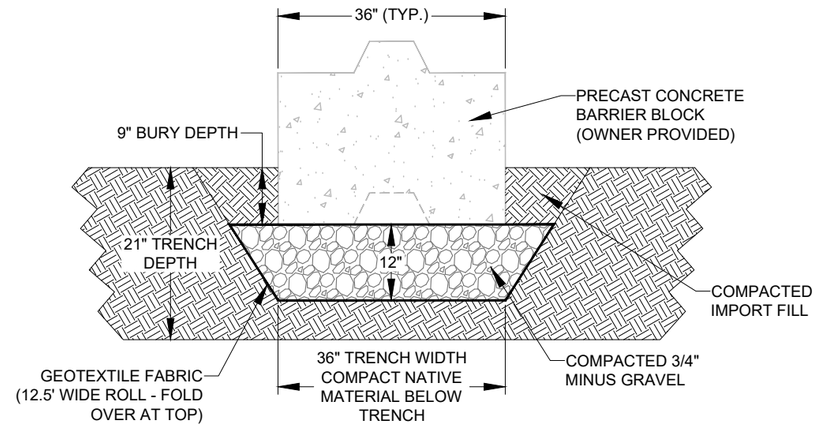

Concrete Block Wall Section (A) C-6,M-24

1 0.5 0 1 2 Feet

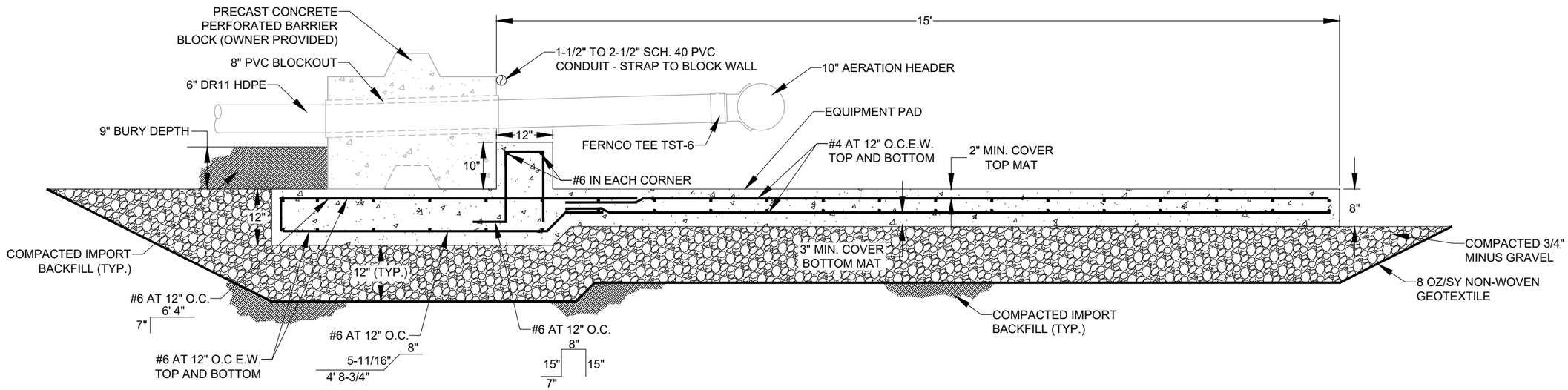

Curing Back Push Wall Section (B) C-6,M-24

1 0.5 0 1 2 Feet

Revision	Date	By
30% Draft	8/1/24	AE
60% Draft	11/18/24	AE
90% Draft	1/31/25	AE
Final	2/14/25	AE

Revision: Final
Plot Scale: 1:2
Drawn By: A.Eckhart, P.E.
Approved By: P.Montgomery, P.E.
Checked By: A.Eckhart, P.E.
Designed By: P.Montgomery, P.E.

Engineer:
Anderson~Montgomery CONSULTING ENGINEERS
1064 N. Warren
Helena, MT 59601
Phone (406) 449-3303

Owner: City Of Missoula

Project Title: Garden City Compost Facility Improvements

Sheet Title: **Curing Wall Details**

Sheet: **S-17**

X:\MISSOULA COMPOST\DESIGN\DRAWINGS\Sheets\8 – Structural\S-17 Curing Wall Details.dwg SAVED: 2/7/25 PRINTED: 2/14/25 BY: ADAM

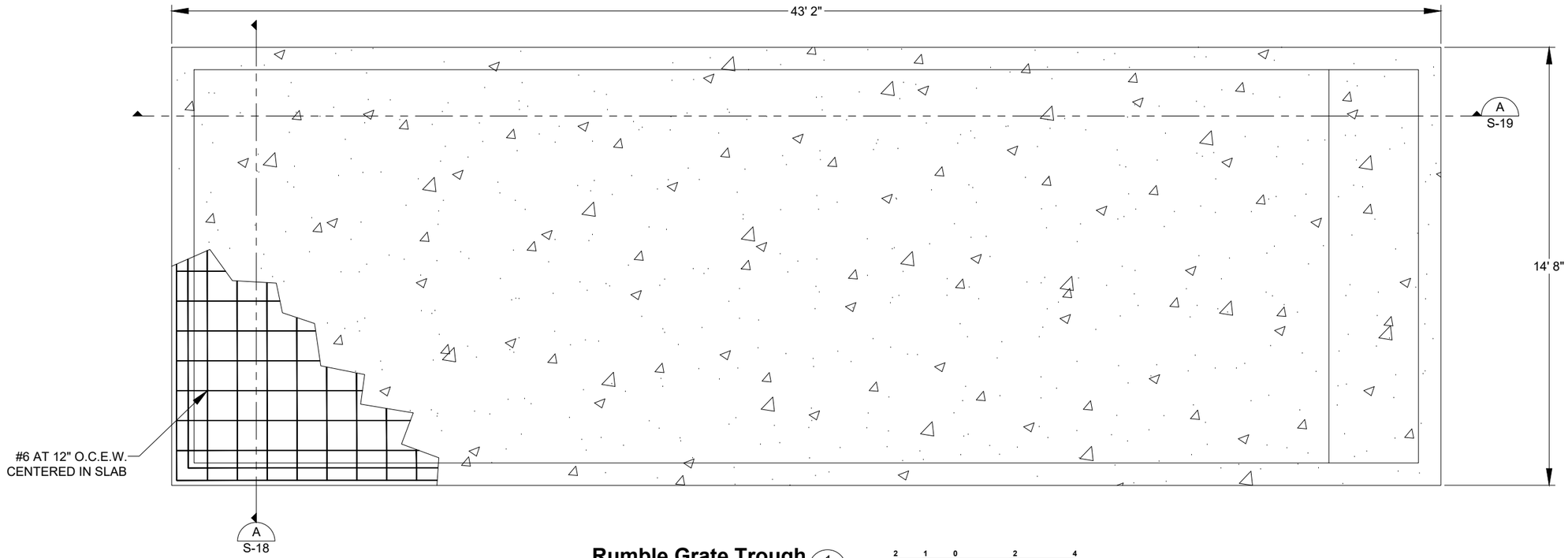

Rumble Grate Trough (1 / C-5)

2 1 0 2 4
Feet

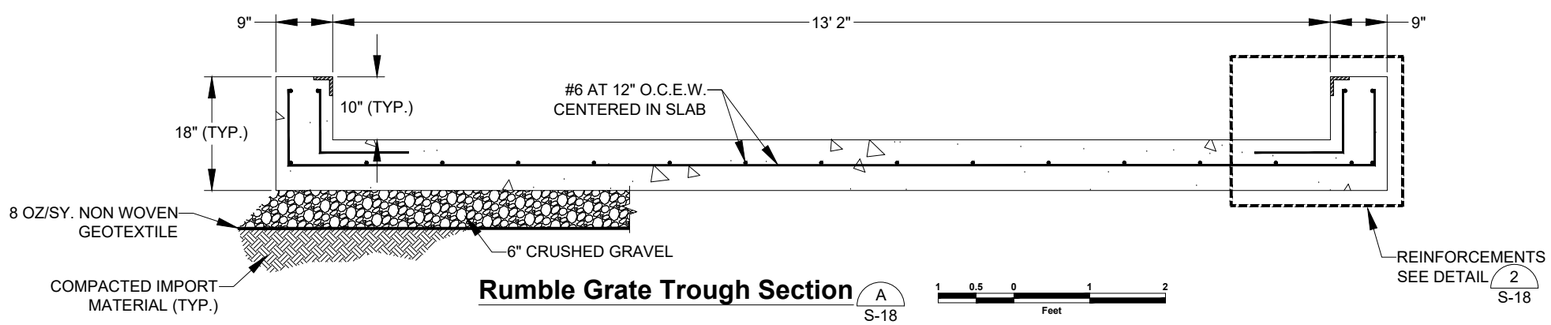

Rumble Grate Trough Section (A / S-18)

1 0.5 0 1 2
Feet

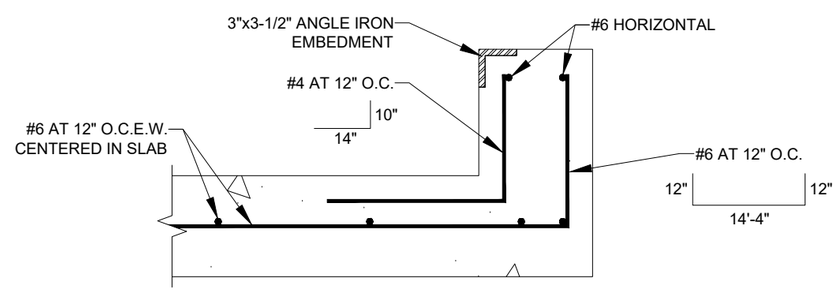

Rumble Grate Trough Detail (2 / S-18)

0.5 0.25 0 0.5 1
Feet

Revision	Date	By
30% Draft	8/1/24	AE
60% Draft	11/18/24	AE
90% Draft	1/31/25	AE
Final	2/14/25	AE

Revision: Final
Plot Scale: 1:2
Drawn By: A.Eckhart, P.E.
Approved By: P.Montgomery, P.E.
Checked By: A.Eckhart, P.E.
Designed By: P.Montgomery, P.E.

Engineer
Anderson~Montgomery
CONSULTING ENGINEERS
1064 N. Warren
Helena, MT 59601
Phone (406) 449-3303

Owner: City Of Missoula

Project Title: Garden City Compost Facility Improvements

Sheet Title: **Rumble Grate Trough**

Sheet: **S-18**

X:\MISSOULA COMPOST\DESIGN\DRAWINGS\Sheets\8 – Structural\S-18 & S-19 Rumble Grate Trough.dwg SAVED: 2/11/25 PRINTED: 2/14/25 BY: ADAM

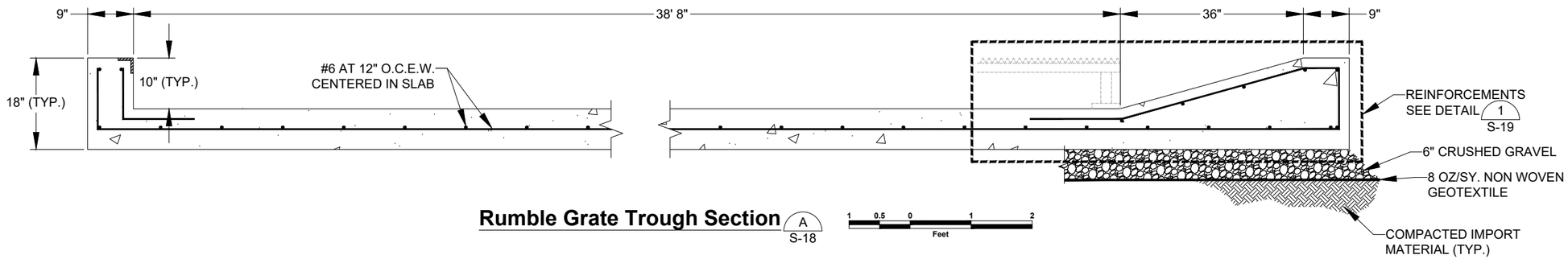

Rumble Grate Trough Section A S-18

1 0.5 0 1 2
Feet

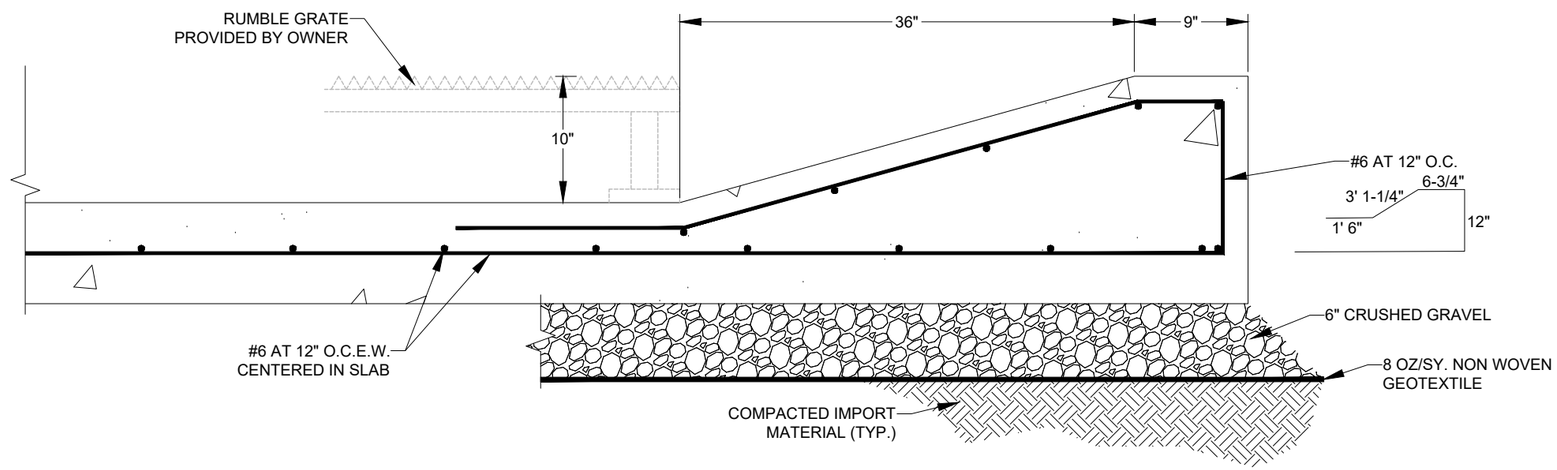

Rumble Grate Trough Detail 1 S-19

0.5 0.25 0 0.5 1
Feet

Revision	Date	By
30% Draft	8/1/24	AE
60% Draft	11/18/24	AE
90% Draft	1/31/25	AE
Final	2/14/25	AE

Revision: Final
Plot Scale: 1:2
Drawn By: A.Eckhart, P.E.
Approved By: P.Montgomery, P.E.
Checked By: A.Eckhart, P.E.
Designed By: P.Montgomery, P.E.

Engineer

Anderson~Montgomery
CONSULTING ENGINEERS
1064 N. Warren
Helena, MT 59601
Phone (406) 449-3303

Owner: City Of Missoula

Project Title: Garden City Compost Facility Improvements

Sheet Title: **Rumble Grate Trough Details**

Sheet: **S-19**

X:\MISSOULA COMPOST\DESIGN\DRAWINGS\Sheets\8 – Structural\S-18 & S-19 Rumble Grate Trough.dwg SAVED: 2/11/25 PRINTED: 2/14/25 BY: ADAM

PANEL SCHEDULE — PANEL NAME: MDP

LOCATION: | SOURCE: | AIC RATING: 14K | MOUNTING: SURFACE

CKT NO.	DESCRIPTION	BREAKER AMP	BREAKER POLE	REF. NOTE	LTG.	REC'S	LOAD TYPE (VA) MOTOR	EQUIP	HEATING	COOLING	VA	AMPS
1	PANEL E VIA ATS	60	3		300	0	8,331	0	0	0	8,631	31.2
3	-	**	*		0	0	8,331	1,000	0	0	9,331	33.7
5	-	**	*		0	0	8,331	0	0	0	8,331	30.1
7	SPARE	30	3								0	0.0
9	-	**	*								0	0.0
11	-	**	*								0	0.0
13	SPARE	20	3								0	0.0
15	-	**	*								0	0.0
17	-	**	*								0	0.0
19	PANEL C1	40	2		0	360	1,440	550	0	0	2,350	8.5
21		**	*		0	1,080	1,440	1,400	0	0	3,920	14.2
23	SPARE	20	1								0	0.0
25	SPARE	20	3								0	0.0
27	-	**	*								0	0.0
29	-	**	*								0	0.0
2	BAY 1-6 DRIVE CABINET	100	3				18,268				18,268	65.9
4	-	**	*				18,268				18,268	65.9
6	-	**	*				18,268				18,268	65.9
8	BAY 7-12 DRIVE CABINET	100	3				18,268				18,268	65.9
10	-	**	*				18,268				18,268	65.9
12	-	**	*				18,268				18,268	65.9
14	BIOFILTER DRIVE CABINET	225	3				42,627				42,627	153.9
16	-	**	*				42,627				42,627	153.9
18	-	**	*				42,627				42,627	153.9
20	CURING SHED PANEL CUR	200	3		0	180	28,808	0	2,500	0	31,488	113.7
22	-	**	*		0	0	28,958	0	2,500	0	31,458	113.6
24	-	**	*		0	0	28,808	0	0	0	28,808	104.0
26	225/3 SPACE										0	0.0
28	-										0	0.0
30	-										0	0.0

PANEL DATA

AMPERAGE:	600
VOLTAGE:	277/480
PHASE:	3
WIRE:	4
MAINS:	REF. NOTE
CKT. BKR.	600A MCB
LUGS ONLY	-
GROUND BUSS	
EQUIPMENT:	YES
ISOLATED:	-
NEUTRAL BUSSING	
100%	YES
200%	-
BUSSING	
COPPER:	YES
ALUMINUM:	-
TOP FEED:	-
BOTTOM FEED:	-
FEED THRU LUGS:	-
SUB FEED LUGS:	-
CONNECTED TOTALS (INCLUDES FEED-THRU CONTRIBUTION)	

LOAD	KVA	AMPS
LIGHTING:	0.3	0.4
RECEPTACLES:	1.6	1.9
MOTOR:	351.9	423.3
EQUIPMENT:	3.0	3.5
HEATING:	5.0	6.0
COOLING:	0.0	0.0
TOTALS	361.8	435.2

PHASE	KVA	AMPS
A:	121.6	439.1
B:	123.9	447.2
C:	116.3	419.9
TOTAL	361.8	

FEEDER DEMAND TOTALS

LOAD	KVA	AMPS
LIGHTING:	0.4	0.5
RECEPTACLES:	1.6	1.9
MOTOR:	351.9	423.3
EQUIPMENT:	3.0	3.5
HEAT/COOL:	5.0	6.0
LARGEST MOTOR:		0.0
TOTAL	361.9	435.3

REFERENCE NOTES:
1
2
3
4

DATE: 02/08/25

PANEL SCHEDULE — PANEL NAME: C1

CTA ENGINEERS | LOCATION: | SOURCE: | AIC RATING: 10,000 | MOUNTING: SURFACE

CKT NO.	DESCRIPTION	BREAKER AMP	BREAKER POLE	REF. NOTE	LTG.	REC'S	LOAD TYPE (VA) MOTOR	EQUIP	HEATING	COOLING	VA	AMPS
1	SPARE	20	1								0	0.0
3	RECEPTACLES	20	1			720					720	6.0
5	RECEPTACLES	20	1			360					360	3.0
7	DATA RACK	20	1			360					360	3.0
9	BLOWER PANEL CONTROLS	20	1				200.00				200	1.7
11	BLOWER PANEL CONTROLS	20	1				200.00				200	1.7
13	BLOWER PANEL CONTROLS	20	1				200.00				200	1.7
15	SPARE	20	1								0	0.0
17	IRRIGATION WELL PUMP	25	2				1,440				1,440	12.0
19	-	**	*				1,440				1,440	12.0
21	SPACE										0	0.0
23	SPACE										0	0.0
2	SPARE	20	1								0	0.0
4	GENERATOR BLOCK HEATER	20	1					1,200			1,200	10.0
6	GENERATOR BATTERY CHARGER	20	1					150			150	1.3
8	AC UNIT	30	2								0	0.0
10	-	**	*								0	0.0
12	SPARE	20	1								0	0.0
14	SPARE	20	1								0	0.0
16	SPARE	20	1								0	0.0
18	SPACE										0	0.0
20	SPACE										0	0.0
22	SPACE										0	0.0
24	SPACE										0	0.0
26											0	0.0
28											0	0.0
30											0	0.0
32											0	0.0
34											0	0.0
36											0	0.0
38											0	0.0
40											0	0.0
42											0	0.0

REFERENCE NOTES:
1
2

PANEL DATA

AMPERAGE:	100
VOLTAGE:	120/240
PHASE:	1
WIRE:	3
MAINS	REF. NOTE
CKT. BKR	100 AMP MCB
LUGS ONLY	
GROUND BUSS	
EQUIPMENT:	YES
ISOLATED:	-
NEUTRAL BUSSING	
100%	YES
200%	-
BUSSING	
COPPER:	-
ALUMINUM:	YES
TOP FEED:	-
BOTTOM FEED:	-
FEED THRU LUGS:	-
SUB FEED LUGS:	-
CONNECTED TOTALS (INCLUDES FEED-THRU CONTRIBUTION)	

LOAD	KVA	AMPS
LIGHTING:	0.0	0.0
RECEPTACLES:	1.4	6.0
MOTOR:	2.9	12.0
EQUIPMENT:	2.0	8.1
HEATING:	0.0	0.0
COOLING:	0.0	0.0
TOTALS	6.3	26.1

PHASE	KVA	AMPS
A:	2.4	19.6
B:	3.9	32.7
TOTAL	6.3	

FEEDER DEMAND TOTALS

LOAD	KVA	AMPS
LIGHTING:	0.0	0.0
RECEPTACLES:	1.4	6.0
MOTOR:	2.9	12.0
EQUIPMENT:	2.0	8.1
HEAT/COOL:	0.0	0.0
LARGEST MOTOR:		0.0
TOTAL	6.3	26.1

DATE: 02/08/25

PANEL SCHEDULE — PANEL NAME: CUR

LOCATION: | SOURCE: | AIC RATING: 14K | MOUNTING: SURFACE

CKT NO.	DESCRIPTION	BREAKER AMP	BREAKER POLE	REF. NOTE	LTG.	REC'S	LOAD TYPE (VA) MOTOR	EQUIP	HEATING	COOLING	VA	AMPS
1	BLOWER MOTOR VFD	80	3				14,404				14,404	52.0
3	-	**	*				14,404				14,404	52.0
5	-	**	*				14,404				14,404	52.0
7	BLOWER MOTOR VFD	80	3				14,404				14,404	52.0
9	-	**	*				14,404				14,404	52.0
11	-	**	*				14,404				14,404	52.0
13	PANEL CUR-1	30	2			180.00		2,500.00			2,680	9.7
15	-						150	2,500.00			2,650	9.6
17	20/1 SPACE										0	0.0
19	20/3 SPACE										0	0.0
21	-										0	0.0
23	-										0	0.0
25	20/3 SPACE										0	0.0
27	-										0	0.0
29	-										0	0.0
2	20/3 SPACE										0	0.0
4	-										0	0.0
6	-										0	0.0
8	20/3 SPACE										0	0.0
10	-										0	0.0
12	-										0	0.0
14	20/3 SPACE										0	0.0
16	-										0	0.0
18	-										0	0.0
20	20/3 SPACE										0	0.0
22	-										0	0.0
24	-										0	0.0
26	20/3 SPACE										0	0.0
28	-										0	0.0
30	-										0	0.0

PANEL DATA

AMPERAGE:	200
VOLTAGE:	277/480
PHASE:	3
WIRE:	4
MAINS	REF. NOTE
CKT. BKR.	200A MCB
LUGS ONLY	-
GROUND BUSS	
EQUIPMENT:	YES
ISOLATED:	-
NEUTRAL BUSSING	
100%	YES
200%	-
BUSSING	
COPPER:	YES
ALUMINUM:	-
TOP FEED:	-
BOTTOM FEED:	-
FEED THRU LUGS:	-
SUB FEED LUGS:	-
CONNECTED TOTALS (INCLUDES FEED-THRU CONTRIBUTION)	

LOAD	KVA	AMPS
LIGHTING:	0.0	0.0
RECEPTACLES:	0.2	0.2
MOTOR:	86.6	104.1
EQUIPMENT:	0.0	0.0
HEATING:	5.0	6.0
COOLING:	0.0	0.0
TOTALS	91.8	110.4

PHASE	KVA	AMPS
A:	31.5	113.7
B:	31.5	113.6
C:	28.8	104.0
TOTAL	91.8	

FEEDER DEMAND TOTALS

LOAD	KVA	AMPS
LIGHTING:	0.0	0.0
RECEPTACLES:	0.2	0.2
MOTOR:	86.6	104.1
EQUIPMENT:	0.0	0.0
HEAT/COOL:	5.0	6.0
LARGEST MOTOR:		0.0
TOTAL	91.8	110.4

REFERENCE NOTES:
1
2
3
4

DATE: 02/08/25

PANEL SCHEDULE — PANEL NAME: E

LOCATION: | SOURCE: | AIC RATING: 14K | MOUNTING: SURFACE

CKT NO.	DESCRIPTION	BREAKER AMP	BREAKER POLE	REF. NOTE	LTG.	REC'S	LOAD TYPE (VA) MOTOR	EQUIP	HEATING	COOLING	VA	AMPS
1	LIFT STATION GRINDER PUMP	20	3				581				581	2.1
3	-	**	*				581				581	2.1
5	-	**	*				581				581	2.1
7	LIFT STATION	40	3				7,750				7,750	28.0
9	-	**	*				7,750				7,750	28.0
11	-	**	*				7,750				7,750	28.0
13	LIGHTING	20	1		300						300	1.1
15	PLC PANEL	20	1					1,000			1,000	3.6
17	SPARE	20	1								0	0.0
19	20/3 SPACE										0	0.0
21	-										0	0.0
23	-										0	0.0
25	20/3 SPACE										0	0.0
27	-										0	0.0
29	-										0	0.0
2	20/3 SPACE										0	0.0
4	-										0	0.0
6	-										0	0.0
8	20/3 SPACE										0	0.0
10	-										0	0.0
12	-										0	0.0
14	20/3 SPACE										0	0.0
16	-										0	0.0
18	-										0	0.0
20	20/3 SPACE										0	0.0
22	-										0	0.0
24	-										0	0.0
26	20/3 SPACE										0	0.0
28	-										0	0.0
30	-										0	0.0

PANEL DATA

AMPERAGE:	100
VOLTAGE:	277/480
PHASE:	3
WIRE:	4
MAINS	REF. NOTE
CKT. BKR.	60A MCB
LUGS ONLY	-
GROUND BUSS	
EQUIPMENT:	YES
ISOLATED:	-
NEUTRAL BUSSING	
100%	YES
200%	-
BUSSING	
COPPER:	YES
ALUMINUM:	-
TOP FEED:	-
BOTTOM FEED:	-
FEED THRU LUGS:	-
SUB FEED LUGS:	-
CONNECTED TOTALS (INCLUDES FEED-THRU CONTRIBUTION)	

LOAD	KVA	AMPS
LIGHTING:	0.3	0.4
RECEPTACLES:	0.0	0.0
MOTOR:	25.0	30.1
EQUIPMENT:	1.0	1.2
HEATING:	0.0	0.0
COOLING:	0.0	0.0
TOTALS	26.3	31.6

PHASE	KVA	AMPS
A:	8.6	31.2
B:	9.3	33.7
C:	8.3	30.1
TOTAL	26.3	

FEEDER DEMAND TOTALS

LOAD	KVA	AMPS
LIGHTING:	0.4	0.5
RECEPTACLES:	0.0	0.0
MOTOR:	25.0	30.1
EQUIPMENT:	1.0	1.2
HEAT/COOL:	0.0	0.0
LARGEST MOTOR:		0.0
TOTAL	26.4	31.7

DATE: 02/08/25

LIGHTING FIXTURE SCHEDULE

TYPE	DESCRIPTION	FIXTURE MFG.	CATALOG NUMBER	VOLTS	WATTS	MOUNTING TYPE	MOUNTING HEIGHT
L1	4000 LUMEN 4FT LED STRIP LIGHT	LITHONIA	CSS-L48-4000LM-MVOLT-40K-80CRI	120/277V	35.3	SURFACE	CEILING
W1	LED WALL LIGHT WITH PHOTOCELL	LITHONIA	WPX1-LED-PZ-40K-MVOLT-DDBXD-M4	120/277V			

LEGEND

SYMBOL	ABBREVIATIONS & MISCELLANEOUS
a,b,c etc.	SWITCH DESIGNATION
AC	ABOVE COUNTER
AFF	ABOVE FINISHED FLOOR
AG	ABOVE GROUND
BN1L-2,4,6	CIRCUIT DESIGNATION, PANELBOARD BN1L, CIRCUITS 2, 4, 6
BOD	BOTTOM OF DEVICE
C	CONDUIT
COD	CENTER OF DEVICE
(E)	EXISTING
EC	ELECTRICAL CONTRACTOR
GC	GENERAL CONTRACTOR
GND	GROUND
GFI	GROUND FAULT CIRCUIT INTERRUPTER
MC	MECHANICAL CONTRACTOR
MTS	MANUAL TRANSFER SWITCH
(N)	NEW
NL	NIGHT LIGHT
NWE	NORTHWESTERN ENERGY
UG	UNDERGROUND
W/	WITH
WP	WEATHER PROOF
1/E5.2	INDICATES DETAIL 1 ON SHEET E5.2
1	SHEET WORK NOTE
	HOME RUN TO PANELS
	CONDUIT CONCEALED IN CEILING OR WALL
	CONDUIT CONCEALED UNDER FLOOR
	CIRCUIT, NUMBER OF HASH MARKS INDICATES NUMBER OF CONDUCTORS IN CABLE/RACEWAY. GROUND WIRE NOT SHOWN BUT SHALL BE INCLUDED. NO HASH MARKS INDICATES 2 CONDUCTORS PLUS GROUND.

SYMBOL	LIGHTING
	PENDANT OR SURFACE MOUNTED FLUORESCENT LIGHT FIXTURE, SIZE ON PLANS
	2 HEAD EMERGENCY LIGHT BATTERY PACK

SYMBOL	COMMUNICATIONS
	DATA JACK, (1) CAT 6 JACK

SYMBOL	DEVICES & POWER
$	SWITCH - SPST 3 THREE WAY 4 FOUR WAY C CALL IN D DIMMER K KEY OPERATED LV LOW VOLTAGE MC SPDT-MOMENTARY CONTACT MLV SPDT-LOW VOLTAGE, MOMENTARY CONTACT OS OCCUPANCY SENSOR P PILOT LIGHT WP WEATHERPROOF
	RECEPTACLE - SIMPLEX
	RECEPTACLE - DUPLEX
	GFI RECEPTACLE - DUPLEX (GROUND FAULT INTERRUPT) D DEVICE RECEPT W/2 USB PORTS DC DROP CORD WP WEATHERPROOF TR TAMPER RESISTANT S SURGE PROTECTED IG ISOLATED GROUND FILLED CENTER INDICATES HOSPITAL GRADE EMERGENCY RECEPTACLE
	RECEPTACLE - DOUBLE DUPLEX GFI RECEPTACLE - DOUBLE DUPLEX - SAME INDICATORS AS SHOWN FOR DUPLEX
	RECEPTACLE - 208V D DRYER R RANGE W WELDER * NEMA CONFIGURATION AS NOTED
	FLOOR 208V RECEPTACLE
	FLOOR DUPLEX RECEPTACLE
	FLOOR DOUBLE DUPLEX RECEPTACLE
J	J-BOX, J-BOX WALL MOUNTED, 4"x4"x2 1/8 " DEEP UNLESS NOTED OTHERWISE
PP	POWER POLE
T	THERMOSTAT BY MC, INSTALLED AND CONNECTED BY EC
T	THERMOSTAT BY MC, J-BOX & CONDUIT TO CEILING BY EC
$M	MANUAL MOTOR DISCONNECT/STARTER SWITCH
PB	PUSHBUTTON SWITCH SUPPLIED BY OTHERS, INSTALLED AND CONNECTED BY EC
DS	DOOR SWITCH SUPPLIED BY OTHERS, INSTALLED AND CONNECTED BY EC
TS	REMOTE TEST SWITCH
PP	POWER PACK
OS	OCCUPANCY SENSOR
	EMERGENCY PUSHBUTTON
R	RELAY
PC	PHOTOCELL
PC	PHOTOCELL, WALL MOUNTED
	SPECIAL PURPOSE CONNECTION, BOX INDICATES FLOOR MOUNTING, WORK AS NOTED
M	ELECTRIC MOTOR CONNECTION
	COMBINATION STARTER
	DISCONNECT SWITCH
	CONTACTOR
	CIRCUIT BREAKER
VFD	VARIABLE FREQUENCY DRIVE
	EXISTING PANELBOARD, SURFACE MOUNTED
	EXISTING PANELBOARD, FLUSH MOUNTED
	PANELBOARD, SURFACE MOUNTED
	PANELBOARD, FLUSH MOUNTED
	TRANSFORMER, DRY-TYPE
T	TRANSFORMER, PAD MOUNTED
	ELECTRIC METER, BUILDING MOUNTED
RC	ROOM CONTROLLER
XXX.X	FEEDER ID TAG

GENERAL NOTES

(APPLICABLE TO ALL SHEETS)

1. ALTHOUGH NOT SHOWN, ALL RACEWAYS SHALL BE EQUIPPED WITH AN EQUIPMENT GROUNDING CONDUCTOR.
2. THE CONDUCTOR SIZE CALLED OUT IN THE HOME RUN SHALL BE CARRIED THROUGHOUT THE ENTIRE CONDUIT.
3. DRAWINGS INDICATE GENERAL DIRECTIONS AND ROUTES OF FEEDERS, BRANCH CIRCUITS, AND SERVICE CONDUCTOR SYSTEMS. DETERMINE EXACT ROUTE AND INSTALLATION OF ELECTRICAL WIRING WITH CONDITIONS OF CONSTRUCTION.
4. PRIOR TO ROUGH-IN, COORDINATE EXACT LOCATIONS OF ALL DEVICES AND EQUIPMENT WITH ARCHITECTURAL ELEVATIONS, MILLWORK, REFLECTED CEILING PLAN, AND MECHANICAL EQUIPMENT.
5. OUTLET BOXES SHALL NOT BE MOUNTED BACK TO BACK. MAINTAIN MINIMUM LATERAL SEPARATIONS OF 24".
6. ALL EXISTING CONDITIONS ARE NOT SHOWN ON THE DRAWINGS. CONTRACTOR SHALL CAREFULLY EXAMINE THE EXISTING SITE AND BECOME FAMILIAR WITH THE EXISTING CONDITIONS. NO ADDITIONAL CHARGES WILL BE ALLOWED DUE TO THE LACK OF PRE-BID SITE EXAMINATION.
7. THE EXACT LOCATION OF ELECTRICAL EQUIPMENT SHALL BE COORDINATED WITH STRUCTURE AND MECHANICAL EQUIPMENT. ADJUST EQUIPMENT LOCATION AS REQUIRED TO MAINTAIN NEC WORKING CLEARANCES.
8. ALL SPARE CONDUIT SHALL CONTAIN A PULL CORD. EACH END OF THE CONDUIT SHALL HAVE A LABEL IDENTIFYING THE TERMINATION POINT OF THE OPPOSITE END OF THE CONDUIT.
9. COORDINATE EXACT LOCATION OF ALL WALL MOUNTED VOICE/DATA OUTLETS WITH POWER OUTLETS. ADJUST LOCATION OF ALL VOICE DATA OUTLETS SO THAT THEY ARE LOCATED AT THE SAME ELEV. AND OFFSET HORIZONTALLY 6".
10. CONTRACTOR IS RESPONSIBLE FOR LOCATING ALL EXISTING UNDERGROUND UTILITIES PRIOR TO EXCAVATION. ANY DAMAGE TO THE EXISTING UTILITIES SHALL BE REPAIRED AT THE CONTRACTORS EXPENSE.
11. ALL CIRCUITS SHALL CONTAIN A DEDICATED NEUTRAL CONDUCTOR. SHARED NEUTRAL CONDUCTOR IS NOT ALLOWED.
12. CONTRACTOR IS RESPONSIBLE FOR ALL TRENCHING, PATCHING, EXCAVATION, BACKFILL AND RESTORATION RELATED TO THEIR WORK.

MONTANA ALAN BRONEC 11707 PE LICENSED PROFESSIONAL ENGINEER

Revision	Date	By
30% Draft	8/1/24	AB
60% Draft	11/18/24	AB
90% Draft	1/31/25	AB
Final	2/14/25	AB

Revision: Final
Plot Scale: 1:1
Drawn By: S.Galli
Approved By: A.Bronec, P.E.
Checked By: A.Bronec, P.E.
Designed By: A.Bronec, P.E.

Engineer
Anderson–Montgomery CONSULTING ENGINEERS
1064 N. Warren
Helena, MT 59601
Phone (406) 449-3303

Cushing Terrell
306 Railroad St.
Missoula, MT 59802
Phone (406) 544-8565

Owner: City Of Missoula

Project Title: Garden City Compost Facility Improvements

Sheet Title: SCHEDULES AND LEGEND

Sheet: E-0

L:\MSLA_COMPOST\BIMCAD\Elec\MSST_E-0.dwg SAVED: 2/12/25 PRINTED: 2/12/25 BY: SCOTTGA

KEY NOTES

1. 4" CONDUIT FOR FEEDER FROM MSB-A TO MDP. SEE ONE-LINE DIAGRAM E-2.
2. 3" CONDUIT WITH FIBER FROM PLC IN CONTROL BUILDING TO DATA RACK IN SOLIDS HANDLING BUILDING.
3. LIFT STATION FEEDER TO MDP. SEE ONE-LINE DIAGRAM E-2.
4. 1.5" CONDUIT FOR FEEDER TO CURING PANEL "CUR".
5. PROVIDE (1) 3" SPARE CONDUIT WITH PULL CORD.
6. STUB UP AND CAP SPARE CONDUIT 1 FT ABOVE GRADE.
7. PROVIDE 1"C WITH 4 PAIR SHIELDED CABLE FOR LIFT STATION ALARM OUTPUTS TO PLC.

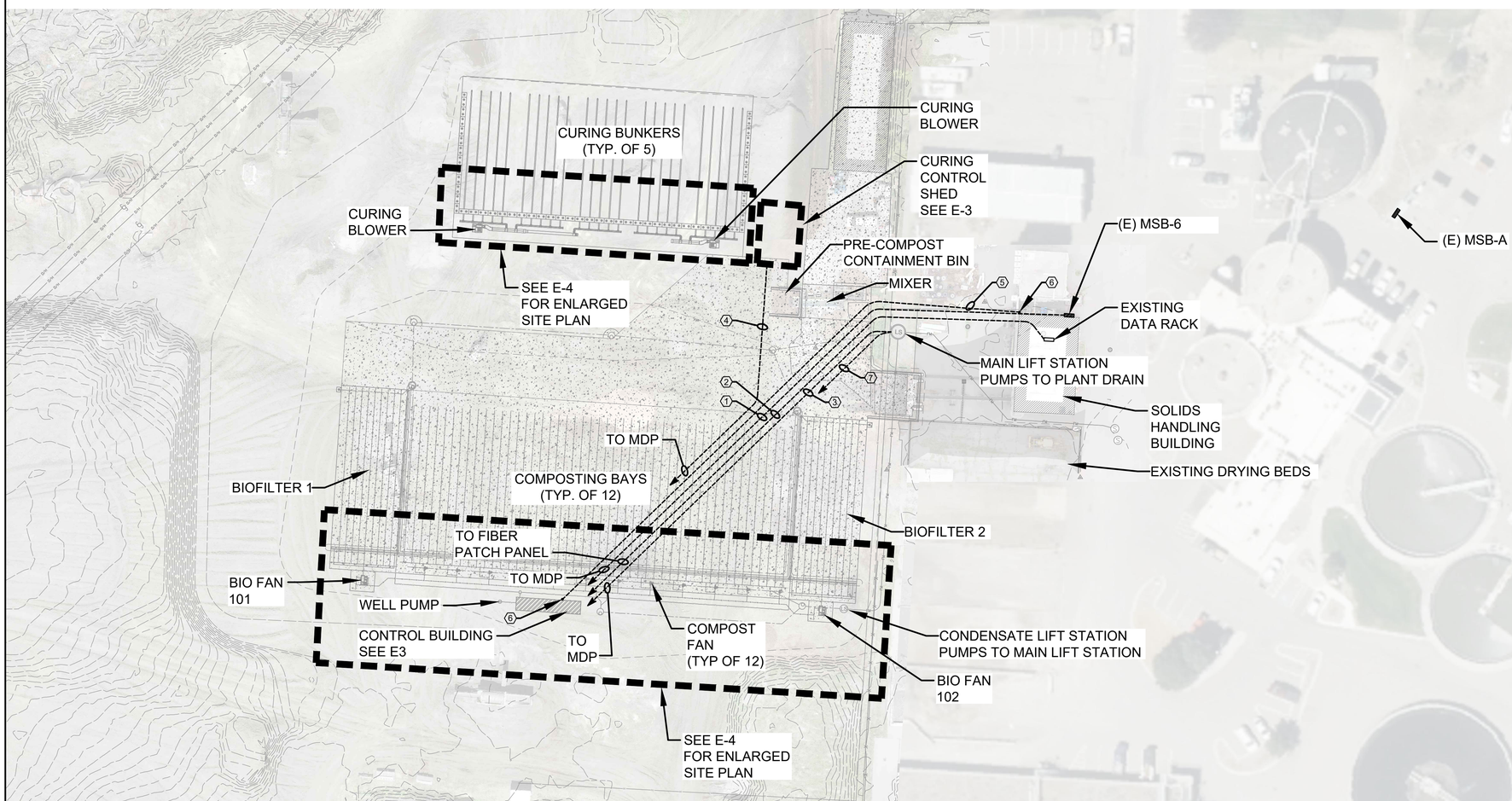

1 / E-1 OVERALL ELECTRICAL SITE PLAN

1" = 40'-0"

Revision	Date	By
30% Draft	8/1/24	AB
60% Draft	11/18/24	AB
90% Draft	1/31/25	AB
Final	2/14/25	AB

Revision: Final
Plot Scale: 1:1
Drawn By: S.Galli
Approved By: A.Bronec, P.E.
Checked By: A.Bronec, P.E.
Designed By: A.Bronec, P.E.

Engineer
Anderson~Montgomery CONSULTING ENGINEERS
1064 N. Warren
Helena, MT 59601
Phone (406) 449-3303

Cushing Terrell
306 Railroad St.
Missoula, MT 59802
Phone (406) 544-8565

Owner: City Of Missoula

Project Title: Garden City Compost Facility Improvements

Sheet Title: **OVERALL ELECTRICAL SITE PLAN**

Sheet: **E-1**

L:\MSLA_COMPOST\BIMCAD\Elec\MSST_E-1.dwg SAVED: 2/12/25 PRINTED: 2/12/25 BY: SCOTTGA

COPPER FEEDER SCHEDULE XXX.X

DESIGNATION	PARALLEL RUNS	# OF CONDUCTORS	CONDUCTOR SIZE	GROUND SIZE	SIZE OF CONDUIT
20.3	1	3	#12 CU	#12 CU	3/4"
20.4	1	4	#12 CU	#12 CU	3/4"
30.3	1	3	#10 CU	#10 CU	3/4"
30.4	1	4	#10 CU	#10 CU	3/4"
40.3	1	3	#8 CU	#10 CU	1
40.4	1	4	#8 CU	#10 CU	1"
50.3	1	3	#6 CU	#10 CU	1"
50.4	1	4	#6 CU	#10 CU	1"
60.3	1	3	#4 CU	#10 CU	1-1/4"
60.4	1	4	#4 CU	#10 CU	1-1/4"
70.3	1	3	#4 CU	#8 CU	1-1/4"
70.4	1	4	#4 CU	#8 CU	1-1/4"
80.3	1	3	#3 CU	#8 CU	1-1/4"
80.4	1	4	#3 CU	#8 CU	1-1/4"
90.3	1	3	#2 CU	#8 CU	1-1/4"
90.4	1	4	#2 CU	#8 CU	1-1/4"
100.3	1	3	#2 CU	#8 CU	1-1/4"
100.4	1	4	#2 CU	#8 CU	1-1/4"
125.3	1	3	#1 CU	#6 CU	1-1/2"
125.4	1	4	#1 CU	#6 CU	1-1/2"
150.3	1	3	1/0 CU	#6 CU	1-1/2"
150.4	1	4	1/0 CU	#6 CU	1-1/2"
175.3	1	3	2/0 CU	#6 CU	2"
175.4	1	4	2/0 CU	#6 CU	2"
200.3	1	3	3/0 CU	#6 CU	2"
200.4	1	4	3/0 CU	#6 CU	2"
225.3	1	3	4/0 CU	#4 CU	2-1/2"
225.4	1	4	4/0 CU	#4 CU	2-1/2"
250.3	1	3	250 CU	#4 CU	2-1/2"
250.4	1	4	250 CU	#4 CU	2-1/2"
300.3	1	3	350 CU	#4 CU	3"
300.4	1	4	350 CU	#4 CU	4"
350.3	2	3	500 CU	#3 CU	4"
350.4	2	4	500 CU	#3 CU	4"
400.3	2	3	3/0 CU	#3 CU	2"
400.4	2	4	3/0 CU	#3 CU	2"
450.4	2	4	4/0 CU	#2 CU	2-1/2"
500.4	2	4	250 CU	#2 CU	2-1/2"
600.4	2	4	350 CU	#1 CU	3"

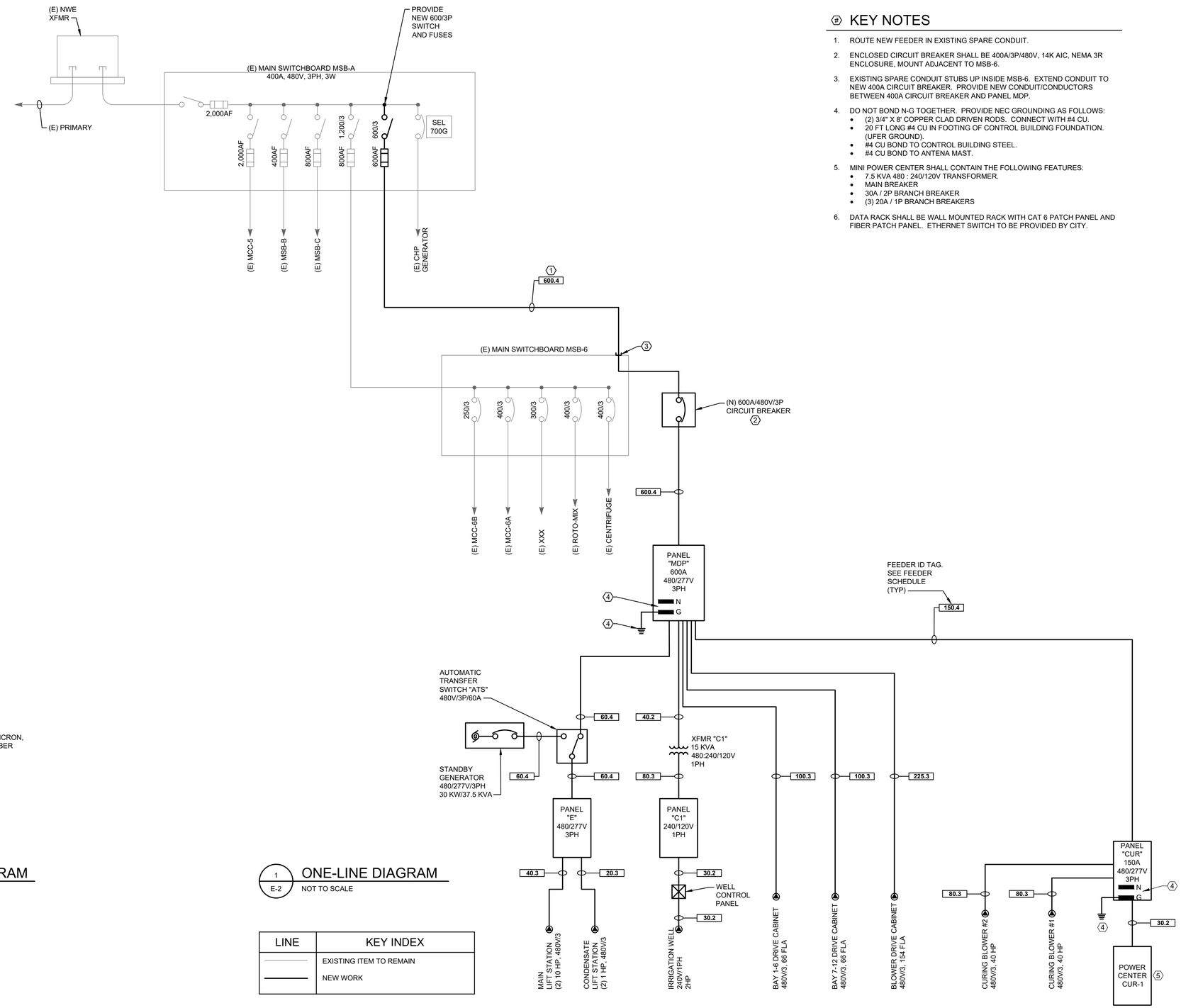

1 E-2 ONE-LINE DIAGRAM

NOT TO SCALE

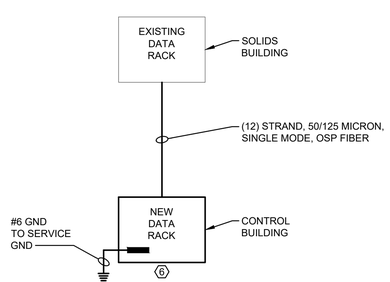

2 E-2 DATA SYSTEM ONE-LINE DIAGRAM

NOT TO SCALE

LINE	KEY INDEX
	EXISTING ITEM TO REMAIN
	NEW WORK

KEY NOTES

1. ROUTE NEW FEEDER IN EXISTING SPARE CONDUIT.
2. ENCLOSED CIRCUIT BREAKER SHALL BE 400A/3P/480V, 14K AIC, NEMA 3R ENCLOSURE, MOUNT ADJACENT TO MSB-6.
3. EXISTING SPARE CONDUIT STUBS UP INSIDE MSB-6. EXTEND CONDUIT TO NEW 400A CIRCUIT BREAKER. PROVIDE NEW CONDUIT/CONDUCTORS BETWEEN 400A CIRCUIT BREAKER AND PANEL MDP.
4. DO NOT BOND N-G TOGETHER. PROVIDE NEC GROUNDING AS FOLLOWS:
   - (2) 3/4" X 8' COPPER CLAD DRIVEN RODS. CONNECT WITH #4 CU.
   - 20 FT LONG #4 CU IN FOOTING OF CONTROL BUILDING FOUNDATION. (UFER GROUND).
   - #4 CU BOND TO CONTROL BUILDING STEEL.
   - #4 CU BOND TO ANTENA MAST.
5. MINI POWER CENTER SHALL CONTAIN THE FOLLOWING FEATURES:
   - 7.5 KVA 480 : 240/120V TRANSFORMER.
   - MAIN BREAKER
   - 30A / 2P BRANCH BREAKER
   - (3) 20A / 1P BRANCH BREAKERS
6. DATA RACK SHALL BE WALL MOUNTED RACK WITH CAT 6 PATCH PANEL AND FIBER PATCH PANEL. ETHERNET SWITCH TO BE PROVIDED BY CITY.

MONTANA ALAN BRONEC 11707 PE LICENSED PROFESSIONAL ENGINEER

Revision	Date	By
30% Draft	8/1/24	AB
60% Draft	11/18/24	AB
90% Draft	1/31/25	AB
Final	2/14/25	AB

Revision: Final
Plot Scale: 1:1
Drawn By: S.Galli
Approved By: A.Bronec, P.E.
Checked By: A.Bronec, P.E.
Designed By: A.Bronec, P.E.

Engineer
Anderson~Montgomery CONSULTING ENGINEERS
1064 N. Warren
Helena, MT 59601
Phone (406) 449-3303

Cushing Terrell
306 Railroad St.
Missoula, MT 59802
Phone (406) 544-8565

Owner
City Of Missoula

Project Title
Garden City Compost Facility Improvements

Sheet Title
ONE-LINE DIAGRAM

Sheet
E-2

L:\MSLA_COMPOST\BIMCAD\Elec\MSST_E-2.dwg SAVED: 2/11/25 PRINTED: 2/12/25 BY: SCOTTGA

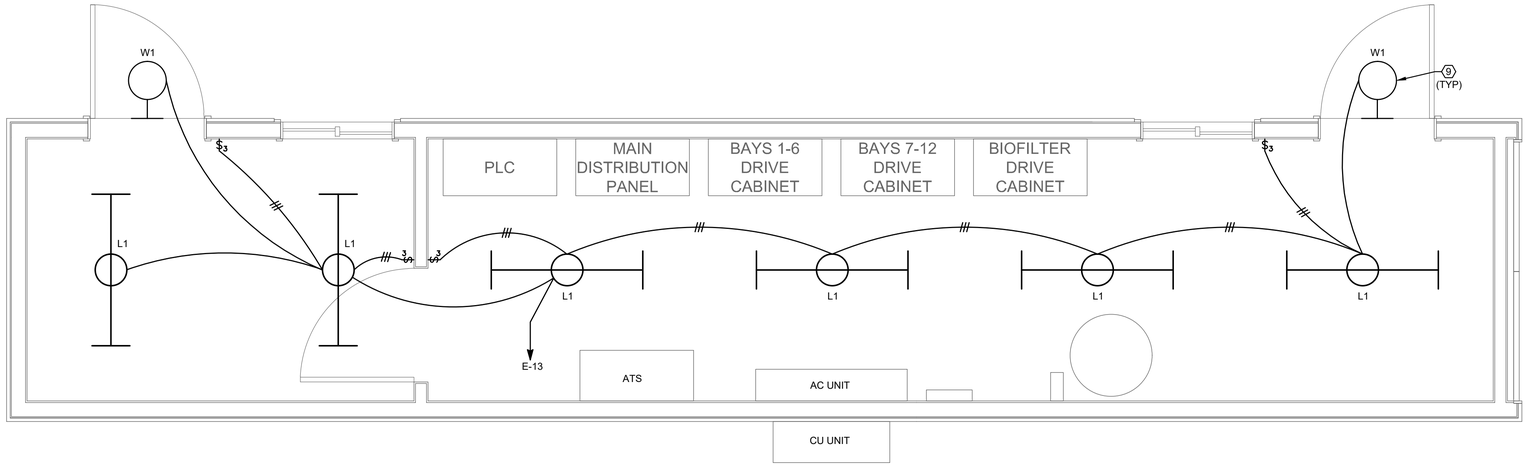

1 E-3 LIGHTING PLAN

1/2"=1'-0"

SCALE: 1/2" = 1'-0"

KEY NOTES

1. GENERATOR OUTPUT FEEDER.
2. 1"C WITH CONTROLS AS DIRECTED BY GENERATOR MFG.
3. GENERATOR BATTERY CHARGER AND BLOCK HEATER.
4. COORDINATE CONDUIT STUB-UP LOCATION WITH GENERATOR MFG.
5. PROVIDE ANTENA MAST CONSISTING OF 1.5" RIGID STEEL CONDUIT TERMINATED 10 FT ABOVE CONTROL BUILDING.
6. 1"C, (4) STRAND 50/125 MICRON, SM, CABLE TO DATA CABINET.
7. COORDINATE CONDUIT STUB-UP LOCATION WITH GENERATOR SHOP DRAWINGS. SEE CIVIL SITE PLAN FOR GENERATOR LOCATION.
8. 120V CONTROL POWER. SEE ONE-LINE FOR 480V FEEDER.
9. WALL LIGHT WITH PHOTO CELL AND MOTION SENSOR.
10. 1"C WITH (6) CAT6 CABLES TO PLC CABINET.
11. NEW ALLEN BRADLEY POWER FLEX 753 FOR CONTROL OF CURING BLOWER #1.
12. ALLEN BRADLEY POWER FLEX 753 FOR CONTROL OF CURING BLOWER #2. RELOCATED FROM OTHER AREA ON SITE.
13. PROVIDE 1,000 VA, 277 VOLT, PRIMARY/120 VOLT SECONDARY STEP DOWN TRANSFORMER/POWER SUPPLY FOR PLC.
14. GENERATOR REMOTE ANNUNCIATOR PANEL.
15. PROVIDE CONNECTION TO EXHAUST FAN AND LINE VOLTAGE REVERSE ACTING T-STAT.

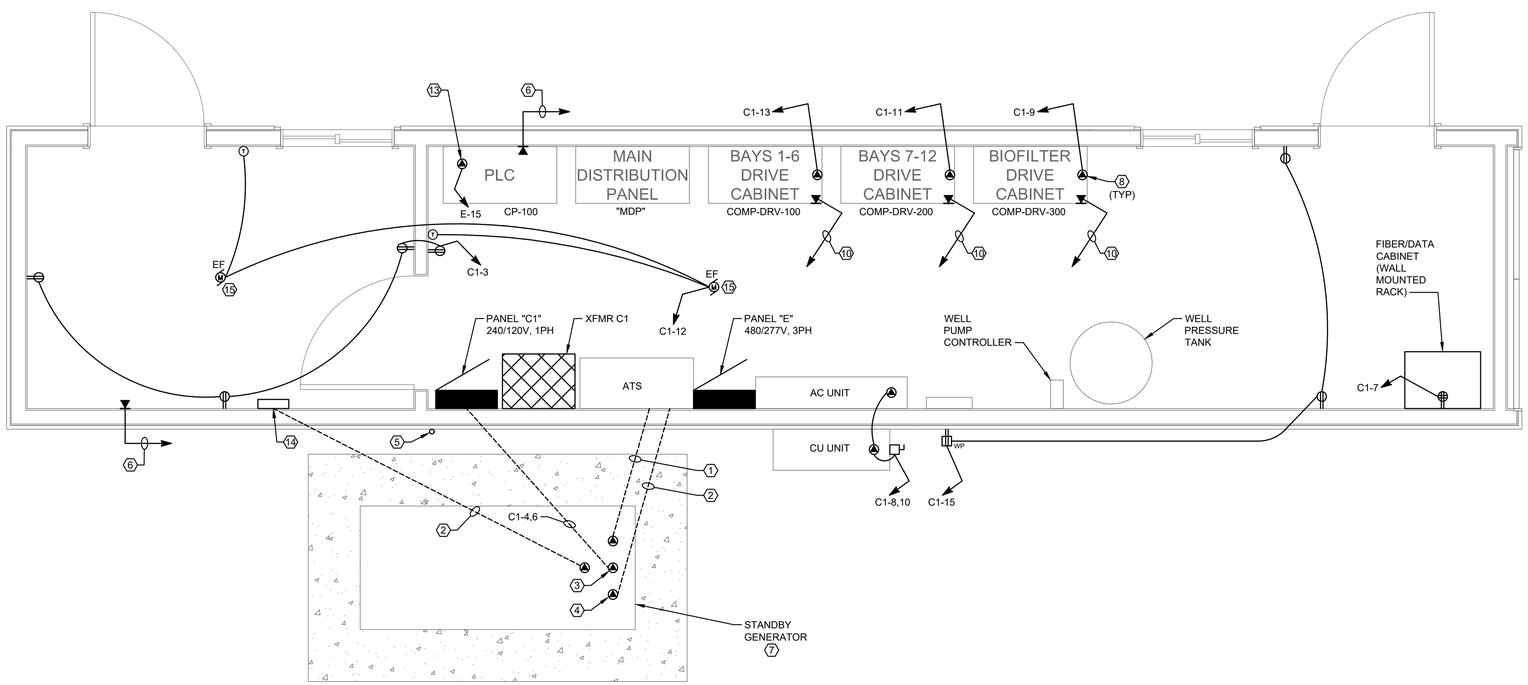

2 E-3 POWER/DATA PLAN

1/2"=1'-0"

SCALE: 1/2" = 1'-0"

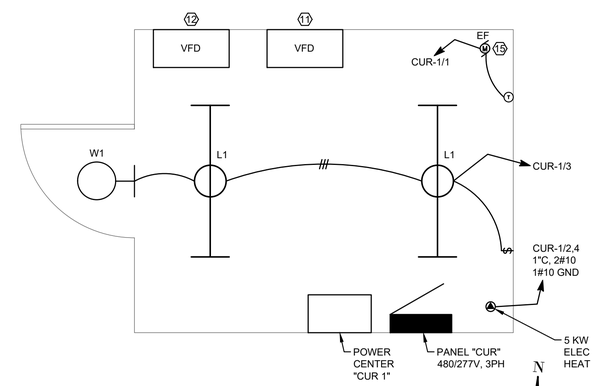

3 E-3 CURING CONTROL SHED ELEC PLAN

1/2"=1'-0"

SCALE: 1/2" = 1'-0"

Revision	Date	By
30% Draft	8/1/24	AB
60% Draft	11/18/24	AB
90% Draft	1/31/25	AB
Final	2/14/25	AB

Revision: Final

Plot Scale: 1:1

Drawn By: S.Galli

Approved By: A.Bronec, P.E.

Checked By: A.Bronec, P.E.

Designed By: A.Bronec, P.E.

Engineer

Anderson~Montgomery CONSULTING ENGINEERS

1064 N. Warren
Helena, MT 59601
Phone (406) 449-3303

Cushing Terrell

306 Railroad St.
Missoula, MT 59802
Phone (406) 544-8565

Owner: City Of Missoula

Project Title: Garden City Compost Facility Improvements

Sheet Title: **CONTROL BUILDING ELECTRICAL PLANS**

Sheet: **E-3**

L:\MSLA_COMPOST\BIMCAD\Elec\MSST_E-3.dwg SAVED:2/12/25 PRINTED:2/12/25 BY:SCOTTGA

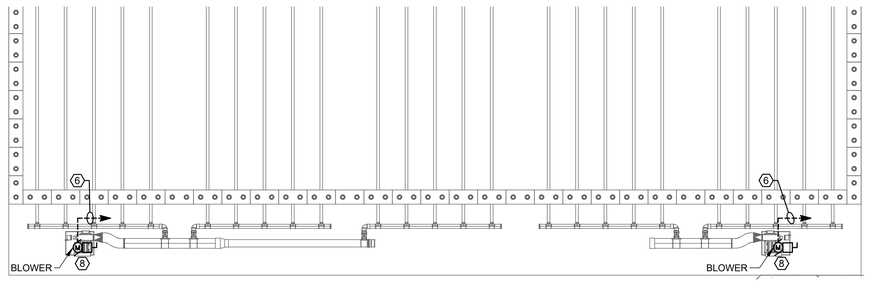

1 / E-4 CURING BUNKERS ELECTRICAL PLAN

1/16" = 1'-0"

0 8' 16' 32'

SCALE: 1/16" = 1'-0"

N

KEY NOTES

1. 1"C WITH 3#10, 1#10 GND SHIELDED VFD CABLES PLUS 2 #14 SHIELD CONTROL CABLE FOR VFD SHUT DOWN SIGNAL. ROUTE TO BAY 1-6 DRIVE CABINET.
2. 1"C WITH 3#10, 1#10 GND SHIELDED VFD CABLES PLUS 2 #14 SHIELD CONTROL CABLE FOR VFD SHUT DOWN SIGNAL. ROUTE TO BAY 7-12 DRIVE CABINET.
3. 1-1/2"C WITH 3#2, 1#8 GND SHIELDED VFD CABLES PLUS 2 #14 SHIELD CONTROL CABLE FOR VFD SHUT DOWN SIGNAL. ROUTE TO BIOFILTER DRIVE CABINET.
4. 3/4"C, 3#12, 1#12 GND TO PANEL E.
5. TO WELL PUMP CONTROLLER. SEE ONE-LINE DIAGRAM E-1 FOR FEEDER.
6. 1-1/4"C, 3#3, 1#8 GND SHIELDED VFD CABLES PLUS 2 #14 SHIELD CONTROL CABLE FOR VFD SHUT DOWN SIGNAL. ROUTE TO VFD IN CURING BUILDING.
7. PROVIDE 30A / 3P / NF / NEMA 3R DISCONNECT SWITCH AT EACH COMPOST FAN. DISCONNECT SWITCH SHALL INCLUDE EARLY BREAK CONTACTS FOR VFD SHUTDOWN.
8. PROVIDE 100A / 3P / NF / NEMA 3R DISCONNECT SWITCH AT EACH COMPOST FAN. DISCONNECT SWITCH SHALL INCLUDE EARLY BREAK CONTACTS FOR VFD SHUTDOWN.
9. PRESSURE AND TEMP TRANSMITTER.
10. 1"C WITH PRESSURE AND TEMP TRANSMITTER WIRING.

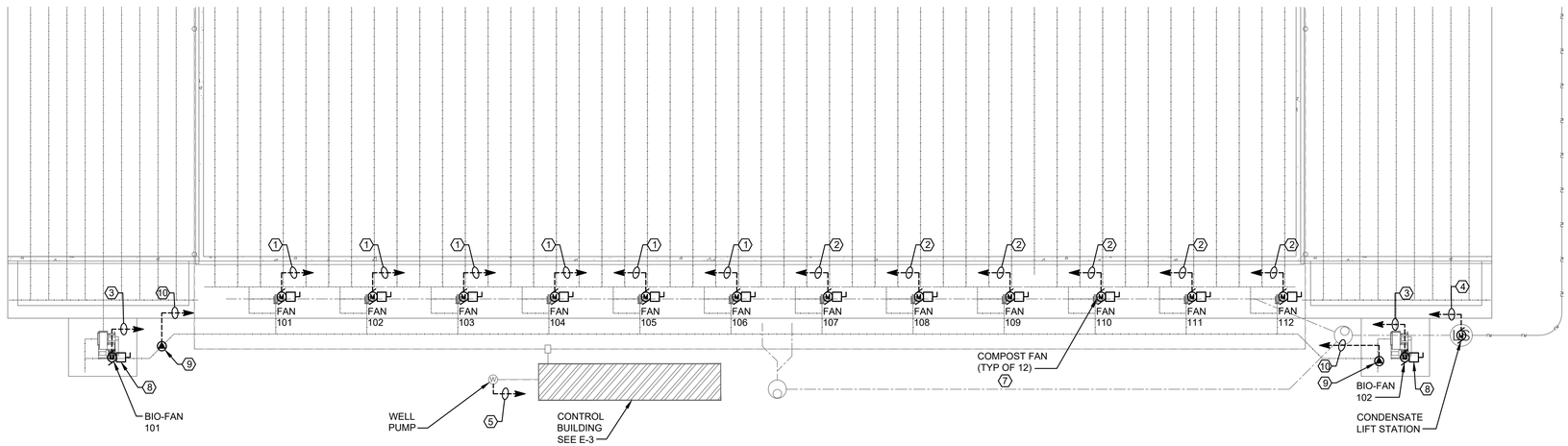

2 / E-4 COMPOST AND BIOFILTER ELECTRICAL PLAN

1/16" = 1'-0"

0 8' 16' 32'

SCALE: 1/16" = 1'-0"

N

MONTANA ALAN BRONEC 11707 PE LICENSED PROFESSIONAL ENGINEER

Revision	Date	By
30% Draft	8/1/24	AB
60% Draft	11/18/24	AB
90% Draft	1/31/25	AB
Final	2/14/25	AB

Revision: Final

Plot Scale: 1:1

Drawn By: S.Galli

Approved By: A.Bronec, P.E.

Checked By: A.Bronec, P.E.

Designed By: A.Bronec, P.E.

Engineer

Anderson~Montgomery CONSULTING ENGINEERS
1064 N. Warren
Helena, MT 59601
Phone (406) 449-3303

Cushing Terrell
306 Railroad St.
Missoula, MT 59802
Phone (406) 544-8565

Owner: City Of Missoula

Project Title: Garden City Compost Facility Improvements

Sheet Title: **CURING, COMPOST AND BIOFILTER ELECTRICAL PLAN**

Sheet: **E-4**

L:\MSLA_COMPOST\BIMCAD\Elec\MSST_E-4.dwg SAVED: 2/7/25 PRINTED: 2/12/25 BY: SCOTTGA

APPENDIX B

DEQ STORMWATER & DEWATERING PERMIT FORMS

GENERAL PERMIT
FOR
STORM WATER DISCHARGES ASSOCIATED WITH CONSTRUCTION ACTIVITY

PERMIT NUMBER MTR100000

MONTANA DEPARTMENT OF ENVIRONMENTAL QUALITY

AUTHORIZATION TO DISCHARGE UNDER
THE MONTANA POLLUTANT DISCHARGE ELIMINATION SYSTEM (MPDES)

In compliance with Section 75-5-101 *et seq.*, Montana Code Annotated (MCA); Administrative Rules of Montana (ARM) 17.30.1101; 17.30.1301 *et seq.; and ARM* 17.30.601 *et seq.*, owners and operators (permittees) with authorization under this *General Permit for Storm Water Discharges Associated with Construction Activity* are permitted to discharge storm water resulting from construction activities as described in Section 1.1 of this Permit and subject to effluent limitations, monitoring requirements, and other conditions set forth herein.

This Permit shall become effective XXXXXXXXX.

This Permit and the authorization to discharge shall expire at midnight, XXXXXXXXX.

FOR THE MONTANA DEPARTMENT
OF ENVIRONMENTAL QUALITY

_____

Jon Kenning, Chief
Water Protection Bureau

Issuance Date: _____

DRAFT

Contents

1. Coverage Under This Permit 4
1.1. Eligibility 4
1.1.1. Construction Activities Covered 4
1.1.2. Allowable Storm Water Discharges 5
1.1.3. Allowable Non-Storm Water Discharges 5
1.1.4. Limitations on Coverage 5
1.2. Authorization under this Permit 6
1.2.1. New Authorizations (Not Previously Authorized) 6
1.2.2. Continuing Authorizations Under the 2013 General Permit 7
1.2.3. Public Sign or Other Notice Requirement (Effective January 1, 2021) 7
1.2.4. Modification to NOI-SWCs 7
1.3. Transfer of Coverage under this Permit 8
1.4. Termination of Coverage under This Permit 8
1.5. Storm Water Rainfall Erosivity Waiver Form 8
2. Effluent Limitations, Monitoring, and Reporting Requirements 9
2.1. Technology-Based Effluent Limitations 9
2.1.1. Erosion and Sediment Controls 9
2.1.2. Soil Stabilization 10
2.1.3. Dewatering 10
2.1.4. Pollution Prevention Measures 10
2.1.5. Surface Outlets 10
2.1.6. Prohibited Discharges 10
2.2. Water Quality-Based Effluent Limitations 10
2.2.1. Water Quality Standards 10
2.2.2. Storm Water Discharges to Impaired Waterbodies 11
2.3. Inspections 11
2.3.1. Person(s) Responsible for Conducting and Documenting Inspections 11
2.3.2. Frequency of Inspections 11
2.3.3. Weekly Routine Inspections 12
2.3.4. Biweekly Routine and Post-Storm Event Inspections 12
2.3.5. Reductions in Inspection Frequency 12
2.3.6. Severe Winter Conditions Delay 12
2.3.7. Inspection Requirements 13
2.3.8. BMP Maintenance, Replacement, and Failures 13
2.4. Corrective Actions 14
2.5. Recordkeeping 14
2.6. Reporting 15
2.6.1. Notification of Primary SWPPP Administrator Changes 15
2.6.2. Noncompliance Reporting 15
3. Storm Water Pollution Prevention Plan (SWPPP) 16
3.1. SWPPP – General Requirements 16
3.2. SWPPP Preparer and Administrator 16
3.2.1. SWPPP Preparer (Effective January 1, 2019) 16
3.2.2. SWPPP Administrator 17
3.2.3. SWPPP Preparer and Administrator – Minimum Requirements 17
3.3. Site Description 18
3.4. Identification of Potential Pollutant Sources 18
3.5. Selection of Best Management Practices (BMPs) 19
3.6. Dewatering 19

DRAFT

3.7. Major Construction Activity and BMP Phasing 19
3.8. Final Stabilization 20
3.9. Post-Construction Storm Water Management 20
3.10. Site Map 20
3.11. Inspection and BMP Maintenance Procedures 21
3.12. SWPPP Revisions and Updates 21
3.12.1. Conditions that trigger revisions and updates are outlined below: 21
3.12.2. Revision and Update Options 22
4. Standard Conditions 23
4.1. Duty to Comply 23
4.2. Penalties for Violations of Permit Conditions 23
4.3. Duty to Reapply 23
4.4. Need to Halt or Reduce Activity not a Defense 23
4.5 Duty to Mitigate 23
4.6. Proper Operation and Maintenance 23
4.7. Permit Actions 23
4.8. Property Rights 24
4.9. Duty to Provide Information 24
4.10. Inspection and Entry 24
4.11. Availability of Reports 24
4.12. Reporting Requirements- Monitoring and Monitoring Reports 24
4.13. Monitoring and Records- Representative Sampling 24
4.14. Monitoring and Records- Retention of Records 24
4.15. Monitoring and Records- Records Content 24
4.16. Monitoring and Records- Test Procedures 25
4.17. Monitoring and Records-Penalties for Falsification of Reports and Tampering 25
4.18. Signatory Requirements 25
4.19. Reporting Requirements - Planned Changes 26
4.20. Reporting Requirements- Anticipated Noncompliance 26
4.21. Reporting Requirements- Transfers 26
4.22. Reporting Requirements- Compliance Schedules 26
4.23. Reporting Requirements- Twenty-four Hour Reporting 26
4.24. Reporting Requirements- Other Noncompliance 27
4.25. Reporting Requirements- Other Information 27
4.26. Bypass 27
4.27. Upset Conditions 27
4.28. Fees 27
4.29. Removed Substances 28
4.30. Oil and Hazardous Substance Liability 28
4.31. Severability 28
4.32. Reopener Provisions 28
4.33. Toxic Pollutants 28
5. General Definitions and Abbreviations 29

DRAFT

1. Coverage Under This Permit

1.1. Eligibility

1.1.1. Construction Activities Covered

This Permit applies to all areas of the State of Montana, except for lands within the external boundaries of Indian Reservations. This permit applies to "storm water discharge associated with construction activity," as defined in Part 5 of this permit.

A "storm water discharge associated with construction activity" regulated under this permit occurs when both of the following two criteria are met:

- There are areas of ground disturbance or other potential pollutant sources due to the construction activity where a storm water discharge to state surface waters can occur; and
- The construction activity disturbs through clearing, excavating, grading, or placement/removal of earth material a total area equal to or greater than one acre. The "total area" must include all areas which are part of a "larger common plan of development or sale", as defined in Part 5 of this permit.

Determination of the acreage of disturbance does not typically include disturbance for routine maintenance activities on existing roads where the line and grade or hydrologic capacity of the road is not being altered, nor does it include the paving of existing roads.

In determining the occurrence or potential occurrence of a "storm water discharge associated with construction activity" based on the acreage of ground disturbance and discharge potential to state surface waters, the permittee must consider the following additional factors:

- All potential drainage/discharge conditions and flow patterns, and their variation during the different phases of the construction activity;
- All potential rainfall or snowmelt events and their unpredictability over time (such as experiencing a relatively higher rainfall or snowmelt amount in a relatively shorter time period);
- Support activities for the construction project which may be on or off the conventional construction project "site" (as defined in Part 5 of this permit);
- Storm water discharges must typically be regulated beyond the conventional construction earthwork and building phases, lasting from the initiation of construction-related ground disturbance to "final stabilization" (as defined in Part 5 of this permit) of that disturbance, which can sometimes take significant extra time to achieve; and
- Storm water which discharges into a drain inlet and/or storm sewer system from the site is regulated as a discharge to state surface waters if the inlet or system ultimately discharges into a state surface water.

Support activities can include, but are not limited to, areas used for access-related work, earth material borrow areas, equipment staging areas, materials storage areas, temporary concrete or asphalt batch plants, and any areas used for fill placement. For storm water discharges from support activities to be covered under this permit for a particular construction activity permit authorization, such support activities must:

- Not be part of a larger commercial operation serving multiple unrelated construction activities, and not continue operation beyond the completion of the permittees construction activity; and
- Have appropriate controls and measures identified for the particular support activity, including required documentation, in the Storm Water Pollution Prevention Plan (SWPPP) required in Part 3 of this permit.

DRAFT

1.1.2. Allowable Storm Water Discharges

Unless otherwise made ineligible through the provisions in Part 1.1.4. below, the following discharges are eligible for coverage under this permit:

- Storm water discharges associated with construction activity as defined in Part 5 of this permit; and
- Storm water discharges to impaired waterbodies that are consistent with approved TMDLs and assigned WLAs, and the additional requirements within this permit.

1.1.3. Allowable Non-Storm Water Discharges

The following are non-storm water discharges allowed under this permit:

- Uncontaminated condensate from air conditioners, coolers, and other compressors and from the outside storage of refrigerated gases or liquids;
- Irrigation drainage;
- Landscape watering provided all pesticides, herbicides, and fertilizer have been applied in accordance with the approved labeling;
- Pavement wash waters where no detergents are used and no spills or leaks of toxic or hazardous materials have occurred (unless all spilled material has been removed);
- Routine external building wash down that does not use detergents;
- Uncontaminated ground water or spring water;
- Water used to control dust;
- Discharges from emergency fire-fighting activities;
- Foundation or footing drains where flows are not contaminated with process materials; and
- Incidental windblown mist from cooling towers that collects on rooftops or adjacent portions of the facility, but not intentional discharges from the cooling tower (e.g., “piped” cooling tower blowdown or drains).

1.1.4. Limitations on Coverage

The following discharges are not eligible for coverage under this permit:

- Storm water discharges that are mixed with non-storm water, other than those non-storm water discharges listed in Part 1.1.3.;
- Prohibited discharges as listed in Part 2.1.6.;
- Storm water discharges to impaired waterbodies that are inconsistent with approved TMDLs and assigned WLAs, and the additional requirements with this permit;
- Storm water discharges to waterbodies that are inconsistent with additional Department requirements, on a case-by-case basis; or
- Discharges which the Department determines have a reasonable potential to cause, or contribute to, an exceedance of any applicable water quality standard, and/or the Department has determined coverage under a MPDES Individual Permit is required.

Coverage does not relieve the permittee from any other statute, regulation, permits, or other regulatory requirements for activities occurring within the project area.

The Department may deny coverage for storm water discharges citing that the permittee appears unable to comply with the one or more of the following requirements:

- Effluent standards, effluent limitations, standards of performance for new sources of pollutants, toxic effluent standards and prohibitions, and pretreatment standards;
- Water quality standards established pursuant to 75-5-301, MCA;
- Prohibition of discharge of any radiological, chemical, or biological warfare agent or high-level radioactive waste;
- Prohibition of any discharges to which the regional administrator has objected in writing;

DRAFT

- Prohibition of any discharge which is in conflict with a plan or amendment thereto approved pursuant to section 208(b) of the Act;
- Any additional requirements that the Department determines are necessary to carry out the provisions of 75-5-101, et seq., MCA; and
- A point source is a new source or a new discharge and the discharge from its construction or operation will cause or contribute to a violation of water quality standards (ARM 17.30.1311(7)).

In addition, the Department may deny coverage for the following reasons:

- The storm water discharge is different in degree or nature from discharges reasonably expected from sources or activities within the category described in this MPDES General Permit (including pollutants from process wastewater streams).
- The MPDES permit authorization for the same operation has previously been denied or revoked.
- The discharge sought to be authorized under the 2017 General Permit is also included within an application or is subject to review under the Major Facility Siting Act, 75-20-101, et seq., MCA.
- The point source is, or will be, located in an area of unique ecological or recreational significance. Such determination must be based upon considerations of Montana stream classifications adopted under 75-5-301, MCA, impacts on fishery resources, local conditions at proposed discharge sites, and designations of wilderness areas under 16 USC 1132 or of wild and scenic rivers under 16 USC 1274.

1.2. Authorization under this Permit

An “owner or operator” of a “storm water discharge associated with construction activity” is required to obtain authorization under an MPDES permit. “Owner or operator” means a person who owns, leases, operates, controls, or supervises a point source. All construction activities that disturb and are part of a larger common plan of development or sale are subject to permit coverage.

In this permit, the “owner or operator” is also identified as the “permittee”.

A Notice of Intent (NOI) process is used for an owner or operator to obtain authorization to discharge under this permit. Through the submittal of a NOI, the owner or operator acknowledges eligibility for coverage under this permit and agrees to comply with the effluent limits and conditions of this permit. Authorization is effective upon the date of receipt of the complete NOI Package by the Department. A copy of the completed NOI Package must be maintained for the permittee’s records. The NOI Package, as outlined below, shall be completed and submitted to:

Montana Department of Environmental Quality
Water Protection Bureau
P.O. Box 200901
Helena, MT 59620-0901

1.2.1. New Authorizations (Not Previously Authorized)

Owners or operators can obtain first-time coverage under this permit by submitting a complete Notice of Intent (NOI-SWC) Package to the Department.

The NOI-SWC Package must consist of:

- A completed NOI-SWC form using the standard NOI form provided by the Department;
- A separate SWPPP, including all associated maps, diagrams, details, and plans, which has been completed in accordance with the requirements identified in Part 3 of this permit;
- A copy of the consultation letter from the Montana Sage Grouse Habitat Conservation Program (if applicable); and
- The appropriate “application fee” for the NOI-SWC.

DRAFT

1.2.2. Continuing Authorizations Under the 2013 General Permit

Permittees requiring continued authorization beyond the December 31, 2017, expiration date, must submit a complete NOI-SWC package to the Department for coverage under the reissued 2018-2022 General Permit.

The NOI-SWC Package must consist of:

- A completed renewal NOI-SWC form using the standard NOI-SWC form provided by the Department;
- A separate SWPPP, including all associated maps, diagrams, details, and plans, which has been completed in accordance with the requirements identified in Part 3 of this permit;
- A copy of the consultation letter from the Montana Sage Grouse Habitat Conservation Program (if applicable); and
- The appropriate "application fee" for the NOI-SWC.

1.2.3. Public Sign or Other Notice Requirement (Effective January 1, 2021)

This requirement is effective January 1, 2021, in order to provide additional time for the regulated community to comply. The permittee must post a sign or other form of notice to publically display confirmation of coverage under this General Permit. The sign or other notice must be positioned in a safe, accessible location in close proximity to the regulated construction activities and visible from the nearest road. At a minimum the sign or other notice must include:

- Large, readable font;
- The MPDES authorization number or a copy of the confirmation letter; and
- The statement "Contact Montana DEQ Water Protection Bureau about this project."

1.2.4. Modification to NOI-SWCs

Modification requests to current authorizations (including decreased or increased disturbance area) submitted within six months of the date of the coverage under this Permit are processed with the corresponding fee. If the request is submitted six months after the date of coverage under this Permit, the modification will be processed with the corresponding new "application fee" for the NOI-SWC.

A permittee may not request to add additional construction-related disturbance area(s) unless the new additional construction-related disturbance is directly contiguous to and directly associated with the original site, except for support activities.

The NOI-SWC Package must consist of:

- A completed NOI-SWC form using the standard NOI-SWC form provided by the Department with Modification checked in Section A;
- A separate SWPPP, including all associated maps, diagrams, details, plans, and records, updated in accordance with the requirements identified in Part 3 of this permit;
- A copy of the consultation letter from the Montana Sage Grouse Habitat Conservation Program (see below for applicability); and
- The appropriate "application fee".

Sage Grouse Consultation Requirements for Modifications to NOIs- If the project is within designated sage grouse habitat, any modification due to a change in disturbed acreage requires verification from the Montana Sage Grouse Habitat Conservation Program that may require a consultation letter and/or updates to a consultation letter. If the modification request is outside of sage grouse habitat, no consultation is required. See NOI-SWC form and attached instructions.

DRAFT

1.2.5. Resubmittal and Administrative Processing

The Department may request a resubmittal of a NOI-SWC, SWPPP, any required records, and any associated fees. Administrative processing fees may be assessed for Department reviews.

1.3. Transfer of Coverage under this Permit

The Department has a Permit Transfer Notification form (PTN-SWC). Permittees must use the PTN-SWC to transfer ownership or change the name of the entity that holds an authorization under this permit with the corresponding fee. The PTN-SWC must be submitted at least 30 days before the effective date of the proposed transfer and constitutes written notice to the Department under the Montana Water Quality Act that the new "owner or operator" assumes responsibility and liability for all the terms and conditions, including permit fees. This PTN-SWC form may not be used to transfer coverage to a new or different construction site, activity or location. Until the Department determines the submitted PTN-SWC form and the transfer to the new "owner or operator" is complete, the "owner or operator" of record remains responsible for compliance with the terms of the authorization under this Permit, including fees and/or violations.

1.4. Termination of Coverage under This Permit

Permittees may terminate coverage under this Permit after achieving of "final stabilization" for a construction site as defined in Part 5. of this Permit. In addition to achieving final stabilization, the permittee must also:

- Remove temporary storm water conveyances/channels and other temporary storm water control measures and/or BMPs
- Remove construction equipment and vehicles, and
- Cease all potential pollutant-generating activities due to the construction activity.

The permittee must submit the standard Department Notice of Termination (NOT-SWC) form to terminate coverage under this Permit. The NOT-SWC form must be signed by an authorized signatory and submitted to the Department.

Coverage under the permit remains in effect until the Department processes a NOT-SWC form. The permittee is responsible for payment of annual fees for each calendar year covered under the permit. Failure to submit a NOT-SWC will result in accrual of annual permit fees. The permittee is responsible for complying with the terms of this permit until notified by the Department that the authorization is terminated.

If an individual MPDES permit is issued to an owner or operator for discharges which would otherwise be subject to this permit, coverage under this Permit is terminated on the effective date of the individual MPDES permit.

1.5. Storm Water Rainfall Erosivity Waiver Form

Owners or operators of construction activities with less than five total acres of ground disturbance may use a "Storm Water Rainfall Erosivity Waiver Form" instead of obtaining coverage under this General Permit.

Submittal of a waiver certification is an optional alternative to obtaining permit coverage for discharges of storm water associated with small construction activity. If you submit a waiver request and the associated fee, your project is not waived until approval by the Department and the Department issues an approval letter.

Any discharge of storm water associated with small construction activity not covered by either this General Permit or a waiver may be considered an unpermitted discharge under the Montana Water Quality Act. The Department reserves the right to take enforcement for any unpermitted discharges that occur between the time construction commenced and either General Permit authorization is granted or a complete and accurate waiver certification is submitted and approved. The Department may notify any operator covered by a waiver that they must obtain General Permit coverage. Any member of the public may petition the Department to take action under this provision by submitting written notice along with supporting justification.

DRAFT

2. Effluent Limitations, Monitoring, and Reporting Requirements

2.1. Technology-Based Effluent Limitations

Technology based effluent limits must be achieved through the good engineering selection and design, implementation, installation, and maintenance of Best Management Practices (BMPs) for all authorized storm water discharges associated with construction activities. To meet this requirement, the permittee must comply with all conditions in Part 2.1. of this Permit, and any other state or local requirements, regardless of stringency. All BMPs must be documented in the SWPPP, site map(s), and/or inspection records. If alternative controls are utilized, documentation must be included to confirm impracticability and that the chosen measure achieves comparable criteria.

At a minimum, the permittee must achieve the following in all BMPs:

2.1.1. Erosion and Sediment Controls

a. Control Storm Water Volume and Velocity to minimize soil erosion, to include:
   i. Select and design BMPs that address the amount, frequency, intensity, and total duration of precipitation; quantity and quality of storm water runoff including peak flow rates and total storm water volume; soil characteristics for the construction project area(s) including the range of the soil particle sizes expected to be present on the site; and timeframes the construction project will be completed;
   ii. Implement and install all BMPs in accordance with good engineering practices and design specifications;
   iii. Complete implementation and installation of BMPs before or at the start of each major construction activity;
   iv. Minimize erosion within the construction project area;
   v. Divert storm water runoff from disturbed areas to sediment removal BMPs;
   vi. Minimize sediment discharges from the construction project area; and
   vii. Maintain BMPs in effective operating condition.
b. Control Storm Water Discharges, to include:
   i. Minimize erosion at outlets and conveyance channels; and therefore, protecting downstream properties and waterways by controlling volume and velocity within the construction project area;
   ii. Protect storm drain inlets;
   iii. Manage and minimize vehicle / equipment entrances and exits to the construction project area;
   iv. Stabilize ditches, swales, channels, and outlets;
   v. Construct storm water retention and detention facilities during initial site grading activities;
   vi. Provide surface outlets for retention and detention facilities for active construction, and discharge the highest quality water from the facility; and
   vii. Protect infiltration facilities from sedimentation during active construction.
c. Minimize Soil Disturbance, to include:
   i. Limit areas of disturbance and soil exposure; and
   ii. Provide a natural buffer within the construction project area.
d. Minimize the Disturbance of Steep Slopes of 15% or greater, to include:
   i. Design and construct cut-and-fill slopes to minimize erosion;
   ii. Divert off site storm water or ground water away from slopes and disturbed areas; and
   iii. Prevent storm water run on from impacting sediment removal BMPs.
e. Maintain Natural Buffers around State Surface Waters, to include:
   i. Maintain natural buffers around state waters; and
   ii. Direct storm water runoff to vegetated areas.
f. Minimize Soil Compaction and Preservation of Topsoil, to include:
   i. Mark and maintain clearing limits before disturbing soils and during construction activities; and
   ii. Preserve topsoil.

DRAFT

2.1.2. Soil Stabilization

a. Temporary Soil Stabilization, to include:
   i. Stabilize disturbed areas immediately for any portion of the construction project that will remain inactive for 14 or more calendar days with erosion control BMPs.
b. Final Stabilization, to include:
   ii. Stabilize disturbed areas within any portion of the project that have completed clearing, grading, excavation, or other earth disturbing activities with erosion control BMPs.

2.1.3. Dewatering

a. Control dewatering activities to prevent discharges to state waters; and
b. Obtain authorization under the Construction Dewatering General Permit or an individual permit prior to discharge of dewatering effluent to state surface waters.

2.1.4. Pollution Prevention Measures

a. Implement pollution prevention measures that effectively manage and dispose of all pollutants in a way that does not cause contamination of storm water, to include:
   i. Provide cover, containment, and protection for all chemicals, liquids, petroleum products, and construction materials, products, and wastes;
   ii. Use spill prevention and control measures for vehicle maintenance and fueling;
   iii. Maintain appropriate spill kits; clean up spills and leaks immediately; and report appropriate quantities in accordance with Part 4. of the permit;
   iv. Prevent discharge of equipment wash water and clean-out wastes, and designate these activities away from and state waters and their conveyances;
   v. Apply fertilizers and herbicides per manufacturers' requirements; and
   vi. Prevent discharges of concrete products.

2.1.5. Surface Outlets

When discharging from basins and impoundments, outlet structures must be utilized that withdraw water from the surface, unless infeasible, to discharge the highest quality water from the facility.

2.1.6. Prohibited Discharges

The following discharges are prohibited:

i. Wastewater from washout of concrete;
ii. Wastewater from washout and cleanout of stucco, paint, form release oils, curing compounds and other construction materials;
iii. Fuels, oils, or other potential pollutants used in vehicle and equipment operation and maintenance;
iv. Soaps or solvents used in vehicle and equipment washing or external building wash down;
v. Storm water discharges of disturbed, contaminated soils; and
vi. Toxic or hazardous substances from a spill or other release including the disturbance and/or removal of contaminated soils.

2.2. Water Quality-Based Effluent Limitations

2.2.1. Water Quality Standards

Storm water discharges regulated under this permit must be controlled as necessary to meet applicable numeric and narrative water quality standards. A storm water discharge associated with construction activity may not cause or contribute to an exceedance of applicable water quality standards.

DRAFT

If at any time the permittee becomes aware, or the Department determines, that a storm water discharge causes or contributes to an exceedance of applicable water quality standards, the permittee must take corrective action as required in Part 2.4 of this permit. Additionally, the Department may require the permittee to obtain coverage under an individual permit, if information indicates the discharges are not controlled as necessary to meet applicable water quality standards.

2.2.2. Storm Water Discharges to Impaired Waterbodies

The permittee must identify if storm water discharges from their construction activity will discharge to impaired waterbodies. Information on impaired waterbodies may be obtained from the Department or from the Montana DEQ Clean Water Act Information Center website. The permittee must consider all impairments and the presence of the corresponding pollutants of concern in their proposed discharges. Storm water-related pollutants contributing to impairments generally include sediment, suspended solids and turbidity, and any secondary sources of pollutants based on construction materials and support activities. Discharges of the pollutants of concern to impaired waterbodies are eligible for coverage under this General Permit if consistent with approved TMDLs and assigned WLAs, and the requirements outlined below.

a. Discharges to an Impaired Waterbodies with No Approved TMDL

   For regulated storm water discharges associated with construction activity under this permit, the SWPPP must include a section that describes BMPs that target and reduce any discharges of the identified pollutants of concern to the corresponding impaired waterbodies. Under this subsection of the General Permit, the permittee need only to include the identified pollutants of concern in its SWPPP if the waterbodies are listed as impaired for such pollutants.

b. Discharges to an Impaired Waterbodies with an Approved TMDL

   For regulated storm water discharges associated with construction activity, the SWPPP must include a section that describes BMPs that target and reduce any discharges of the identified pollutants of concern to the corresponding impaired waterbodies. Under this subsection of the General Permit, the permittee need only include the identified pollutants of concern in its SWPPP if the waterbodies are listed as impaired for such pollutants. The section submitted by the permittee must ensure that all discharges are consistent with the assumptions of any applicable TMDL wasteload allocation. All EPA approved TMDL wasteload allocations applicable to MPDES-regulated storm water construction activities are incorporated by reference into this permit.

Permittees will be informed if any additional controls are necessary for discharges to protect beneficial uses or to be consistent that the assumptions of any available TMDL wasteload allocation. Such additional controls must be identified within the permittees SWPPP. In certain cases the Department may find coverage under an MPDES individual permit necessary.

2.3. Inspections

2.3.1. Person(s) Responsible for Conducting and Documenting Inspections

Inspections must be performed by a SWPPP Administrator as defined in Part 3.2. of this permit.

2.3.2. Frequency of Inspections

Inspections must be performed in accordance with one of the two schedules listed in Parts 2.3.3. or 2.3.4. unless the construction site or areas of the construction site meet the conditions of the inspection schedule defined in Part 2.3.5. Inspections must be conducted during the construction project's normal business hours. The inspection schedule must be documented in the SWPPP. Any changes to the inspection schedule must be documented in the SWPPP or corresponding inspection report.

DRAFT

2.3.3. Weekly Routine Inspections

A SWPPP Administrator must, at a minimum, conduct a routine inspection at least once every 7 calendar days. Any changes to the inspection schedule, even during periods of noncompliance, must be documented in the SWPPP or corresponding inspection report.

2.3.4. Biweekly Routine and Post-Storm Event Inspections

A SWPPP Administrator must, at a minimum, conduct a routine inspection at least once every 14 calendar days, and a post-storm event inspection within 24-hours of the end of a rainfall event of 0.25 inches or greater, and/or within 24-hours of runoff from snowmelt. If an inspection is conducted for a post-storm event, this inspection can be used as a biweekly routine inspection, but the biweekly routine inspections must commence again no later than 14 calendar days after the last post-storm event inspection. Any changes to the inspection schedule, even during periods of noncompliance, must be documented in the SWPPP or corresponding inspection report.

2.3.5. Reductions in Inspection Frequency

The inspection schedules in Parts 2.3.3. and 2.3.4. may be temporarily reduced to a routine inspection once every 30 calendar days if one of the following conditions is met:

a. All construction activities at the site are temporarily inactive or shutdown and all areas of disturbance have achieved “temporary stabilization” as defined in Part 5 of this permit;
b. Earthwork and construction activities are completed at the site, and erosion and sediment controls are implemented or installed to establish final stabilization;
c. Reduction applicable to any portion of the project is temporarily inactive or shutdown and these portions have achieved “temporary stabilization” as defined in Part 5 of this permit; and
d. Reduction applicable to any portion of the project that is completed and erosion and sediment controls are implemented or installed to establish final stabilization.

Any reduction in the inspection schedule must be documented in the SWPPP or corresponding inspection report. Specific requirements for conditions “c “and “d” above: these portions of the construction project must be identified on the site map(s). Specific requirements for conditions “a” thru “d” above: all BMPs must be in place as identified in the SWPPP and/or inspection report, and site map(s).

2.3.6. Severe Winter Conditions Delay

If an inspection is not possible due to (1) remote site access and (2) severe winter conditions, a delayed inspection may occur. Documentation of the cause of the delayed inspection must be included in the corresponding inspection report and SWPPP, accordingly. A substitute inspection will be performed to compensate for the delayed inspection and follow requirements in accordance with Part 2.3.7. Inspections must resume as soon as the site is accessible. Delays are self-determined on a case-by-case basis with appropriate documentation, and determination is subject to review during a Department compliance evaluation inspection.

DRAFT

2.3.7. Inspection Requirements

Inspections conducted under Parts 2.3.3., 2.3.4., and 2.3.5. of this permit must comply with the inspection requirements in Part 2.3.7.

The following areas must be inspected at a minimum:

a. All areas disturbed by the construction activity;
b. All pollutant sources generated by the construction activity;
c. Material and waste storage areas exposed to rainfall or snowmelt;
d. Support activities exposed to rainfall or snowmelt;
e. Entrance and exit locations to the construction activity;
f. Site perimeter;
g. All areas where storm water flows onto and within the construction project area; and
h. Discharge locations and if impaired waterbodies were impacted.

At a minimum, the inspection report must include:

- The MPDES Permit Authorization Number;
- The inspection date and time;
- Name(s) of the SWPPP Administrator(s) completing the inspection;
- Weather conditions at the time of the inspection;
- The type of inspection based on Parts 2.3.3., 2.3.4., 2.3.5., and 2.3.6.;
- Changes in the inspection schedule;
- Major construction activities at the time of the inspection;
- Pollutant sources present at the time of the inspection;
- BMPs implemented or installed at the time of the inspection;
- BMPs Maintenance and Corrective Actions including:
    - BMPs requiring maintenance;
    - Corrective actions per Part 2.4.
- Description of corrective actions taken for the items identified above, including the dates for the corrective action(s) were completed;
- Discharges of sediment or other pollutants;
- Instances of noncompliance; and
- Certification and signature.

Inspection reports must be signed and certified by a SWPPP Administrator based on the requirements in Part 4.15. of this permit. Inspection records must be maintained as required by Part 2.5. of this permit. Maintenance, repair, replacement, or installation of new BMPs determined necessary during site inspections to address ineffective or inadequate BMPs must be conducted in accordance with Part 2.3.8. of this permit.

2.3.8. BMP Maintenance, Replacement, and Failures

All BMPs must be maintained in effective operating condition. If inspections identify BMPs that are not in effective operating condition, maintenance must be documented and performed before the next storm event.

If new BMPs are required to be implemented or installed or if additional BMPs are necessary, these additional measures must be implemented or installed before the next storm event.

All changes in the design, implementation, or installation of erosion and sediment controls or other BMPs must be documented in the inspection report and site map(s). In addition, these changes can be updated to the SWPPP for the permittee to maintain consistency with their internal records.

DRAFT

2.4. Corrective Actions

Corrective actions are actions a SWPPP Administrator takes to:

- Repair, modify, or replace any BMP used at the site;
- Install new or additional BMPs;
- Clean up, dispose of, and report spills, releases, and other deposits; and
- Remedy a permit violation or noncompliance.

If any of the following conditions occur, a SWPPP Administrator must review and revise the selection, design, installation, implementation, and maintenance of BMPs to ensure the condition is eliminated and will not be repeated in the future:

- An unauthorized release or discharge (e.g., spill, leak, or discharge of non-storm water not authorized by this or another MPDES permit) occurs at the site;
- A SWPPP Administrator or the Department determines that the BMPs are not adequate enough for the discharge as it causes or contributes to an exceedance of applicable water quality standards;
- A SWPPP Administrator or the Department determines that modifications to the BMPs are necessary to meet the requirements in Part 2. of this permit;
- A SWPPP Administrator or the Department determines that the BMPs are not properly selected, designed, installed, operated, and/or maintained; or
- A failure of erosion or sediment controls resulting in sediment, solids, or other wastes being discharged from the site. Upon identification of sediment, solids, or other wastes lost or discharged from the site, the material must be cleaned up and placed back on site, or otherwise disposed of in an acceptable manner.

A SWPPP Administrator must document the completed corrective actions in the corresponding inspection report, and complete any updates to the site map(s). In addition, these changes can be updated in the SWPPP for the permittee to maintain consistency with their internal records.

2.5. Recordkeeping

At the identified site, the primary SWPPP Administrator must retain:

- a copy of this permit;
- a copy of the completed and signed NOI form including modification submittals;
- a copy of the Department's confirmation letter;
- a copy of the signed SWPPP, including revisions and updates, and attachments;
- BMP installation, design, and maintenance specifications/standards for all BMPs installed and detailed in the SWPPP and/or inspection records;
- Site map(s) reflecting up-to-date site conditions
- SWPPP Administrator and Preparer documentation under Part 3.2. of this permit;
- all inspection records required under Part 2.3., 2.4., 3.11., and 3.12. of this permit;
- all reports of noncompliance under Part 4 of this permit; and
- the Sage Grouse consultation letter, as applicable.

These documents are to be made available at the site immediately upon request from a Department representative, EPA official, or local official. These records are to be maintained by the permittee for a period of three years.

DRAFT

2.6. Reporting

2.6.1. Notification of Primary SWPPP Administrator Changes

The permittee must notify the Department in writing of any change of the SWPPP Administrator person/position, mailing address, and/or telephone number within 15 calendar days of change. Notification can be submitted through Attachment A or written authorization.

2.6.2. Noncompliance Reporting

Any instance of noncompliance must be reported to the Department as required by Part 4.23. of the permit.

DRAFT

3. Storm Water Pollution Prevention Plan (SWPPP)

3.1. SWPPP – General Requirements

3.1.1. The SWPPP is a document that must be developed and implemented in accordance with good engineering selection and design, hydrologic principles, and pollution control practices to minimize and control potential pollutants in storm water associated with construction activity.

3.1.2. The SWPPP must meet the following minimum objectives:

- Provide a site description of the nature of the construction activity that includes identification and details of the major construction activities and project area characteristics;
- Identify and describe all potential pollutant sources which may affect the quality of storm water discharges associated with the construction activity;
- Identify and describe the BMPs to be used to reduce potential pollutants in storm water discharges associated with the construction activity and to ensure compliance with the effluent limitations in this permit;
- Identify and describe the measures which will be used to achieve final stabilization; and
- Identify and clearly describe the inspection and maintenance procedures implemented at the site to maintain all erosion and sediment control and other BMPs identified in the SWPPP, in good and effective operating condition.

3.1.3. At a minimum, the SWPPP must include the information specified in Part 3. and as specified in other parts of this permit.

3.1.4. The SWPPP must be implemented as stated in the Primary SWPPP Administrator's up-to-date field copy. SWPPP implementation must initiate at the start of ground disturbance associated with the construction activity, and continue until final stabilization of all construction activity-related ground disturbance is achieved and permit coverage has been terminated. The SWPPP must be maintained to reflect up-to-date site conditions through documented revisions and updates. Inspection reports, logs, and the site map may supplement the SWPPP to reflect the most up-to-date site conditions. Refer to Part 3.12.2. for Revision and Update Options.

3.1.5. If a SWPPP was prepared under a previous version of this General Permit, it must be reviewed and updated in accordance with Part 1.2.2.

3.2. SWPPP Preparer and Administrator

Any SWPPP Preparer and Administrator are required to maintain a valid certification meeting the minimum requirements below.

3.2.1. SWPPP Preparer (Effective January 1, 2019)

The permittee must specify a SWPPP Preparer in the NOI form and the SWPPP. A SWPPP Preparer is an individual or position title who is responsible for planning and development of the SWPPP prior to submission of the NOI-SWC. The SWPPP Preparer must develop and document all aspects of the SWPPP, initiating with the start of construction activities, and lasting until final stabilization is achieved and the permit authorization is terminated. The Department has identified the minimum requirements for this role (below), so that the quality of storm water discharges is controlled and the effluent limitations in Part 2. of this permit are achieved.

The SWPPP Preparer minimum requirements and valid certification must be completed before the submittal of the NOI-SWC Package to the Department. Validation of certification will be determined at the time a NOI-SWC package is submitted and/or during a regulatory inspection. Valid certification demonstrating the minimum requirements for the SWPPP Preparer must be maintained with the SWPPP, and must include the following:

DRAFT

- Name(s), title(s), phone number, and emails of SWPPP Preparers; and
- Date and name of provider of course(s).

SWPPP Preparer minimum requirements as stated in Part 3.2.3. are effective January 1, 2019, in order to provide additional time for the regulated community to comply with the minimum requirements. The Department encourages SWPPP Preparers to obtain valid certification as soon as possible during this first year period of the permit in order to better ensure compliance with the other conditions in this permit. This one year extension of SWPPP Preparer minimum requirements does not apply to the compliance expectations for all other requirements in the permit, which remain fully enforceable for the entire effective permit cycle.

3.2.2. SWPPP Administrator

The permittee must specify a SWPPP Administrator and any other designated SWPPP Administrators in the NOI-SWC form and the SWPPP. Additional SWPPP Administrators can be identified in Attachment A. A SWPPP Administrator(s) is an individual or position title who is responsible for developing, implementing, maintaining, revising, and updating the SWPPP. The SWPPP Administrator(s) must address all aspects of the SWPPP, initiating with the start of construction activities, and lasting until final stabilization is achieved and the permit authorization is terminated.

The SWPPP Administrator(s) must have knowledge of the principles and practices of erosion and sediment controls and pollution prevention practices and possess the skills necessary to assess site conditions and determine the effectiveness of selected BMPs. The Department has identified the requirements for this role (below), so that the quality of storm water discharges is controlled and the effluent limitations in Part 2. of this permit are complied with.

The SWPPP Administrator(s) must meet the duly authorized representative requirements as defined in Part 4.18. of this permit to sign inspection reports and other reports.

The SWPPP Administrator(s) person(s)/position(s) provided on the NOI form is used by the Department as a permittee contact.

This SWPPP Administrator(s) minimum requirements and valid certification must be completed before the start of earth-disturbing activities or potential pollutant-generating activities, whichever occurs first. For new employees hired after this time, the minimum requirements and valid certification must be completed before assuming SWPPP Administrator responsibilities. Validation of certification will be determined during an inspection. Valid certification demonstrating the minimum requirements for the SWPPP Administrator(s) must be maintained with the SWPPP, and must include the following:

- Name(s), title(s), phone number, and emails of SWPPP Administrator(s); and
- Date and name of provider of course(s).

3.2.3. SWPPP Preparer and Administrator – Minimum Requirements

The SWPPP Preparer and Administrator(s) must be knowledgeable and skilled within the following concepts to serve their role and maintain a valid certification demonstrating these concepts:

- MPDES permitting requirements to include, but not limited to, applicability, application procedures, SWPPP elements, standard conditions, and termination conditions;
- Local permitting requirements;
- Sage Grouse requirements based on location of the project;
- Knowledge of the principles and practices of erosion and sediment controls and pollution prevention practices, including the minimum criteria for BMPs defined in Part 2.1. of this permit;

DRAFT

- Construction site assessment and planning skills to include knowledge and identification of major construction activities and the phases of construction activities and all support activities, and the potential pollutants generated based on the scope of the project;
- Development, selection, and implementation skills for all storm water controls and BMPs on the site, including final stabilization measures, required by this permit based on appropriate design, installation, function, and location; and how they are to be maintained and/or repaired according to developed and/or manufacturers plans and specifications;
- Development, selection, and implementation skills for pollution prevention controls and BMPs required by this permit;
- Development and implementation skills for procedures and associated documentation for all inspections, maintenance, and required recordkeeping to include when and how to conduct inspections, record applicable findings, take corrective actions, and, when appropriate, report violations and/or noncompliance; and
- Ability to develop and update the site map(s) required by this permit.

3.3. Site Description

The SWPPP must contain a narrative description of the following:

3.3.1. The nature of the construction activity and what is being constructed;

3.3.2. A description of all support activities and associated storm water discharges dedicated to the construction activity including but not limited to: material borrow areas, material fill areas, concrete or asphalt batch plants, equipment staging areas, access roads/corridors, material storage areas, and material crushing/recycling/processing areas;

3.3.3. The total area of the site (in acres), and the area of the site (in acres) expected to undergo construction-related disturbance (including all construction-related support activities);

3.3.4. A description of the character and erodibility of soil(s) and other earth material to be disturbed at the site, including cut/fill material to be used;

3.3.5. For a storm water discharge associated with construction activity with construction-related disturbance of five acres or more of total land area:

- an estimate of the runoff coefficient of the site, both before and after construction, including a description of what this is based on; and
- an estimate of the increase in impervious area after the construction activity is completed;

3.3.6. The names of receiving state surface waters and a description of the size (drainage area), type, and location of each point source discharge or outfall with connectivity. Identify if the receiving state surface water is listed as impaired. If there is no distinguishable point source discharge or outfall to the receiving state surface waters, a description of storm water runoff flow and drainage patterns into the receiving state surface waters must be provided. This must specify if discharges are to unnamed drainages and provide the name of the first named drainage that will receive that discharge downgradient of the site. If the discharge is to a municipal separate storm sewer, the location of the MS4 outlet where the storm sewer discharges into receiving state surface waters; and

3.3.7. Provide a brief description of the existing natural cover and vegetation at the site and an estimate of the percent density of vegetative ground cover.

3.4. Identification of Potential Pollutant Sources

All potential pollutant sources, including soils, materials, and activities, within the scope of the entire construction project must be evaluated for the potential to contribute pollutants to storm water discharges. The SWPPP must identify those sources determined to have the potential to contribute pollutants to storm water discharges, and these sources must be controlled through BMP selection and implementation, as required in Part 3.5. below.

DRAFT

The permittee must identify all potential pollutant sources within lists provided for soils, materials, and activities within the SWPPP. In addition, the permittee must identify and list the following:

- Other potential pollutant sources from soils, activities, and materials not already identified the SWPPP;
- Other non-storm water discharges if present; and
- Any additional potential pollutant sources.

3.5. Selection of Best Management Practices (BMPs)

The SWPPP must document the selection of BMPs based on the potential pollutant sources identified in Part 3.4. above that have been installed and implemented at the site to achieve the effluent limits in Parts 2.1. and 2.2. of this permit. BMP design, installation, implementation, and maintenance specifications for the BMPs identified in the SWPPP must be maintained on-site. These sources must be kept up to date and accessible upon request. Any departures from the specifications must reflect good engineering practices and must be documented in the SWPPP or corresponding inspection reports.

The permittee must identify all selected BMPs within the SWPPP including:

- Erosion Control BMPs;
- Sediment Control BMPs;
- Run On/Runoff Control BMPs;
- Administrative Controls; and
- Post Construction Controls.

In addition, the permittee must select and list the following:

- Other additional BMPs not already identified in the SWPPP and likely to be used at the construction project;
- Local Sediment and Erosion Controls including a description of requirements;
- BMPs that target and reduce discharges of the identified pollutants of impairment to impaired waterbodies as required under Part 2.2. of this permit; and
- Sage Grouse controls (The consultation letter attached to the SWPPP will meet the requirements for this section in Part 2.5.).

3.6. Dewatering

Discharges of ground water due to dewatering practices which will not discharge to state surface waters must be managed by appropriate BMPs, and these must be identified in the SWPPP. The ground water dewatering practices and BMPs must be identified on the site map required under Part 3.10. of this permit. Discharges of ground water due to dewatering practices which will discharge to state surface waters are not authorized under this permit and must obtain authorization under the MPDES "General Permit for Construction Dewatering", Permit Number MTG070000, as applicable, or an individual permit. These dewatering practices and BMPs must be identified in the SWPPP, and identified on the site map required under Part 3.10. of this permit.

3.7. Major Construction Activity and BMP Phasing

The SWPPP must identify the major construction activities, provide a list of all the construction related tasks to complete each major construction activity, and identify an estimated timeframe of initiation and completion of each major construction activity. A distinct major construction activity is defined as any distinct construction related disturbance or distinct pollutant generating activity that occurs within the schedule of activities associated with the construction project. The construction related tasks of each major construction activity are the series of steps necessary to the complete the major construction activity.

DRAFT

The SWPPP must clearly document the selected BMPs throughout the succession of major construction activities until the site reaches final stabilization. The SWPPP may include a table for the permittee to document their project's major construction activities and BMP Phasing. Inspection reports will supplement the SWPPP to reflect the most up-to-date site conditions.

3.8. Final Stabilization

The SWPPP must clearly describe all procedures and BMPs used to ensure that "final stabilization," as defined in Part 5. of this permit and ARM 17.30.1102(5), is achieved.

For all areas with construction-related ground disturbance, final stabilization must be achieved uniformly over the entire disturbed area, without relatively bare areas based on the pre-disturbance conditions. If using seed or planted vegetation to achieve final stabilization, the plants must be perennial. Before submitting the NOT form to terminate coverage under this permit and in addition to achieving final stabilization, the following must have also occurred:

- removal of temporary storm water conveyances/channels and other temporary storm water control measures and/or BMPs
- removal of construction equipment and vehicles, and
- cessation of any potential pollutant-generating activities due to the construction activity.

3.9. Post-Construction Storm Water Management

The SWPPP must clearly describe any BMPs which are to be used to control storm water and potential pollutants in storm water discharges that will occur after construction operations have been completed at the site, including any applicable local requirements. If a temporary BMP transitions into a post-construction BMP, the SWPPP must clearly describe this transition and any associated maintenance. In addition, for post-construction storm water management at constructed/developed sites, the Department supports the use of "Low Impact Development" (LID) and "Green Infrastructure" BMPs, where such practices are practicable, that infiltrate, evapotranspire, or capture for reuse the storm water runoff generated from the majority of expected storm events.

3.10. Site Map

The SWPPP must include one or a series of legible site maps/plans of sufficient scale and size which clearly display site conditions. Multiple site maps/plans are encouraged for clarity as necessary.

At a minimum, the SWPPP site maps/plans must include the following:

3.10.1. Site boundaries to include the perimeter of common plans of development;

3.10.2. Locations and types of all dedicated construction activity support areas (including off-site) such as access-related work, earth material borrow areas, equipment staging areas, materials storage areas, temporary concrete or asphalt batch plants, and any areas used for fill placement;

3.10.3. Locations where ground-disturbing activities will occur, noting any BMP phasing of major construction activities;

3.10.4. Preconstruction topography of the site including showing state surface waters which will receive storm water runoff from the site. Identify if the receiving state surface water is listed as impaired;

3.10.5. Drainage pattern(s) and flow directions (use arrows) of storm water and authorized non-storm water flow onto, over, and from the site property before and after major grading activities, including lines showing boundaries between different drainage areas;

3.10.6. Storm water, and allowable non-storm water discharge locations and types, including the locations of any storm drain inlets and where storm water or allowable non-storm water will be discharged to state surface waters;

3.10.7. Municipal separate storm sewer systems to include the identification of applicable outlets, where the construction activity's storm water discharges are into them;

DRAFT

3.10.8. Locations and sources of run-on to the site from adjacent property that may contain potential pollutants (including sediment);

3.10.9. Locations of areas of cut and fill;

3.10.10. Locations of areas which are to remain undisturbed including vegetative buffer areas;

3.10.11. Locations of existing natural cover and vegetation or other pre-existing ground stabilization measures before construction (such as forest, pasture, lawn, pavement, structures);

3.10.12. Approximate slopes before and after major grading activities. Note areas of steep slopes both before and after grading;

3.10.13. Locations where sediment, soil, or other construction and building materials will be stockpiled;

3.10.14. Locations of fueling, vehicle and equipment maintenance, and/or vehicle cleaning and washing areas;

3.10.15. Locations of concrete washout and other waste management areas;

3.10.16. Locations of ground water or other construction dewatering activities and discharges (see Part 3.7.9. of this permit);

3.10.17. Designated points on the site where vehicles will exit onto paved roads;

3.10.18. Locations of other potential pollutant-generating activities not specified elsewhere;

3.10.19. Locations of all structural and non-structural BMPs for potential pollutants other than sediment;

3.10.20. Locations and specific types of all temporary or permanent erosion and sediment control BMPs;

3.10.21. Locations and specific types of all storm water control BMPs, including impoundments or conveyances such as retention and detention ponds, ditches, pipes, and swales;

3.10.22. Locations of structures and other impervious surfaces upon completion of construction;

3.10.23. Public Sign (Effective January 1, 2021);

3.10.24. Map scale;

3.10.25. North arrow; and

3.10.26. Map legend.

3.11. Inspection and BMP Maintenance Procedures

The permittee must identify the selected inspection schedule (Part 2.3.2.) within the SWPPP. The SWPPP must identify and clearly describe the inspection and maintenance procedures implemented at the site to maintain all erosion and sediment controls and other BMPs identified in the SWPPP, in good and effective operating condition. These documented procedures must comply with the inspection requirements in Part 2.3. of this permit and correspond with BMP maintenance specifications (also refer to Parts 2.3.8., 2.4., 3.5., and 3.9. of the permit for related BMP maintenance requirements).

3.12. SWPPP Revisions and Updates

The permittee must maintain the SWPPP and site map. Also, see Parts 2.3. and 2.4. of this permit.

3.12.1. Conditions that trigger revisions and updates are outlined below:

a. When there is a change in design, construction, operation, or maintenance of the site, which would require the implementation of new, additional, or revised BMPs; or
b. If the SWPPP proves to be ineffective in achieving the general objectives of controlling potential pollutants in storm water discharges associated with construction activity; or
c. The Department determines that the BMPs are not properly selected, designed, installed, operated, and/or maintained; or
d. When BMPs are no longer necessary and are removed.

DRAFT

3.12.2. Revision and Update Options

The permittee must select one of three options below to document how revisions and updates to the SWPPP will be maintained to reflect the most up-to date site conditions. Inspection reports may be used to supplement the SWPPP to reflect revisions and updates. Subsequently, the site map must reflect any revisions or updates to the SWPPP or from corresponding inspection reports. Revisions and updates must be made before changes in the site conditions except for BMP changes addressing installation/implementation and these specific revisions and updates will be made as soon as practicable, but in no case more than 72 hours after the changes occur at the site.

a. Revisions and updates directly to the SWPPP and corresponding sections (i.e. additional SWPPP pages attached to include the time, date, and SWPPP Administrator authorizing the change), and the site map; or
b. Revisions and updates reflected through inspection records, and the site map; or
c. Revisions and updates reflected through a log, and the site map. Log entries must include the time and date of the change(s) in the field; an identification of the BMP(s) removed or added; the location(s) of those BMP(s); and the name of the SWPPP Administrator authorizing the change.

DRAFT

4. Standard Conditions

4.1. Duty to Comply

The permittee must comply with all conditions of this permit. Any permit noncompliance constitutes a violation of the Montana Water Quality Act and is grounds for enforcement action; for termination under the General Permit; for revocation and reissuance of a confirmation letter; for a modification requirement; or for denial of coverage under the General Permit (new or renewed). The permittee shall give the Department advance notice of any planned changes at the permitted facility or of an activity which may result in permit noncompliance.

4.2. Penalties for Violations of Permit Conditions

The Montana Water Quality Act at MCA 75-5-631 provides that in an action initiated by the Department to collect civil penalties against a person who is found to have violated a permit condition of this Act is subject to a civil penalty not to exceed $25,000. Each day of violation constitutes a separate violation.

The Montana Water Quality Act at MCA 75-5-632 provides that any person who willingly or negligently violates a prohibition or permit condition of the Act is guilty of an offense, and upon conviction, is subject to a fine not to exceed $25,000 per day of violation or imprisonment for not more than one year, or both, for the first conviction. Following an initial conviction, any subsequent convictions subject a person to a fine of up to $50,000 per day of violation or by imprisonment for not more than two years, or both.

The Montana Water Quality Act at MCA 75-5-611 provides for administrative penalties not to exceed $10,000 for each day of violation and up to a maximum not to exceed $100,000 for any related series of violations. Except as provided in permit conditions “Bypass of Treatment Facilities” and “Upset Conditions”, nothing in this permit shall be construed to relieve the permittee of the civil or criminal penalties for noncompliance.

4.3. Duty to Reapply

If the permittee wishes to continue an activity regulated by this permit after the expiration date of this permit, the permittee must apply for and obtain a new permit. The reapplication must be submitted at least 30 days before the expiration date of this permit.

4.4. Need to Halt or Reduce Activity not a Defense

It shall not be a defense for a permittee in an enforcement action that it would have been necessary to halt or reduce the permitted activity in order to maintain compliance with the conditions of this permit.

4.5 Duty to Mitigate

The permittee shall take all reasonable steps to minimize or prevent any discharge in violation of this permit which has a reasonable likelihood of adversely affecting human health or the environment.

4.6. Proper Operation and Maintenance

The permittee shall at all times properly operate and maintain all facilities and systems of treatment and control (and related appurtenances) which are installed or used by the permittee to achieve compliance with the conditions of this permit. Proper operation and maintenance also includes adequate laboratory controls and appropriate quality assurance procedures. This provision requires the operation of back-up or auxiliary facilities or similar systems which are installed by a permittee only when the operation is necessary to achieve compliance with the conditions of the permit.

4.7. Permit Actions

This permit may be modified, revoked and reissued, or terminated for cause. The filing of a request by the permittee for a permit modification, revocation and reissuance, or termination, or a notification of planned changes or anticipated noncompliance, does not stay any permit condition.

DRAFT

4.8. Property Rights

The issuance of this permit does not convey any property rights of any sort, or any exclusive privilege.

4.9. Duty to Provide Information

The permittee shall furnish to the Department, within a reasonable time, any information which the Department may request to determine whether cause exists for modifying, revoking and reissuing, or terminating this permit, or to determine compliance with this permit. The permittee shall also furnish to the Department, upon request, copies of records required to be kept by this permit.

4.10. Inspection and Entry

The permittee shall allow the head of the Department, or an authorized representative upon the presentation of credentials and other documents as may be required by law, to:

- Enter upon the permittee's premises where a regulated facility or activity is located or conducted, or where records must be kept under the conditions of this permit;
- Have access to and copy, at reasonable times, any records that must be kept under the conditions of this permit;
- Inspect at reasonable times any facilities, equipment (including monitoring and control equipment), practices, or operations regulated or required under this permit; and as otherwise authorized by the Montana Water Quality Act, any substances or parameters at any location; and
- Sample, or monitor at reasonable times for the purpose of assuring permit compliance, any substances or parameters at any location.

4.11. Availability of Reports

Except for data determined to be confidential under 40 CFR Part 2, all reports prepared in accordance with the terms of this permit shall be available for public inspection at the offices of the Department. As required by the Clean Water Act, applications, permits and effluent data shall not be considered confidential.

4.12. Reporting Requirements- Monitoring and Monitoring Reports

The Department may require a permittee to monitor in addition to any conditions in this permit, on a case-by-case basis. If monitoring is required, the Department will specify monitoring requirements to include, and not limited to, storm water sampling, analytical testing, and an evaluation of monitoring results, recording, and reporting. Monitoring results must be reported on a discharge monitoring report (DMR) or as required by the Department. Monitoring results must be reported at the intervals specified.

If the permittee monitors any pollutant more frequently than required, using approved test procedures, the results of this monitoring must be included in the calculation and reporting of data submitted in the DMR. Calculations for all limitations which require averaging of measurements must utilize an arithmetic mean unless otherwise specified by the Department.

4.13. Monitoring and Records- Representative Sampling

Samples and measurements taken for the purpose of monitoring must be representative of the monitored activity.

4.14. Monitoring and Records- Retention of Records

The permittee shall retain records of all monitoring information including all calibrations and maintenance records and all original strip chart recordings for continuous monitoring instrumentation, copies of all reports required by this permit, and records of all data used to complete the application for this permit, for a period of at least three years from the date of the sample, measurement, report, or application. This period may be extended by request of the Department at any time.

4.15. Monitoring and Records- Records Content

Records of monitoring information must include:

DRAFT

- The date, exact place, and time of sampling or measurements;
- The individual(s) who performed the sampling or measurements;
- The date(s) analyses were performed;
- The individual(s) who performed the analyses;
- The analytical techniques or methods used; and
- The results of such analyses.

4.16. Monitoring and Records- Test Procedures

Monitoring must be conducted according to test procedures approved under Title 40 of the Code of Federal regulations (40 CFR) Part 136, unless other test procedures have been specified in this permit, confirmation letter, or by the Department.

4.17. Monitoring and Records-Penalties for Falsification of Reports and Tampering

The Montana Water Quality Act at MCA 75-5-633 provides that any person who knowingly falsifies, tampers with, or renders inaccurate any monitoring device or method, or makes any false statement, representation, or certification in any record or other document submitted or required to be maintained under this permit, including monitoring reports or reports of compliance or noncompliance shall, upon conviction be punished by a fine of not more than $25,000 per violation, or by imprisonment for not more than six months per violation, or by both.

4.18. Signatory Requirements

Authorized representatives: All applications, reports or information submitted to the Department or the EPA shall be signed and certified in accordance with ARM 17.30.1323.

All permit notices of intent shall be signed as follows:

- For a corporation: by a principal executive officer or ranking elected official;
- For a partnership or sole proprietorship: by a general partner or the proprietor, respectively;
- For a municipality, State, Federal, or other public agency: by either a principal executive officer or ranking elected official.

All reports required by the permit and other information requested by the Department shall be signed by a person described above or by a duly authorized representative of that person. A person is considered a duly authorized representative only if:

- The authorization is made in writing by a person described above and submitted to the Department; and
- The authorization specified either an individual or a position having responsibility for the overall operation of the regulated facility or activity, such as the position of plant manager, operator of a well or a well field, superintendent, position of equivalent responsibility, or an individual or position having overall responsibility for environmental matters for the company. A duly authorized representative may thus be either a named individual or an individual occupying a named position.

Changes to authorization: If an authorization described above is no longer accurate because a different individual or position has responsibility for the overall operation of the facility, a new authorization satisfying the above requirements must be submitted to the Department prior to or together with any reports, information, or applications to be signed by an authorized representative.

Certification: Any person signing a document under this section shall make the following certification:

"I certify under penalty of law that this document and all attachments were prepared under my direction or supervision in accordance with a system designed to assure that qualified personnel properly gather and evaluate the information submitted. Based on my inquiry of the person or persons who manage the system, or those persons directly responsible for gathering the information, the information submitted is, to the best of

DRAFT

my knowledge and belief, true, accurate, and complete. I am aware that there are significant penalties for submitting false information, including the possibility of fine and imprisonment for knowing violations."

4.19. Reporting Requirements - Planned Changes

The permittee shall give notice to the Department as soon as possible of any planned physical alterations or additions to the permitted facility, activity, or operation.

Notice is required only when:

- The alteration or addition to the permitted facility, activity, or operation may meet one of the criteria for determining whether a facility is a new source; or
- The alteration or addition could significantly change the nature or increase the quantity of pollutant discharged. This notification applies to pollutants which are not subject to effluent limitations in the permit.

4.20. Reporting Requirements- Anticipated Noncompliance

The permittee shall give advance notice to the Department of any planned changes in the permitted facility/activity/operation which may result in noncompliance with permit requirements. The permittee shall notify as soon as possible by phone and provide with the following information, in writing, within five (5) days of becoming aware of such condition:

- A description of the discharge and cause of noncompliance; and
- The period of noncompliance including exact dates and times, or if not corrected, the anticipated time the noncompliance is expected to continue, and steps being taken to reduce, eliminate and prevent recurrence of the non-complying discharge.

4.21. Reporting Requirements- Transfers

Permit coverage is not transferable to any person except after notice is given to the Department and a transfer fee is paid. The Permit Transfer Notification (PTN-SWC) form provided by the Department must be completed and must be received by the Department at least 30 days prior to the anticipated date of transfer. The form must be signed by both the existing owner/operator and the new owner/operator following the signatory requirements of Part 4.18 of the General Permit.

4.22. Reporting Requirements- Compliance Schedules

Reports of compliance or noncompliance with, or any progress reports on, interim, and final requirements contained in any compliance schedule of this permit or required by the Department shall be submitted no later than 14 days following each schedule date.

4.23. Reporting Requirements- Twenty-four Hour Reporting

The permittee shall report any serious incident of noncompliance affecting the environment. Any information must be provided orally within 24 hours from the time the permittee first becomes aware of the following circumstances:

- Any noncompliance which may seriously endanger health or the environment;
- Any unanticipated bypass which exceeds any effluent limitation in the permit;
- Any upset which exceeds any effluent limitation in the permit; or
- As applicable, violation of a maximum daily discharge limit of any pollutant listed by the Department in the General Permit or confirmation letter.

A written submission shall also be provided within five days of the time that the permittee becomes aware of the circumstances. The written submission shall contain:

- A description of the noncompliance and its cause;
- The period of noncompliance, including exact dates and times;
- The estimated time noncompliance is expected to continue if it has not been corrected; and
- Steps taken or planned to reduce, eliminate, and prevent reoccurrence of the noncompliance.

DRAFT

Oral Notification: The report shall be made orally to the Water Protection Bureau at (406) 444-3080 or the Office of Disaster and Emergency Services at (406) 324-4777.

Waiver of written notification requirement: The Department may waive the written report on a case-by-case basis if the oral report has been received within 24 hours by the Water Protection Bureau, by phone, (406) 444-3080. Written reports shall be submitted to the following address:

Montana Department of Environmental Quality
Water Protection Bureau
PO Box 200901
Helena, Montana 59620-0901

4.24. Reporting Requirements- Other Noncompliance

Instances of noncompliance not required to be reported within 24 hours shall be reported as soon as possible. The reports shall contain the information listed above for written submissions under Part 4.23.

4.25. Reporting Requirements- Other Information

Where the permittee becomes aware that it failed to submit any relevant facts in a permit application package, or submitted incorrect information in a permit application package or any report to the Department, it shall promptly submit such facts or information.

4.26. Bypass

Intentional diversions of untreated waste streams from any portion of a treatment facility are prohibited unless

- the bypass does not cause effluent to exceed effluent limitations and is necessary for essential maintenance to ensure efficient operation; or
- the bypass is unavoidable to prevent loss of life, personal injury, or severe property damage; or
- there are no feasible alternatives;
- and the proper notification is submitted.

Bypass is prohibited and the Department may take enforcement action against a permittee for a bypass. If the permittee knows in advance of the need for anticipated bypass, it shall submit prior notice, if possible, at least ten days before the date of the bypass. The Department may approve an anticipated bypass, after considering its adverse effects. The permittee shall submit notice of an unanticipated bypass as required under Part 4.23.

4.27. Upset Conditions

An upset may be used as an affirmative defense in actions brought to the permittee for noncompliance with a technology-based effluent limitation. The permittee (who has the burden of proof) must have operational logs or other evidence showing:

- when the upset occurred and its causes;
- that the facility was being operated properly;
- proper notification was made; and
- remedial measures were taken as required by the duty to mitigate standard condition.

4.28. Fees

The permittee is required to submit payment of an annual fee as set forth in ARM 17.30.201. If the permittee fails to pay the annual fee within 90 days after the due date for the payment, the Department may:

- Impose an additional assessment computed at the rate established under ARM 17.30.201: and,
- Suspend the processing of the application for a permit or authorization or, if the nonpayment involves an annual permit fee, suspend the permit, certificate or authorization for which the fee is required. The Department may lift suspension at any time up to one year after the suspension occurs if the holder has paid all outstanding fees, including all penalties, assessments and interest imposed under this sub-section. Suspensions are limited to one year, after which the permit will be terminated.

DRAFT

4.29. Removed Substances

Collected screenings, grit, solids, sludges, or other pollutants removed in the course of treatment shall be disposed of in such a manner so as to prevent any pollutant from entering any waters of the state or creating a health hazard.

4.30. Oil and Hazardous Substance Liability

Nothing in this permit shall be construed to preclude the institution of any legal action or relieve the permittee from any responsibilities, liabilities, or penalties to which the permittee is or may be subject under Section 311 of the Clean Water Act.

4.31. Severability

The provisions of this permit are severable, and if any provision of this permit, or the application of any provision of this permit to any circumstance, is held invalid, the application of such provision to other circumstances, and the remainder of this permit, shall not be affected thereby.

4.32. Reopener Provisions

This permit may be reopened and modified (following proper administrative procedures) to include the appropriate effluent limitations (and compliance schedule, if necessary), or other appropriate requirements if one or more of the following events occurs:

- Water Quality Standards: The water quality standards of the receiving water(s) to which the permittee discharges are modified in such a manner as to require different permit conditions than contained in this permit.

- Water Quality Standards are Exceeded: If it is found that water quality standards or trigger values in the receiving stream are exceeded either for parameters included in the permit or others, the Department may modify the permit conditions or water management plan.

- TMDL or Wasteload Allocation: TMDL requirements or a wasteload allocation is developed and approved by the Department and/or EPA for incorporation in this permit.

- Water Quality Management Plan: A revision to the current water quality management plan is approved and adopted which calls for different effluent limitations than contained in this permit.

4.33. Toxic Pollutants

The permittee shall comply with effluent standards or prohibitions established for toxic pollutants which are present in the discharge, within any specified timeframe within rule or thereof, and even if the General Permit or confirmation letter has not yet been modified to incorporate such standard or prohibition for the toxic pollutant.

DRAFT

5. General Definitions and Abbreviations

The following definitions and abbreviations apply to terms used in this permit.

"Act" means the Montana Water Quality Act, Title 75, chapter 5, MCA.

"Best Management Practices" ("BMPs") means schedule of activities, prohibition of practices, maintenance procedures, and other management practices to prevent or reduce the pollution of state surface waters. BMPs also include treatment requirements, operating procedures, and practices to control plant site runoff, spillage or leaks, sludge or waste disposal, or drainage from raw material storage.

"Board" means the Montana Board of Environmental Review established by 2-15-3502, MCA.

"CFR" means the Code of Federal Regulations.

"Clean Water Act" means the federal legislation at 33 USC 1251, et seq.

"Department" means the Montana Department of Environmental Quality. Established by 2-15- 3501, MCA.

"Disturbance" related to construction activity means areas that are subject to clearing, excavating, grading, stockpiling earth materials, and placement/removal of earth material performed during construction projects.

"Ephemeral stream" means a stream or part of a stream that flows only in direct response to precipitation in the immediate watershed or in response to the melting of a cover of snow and ice and whose channel bottom is always above the local water table.

"EPA" or "US EPA" means the United States Environmental Protection Agency.

"Facility or activity" means any MPDES point source or any other facility or activity (including land or appurtenances thereto) that is subject to regulation under the MPDES program.

"Final stabilization" means the time at which all soil-disturbing activities at the site have been completed, and a vegetative cover has been established with a density of at least 70% of the pre-disturbance levels, or equivalent permanent, physical erosion reduction methods have been employed. Final stabilization using vegetation must be accomplished using seeding mixtures or forbs, grasses, and shrubs that are adapted to the conditions of the site. Establishment of a vegetative cover capable of providing erosion control equivalent to pre-existing conditions at the site will be considered final stabilization.

"General Permit" means an MPDES permit issued under ARM 17.30.1341 authorizing a category of discharges under the Act within a geographical area.

"Larger common plan of development or sale" means a contiguous area where multiple separate and distinct construction activities are planned to occur at different times on different schedules under one plan. These separate and distinct construction activities which form a larger common plan of development or sale may have areas of disturbance which are not physically connected.

"Montana pollutant discharge elimination system (MPDES)" means the system developed by the Board and Department for issuing permits for the discharge of pollutants from point sources into state surface waters. The MPDES is specifically designed to be compatible with the federal NPDES program established and administered by the EPA.

"Owner or operator" is defined at 75-5-103, MCA.

DRAFT

"Point source" means a discernible, confined, and discrete conveyance, including but not limited to any pipe, ditch, channel, tunnel, conduit, well, discrete fissure, container, rolling stock, concentrated animal feeding operation, landfill leachate collection system, vessel, or other floating craft, from which pollutants are or may be discharged. This term does not include return flows from irrigated agriculture or agricultural storm water runoff.

"Pollutant" means dredged spoil, solid waste, incinerator residue, sewage, garbage, sewage sludge, munitions, chemical wastes, biological materials, radioactive materials, heat, wrecked or discarded equipment, rock, sand, cellar dirt, and industrial, municipal, and agricultural wastes discharged into water. The terms "sewage," "industrial waste," and "other wastes" as defined in 75-5-103, MCA, are interpreted as having the same meaning as pollutant.

"Process Wastewater" means any water which, during manufacturing or processing, comes into · direct contact with or results from the production or use of any raw material, intermediate product, finished product, byproduct, or waste product.

"Receiving state surface waters" is the river, stream, lake, etc., which receives the discharge from the site.

"Regional Administrator" is the administrator of the EPA Region with jurisdiction over federal water pollution control activities in the State of Montana.

"Runoff coefficient" means the fraction of total rainfall that will appear at the conveyance as runoff.

"Severe property damage" means substantial physical damage to property, damage to treatment facilities which causes them to become inoperable, or substantial and permanent loss of natural resources which can reasonably be expected to occur in the absence of a bypass.
Severe property damage does not mean economic loss caused by delays in production.

"Site" means the land or water area where any facility or activity is physically located or conducted, including adjacent land used in connection with the facility or activity.

"State waters" is defined at 75-5-103, MCA.

"Storm water" means storm water runoff from precipitation, snowmelt runoff, and surface runoff and drainage.

"Storm water discharge associated with construction activity" means a discharge of storm water from construction activities including clearing, grading, and excavation that result in the disturbance of equal to or greater than one acre of total land area. For purposes of these rules, construction ·activities include clearing, grading, excavation, stockpiling earth materials, and other placement or removal of earth material performed during construction projects. Construction activity includes the disturbance of less than one acre of total land area that is a part of a larger common plan of development or sale if the larger common plan will ultimately disturb one acre or more.

- Regardless of the acreage of disturbance resulting from a construction activity, this definition includes any other discharges from construction activity designated by the department pursuant to ARM 17.30.1105(1)(f).
- For construction activities that result in disturbance of less than five acres of total land area, the acreage of disturbance does not include routine maintenance that is performed to maintain the original line and grade, hydraulic capacity, or original purpose of the facility.
- For construction activities that result in disturbance of five acres or more of total land area, this definition includes those requirements and clarifications stated in ARM 17.30.1102(29)(a), (b), (d) and (e).

DRAFT

"Storm Water Pollution Prevention Plan (SWPPP)" means a document developed to help identify sources of pollution potentially affecting the quality of storm water discharges associated with a facility or activity, and to ensure implementation of measures to minimize and control pollutants in storm water discharges associated with a facility or activity. The Department determines specific requirements and information to be included in a SWPPP based on the type and characteristics of a facility or activity, and on the respective MPDES permit requirements.

"Surface waters" means any waters on the earth's surface, including but not limited to streams, lakes, ponds, and reservoirs; and irrigation and drainage systems. Water bodies used solely for treating, transporting, or impounding pollutants shall not be considered surface water.

"Temporary Stabilization" means a condition where exposed soils or disturbed areas are provided a temporary vegetative and/or non-vegetative protective cover to prevent erosion and sediment loss. Temporary stabilization may include temporary seeding, geotextiles, mulches, and other techniques to reduce or eliminate erosion until either final stabilization can be achieved or until further construction activities take place to re-disturb this area.

"Total maximum daily load" or "TMDL" is defined at 75-5-103, MCA.

"Upset" means an exceptional incident in which there is unintentional and temporary noncompliance with technology-based permit effluent limitations because of factors beyond the reasonable control of the permittee. An upset does not include noncompliance to the extent caused by operational error, improperly designed treatment facilities, inadequate treatment facilities, lack of preventive maintenance, or careless or improper operation.

"Waste load allocation" means the portion of a receiving water's loading capacity that is allocated to one of its existing or future point sources.

"Waste pile" means any non-containerized accumulation of solid, non-flowing waste that is used for treatment or storage.

DRAFT

MONTANA DEPARTMENT OF ENVIRONMENTAL QUALITY

GENERAL PERMIT
for
CONSTRUCTION DEWATERING

Permit No.: MTG070000

AUTHORIZATION TO DISCHARGE UNDER THE
MONTANA POLLUTANT DISCHARGE ELIMINATION SYSTEM

In compliance with Montana Water Quality Act, Title 75, Chapter 5, Montana Code Annotated (MCA), and the federal Water Pollution Control Act (the "Clean Water Act"), 33 U.S.C. 1251 *et seq*., applicants issued an authorization letter for coverage under this Construction Dewatering General Permit are permitted to discharge in accordance with permit compliance requirements and other conditions set forth herein.

A copy of this General Permit and the letter of authorization from the Department of Environmental Quality (DEQ) must be available at all times. The General Permit is not valid without a current letter of authorization for the dewatering activity.

This permit shall become effective **{to be determined}.**

This permit and the authorization to discharge shall expire at midnight, **{5 years after the effective date}.**

FOR THE MONTANA DEPARTMENT
OF ENVIRONMENTAL QUALITY

DRAFT
Jon Kenning, Chief
Water Protection Bureau
Water Quality Division

Issuance Date: **TBD**

DRAFT

TABLE OF CONTENTS

I. ELIGIBILITY AND APPLICATION PROCESSES 3

A. SOURCES ELIGIBLE FOR COVERAGE 3
B. SOURCES EXCLUDED FROM COVERAGE 3
C. CONTINUING AUTHORIZATIONS UNDER THE 2020-ISSUED CDGP 4
D. NEW AUTHORIZATION UNDER THE 2020-ISSUED CDGP 4
E. MODIFICATIONS TO AUTHORIZATIONS UNDER THE 2020-ISSUED CDGP 4
F. TERMINATE PERMIT COVERAGE 5
G. TRANSFER PERMIT COVERAGE 5

II. PERMIT COMPLIANCE 6

A. EFFLUENT LIMITATIONS 6
B. SELF-MONITORING REQUIREMENTS 7
C. SPECIAL CONDITIONS 10

III. STANDARD CONDITIONS 14

A. DUTY TO COMPLY 14
B. DUTY TO REAPPLY 14
C. NEED TO HALT OR REDUCE ACTIVITY NOT A DEFENSE 14
D. DUTY TO MITIGATE 14
E. PROPER OPERATION AND MAINTENANCE 14
F. PERMIT ACTIONS 15
G. PROPERTY RIGHTS 15
H. DUTY TO PROVIDE INFORMATION 15
I. INSPECTION AND ENTRY 15
J. MONITORING AND RECORDS 15
K. FALSIFICATION AND TAMPERING 16
L. SIGNATORY REQUIREMENT 16
M. REPORTING REQUIREMENTS 16
N. TWENTY-FOUR HOUR REPORTING 17
O. OTHER NONCOMPLIANCE–REPORTING 18
P. OTHER INFORMATION 18
Q. BYPASS 18
R. UPSET 19
S. FEES 19

IV. DEFINITIONS AND ABBREVIATIONS 20

I. ELIGIBILITY AND APPLICATION PROCESSES

A. Sources Eligible for Coverage

The Construction Dewatering General Permit (CDGP) applies to discharge of construction dewatering or well development effluent to state surface water in all areas in the State of Montana, except within the boundaries of Indian Lands.

Regulated activities under the CDGP include:

- *In-stream dewatering*: cofferdams, drill hole or pylon development;
- *Surface area dewatering*: water pumped from disturbed surface areas (trenches, sumps, excavation pits, or other excavations associated with construction where sediment-laden ground water or surface water/storm water inflow must be removed); and
- *Ground water dewatering*: Dewatering from wells located within an active area of disturbance is subject to the CDGP. Common methods of ground water dewatering from a construction area include sumps, wells, and well points. In addition, potentially turbid water discharged from well development or well pump tests of any kind are also subject.

B. Sources Excluded from Coverage

1. The Montana Department of Environmental Quality (DEQ) may deny a CDGP request for discharge for the following:

   a) The specific source applying for authorization appears unable to comply with the following requirements:
      - effluent limitations or other terms and conditions of the permit;
      - water quality standards established pursuant to 75-5-301, MCA; or
      - discharges that the regional administrator has objected to in writing.

   b) The discharge is different in degree or nature from discharges reasonably expected from sources or activities within the category described in the CDGP.

   c) A Montana Pollutant Discharge Elimination System (MPDES) permit or authorization for the same operation has previously been denied or revoked.

   d) The discharge is also included within an application or is subject to review under the Major Facility Siting Act, 75-20-101, et seq., MCA.

   e) The discharge will be located in an area of unique ecological or recreational significance. Such determination must be based upon considerations of Montana stream classifications adopted under 75-5-301, MCA, impacts on fishery resources, local conditions at proposed discharge sites, and designations of wilderness areas under 16 USC 1132 or of wild and scenic rivers under 16 USC 1274.

2. DEQ may deny a CDGP request for discharge from dewatering activities at or near a hazardous waste or other type of contaminated site. If the dewatering activity is proposed to be located near a known contamination area, or the permittee has reason to believe that the site or site's groundwater might be contaminated, they must demonstrate that there are no pollutants from the waste site in the dewatering effluent in accordance with this permits' Special Conditions Part II.C.4.

C. Continuing Authorizations under the 2020-issued CDGP

All existing facilities with effective coverage under the 2015-issued CDGP are eligible for coverage under the 2020-issued CDGP unless they are excluded according to the criteria outlined in Part I.B of this permit. Permittees must submit a complete application package for renewed coverage to continue discharge after the expiration date of the 2015-issued CDGP. A complete renewal application consists of:

1. Construction Dewatering Notice of Intent (NOI) Form (NOI-07);
2. Fee for each outfall;
3. Maintain the Dewatering Control Plan (*submittal of the plan is not required*); and
4. A copy of the consultation letter from the Montana Sage Grouse Habitat Conservation Program (if applicable).

The applicant must receive the authorization letter before continuing to discharge to any state surface waters after the effective date of the renewed General Permit.

D. New Authorization under the 2020-issued CDGP

New dischargers seeking to obtain coverage to discharge under the 2020-issued CDGP must submit a complete application package at least 30 days prior to commencing operation, including:

1. Construction Dewatering NOI Form (NOI-07);
2. Fee for each outfall;
3. Preparation of the Dewatering Control Plan (*submittal of the plan is not required*); and
4. A copy of the consultation letter from the Montana Sage Grouse Habitat Conservation Program (if applicable).

The applicant must have the authorization letter from DEQ prior to initiating dewatering discharge to any state surface waters.

E. Modifications to Authorizations under the 2020-issued CDGP

Permittees requiring a modification to an authorization under the 2020-issued CDGP (including adding or changing outfall locations) must submit a complete NOI-07 package to DEQ. The NOI-07 package must consist of:

1. Construction Dewatering NOI Form (NOI-07);
2. Fee for each modified outfall;
3. Updating of the Dewatering Control Plan (*submittal of the plan is not required*); and
4. A copy of the modified consultation letter from the Montana Sage Grouse Habitat Conservation Program (if applicable).

If the regulated industrial activity is within designated sage grouse habitat, any modification due to a change in location requires verification from the Montana Sage Grouse Habitat Conservation Program that may require a consultation letter and/or updates to a consultation letter. If the modification request is outside of sage grouse habitat, no consultation is required.

F. Terminate Permit Coverage

Once covered, permittees are authorized to operate for the duration of the 2020-issued CDGP (until the General Permit has expired) or until DEQ receives a request to terminate coverage. To terminate coverage, the permittee must submit a written request to DEQ (either a letter or a complete Notice of Termination (NOT) Form) indicating the construction dewatering discharge activity has ceased and they no longer require permit coverage. The written request must be signed and certified by the responsible signatory.

After the first calendar year, annual fees will be invoiced in arrears for an authorization open during any part of the previous calendar year. To avoid the accrual of annual fees, the permittee should request to terminate coverage once dewatering has been completed but no later than the end of the calendar year.

In addition to the ability to request a termination, the owner or operator of a facility covered under this General Permit may request to be excluded from coverage under this General Permit by applying for and obtaining an individual MPDES permit. If an individual MPDES permit is issued to the owner or operator of the facility, coverage under this General Permit is terminated on the effective date of the final individual MPDES permit.

G. Transfer Permit Coverage

The owner or operator of a facility covered under this CDGP may request to transfer their authorization coverage to a new owner or operator. To transfer coverage, the permittee must submit a complete Permit Transfer Notification (PTN) Form to DEQ at least 30 days prior to the effective date of the proposed transfer. The PTN constitutes written notice to DEQ under the Montana Water Quality Act that the new owner or operator assumes responsibility and liability for all the terms and conditions in the permit, including permit fees. The PTN form may not be used to transfer permit coverage to a new or different site location or to modify the terms and conditions of the permit.

II. PERMIT COMPLIANCE

A. Effluent Limitations

Beginning on the effective date and lasting through the duration of this General Permit, each permittee requesting coverage under the CDGP will need to meet the applicable turbidity, oil & grease, and chemical use limits described below. Numeric limits apply after treatment and prior to discharge to receiving waters.

1. **Turbidity.** Permittees requesting coverage under this CDGP are required to choose the most applicable of three turbidity categories for each outfall. The three categories are:

   Category A - Minimal impact, including discharges to:

   A.1. Ephemeral waterbodies and storm sewer systems;

   A.2. Dry intermittent waterbody; or

   A.3. Rivers defined as large rivers as listed in **Table 1**.

   Category B - Discharge turbidity limited to prevent impact (most restrictive protection for any receiving waters including perennial and flowing intermittent rivers; lakes; reservoirs; wetlands).

   Category C - Real-time turbidity demonstration (most flexible for longer projects or projects that may occur during periods with more turbid receiving water).

   Table 1 presents the three categories and associated turbidity limits.

Table 1: Turbidity Effluent Limit Categories

Receiving Water and Effluent Limit/Monitoring Requirements for *Duration of Authorized Discharge* (1)		Effluent Turbidity Limit (NTU)		Associated Monitoring
		Maximum Daily	Monthly Average	
A	**Minimal Impact:** **1.** Ephemeral and storm sewer systems **2.** Dry Intermittent: There is no receiving water upstream of the outfall at the time of discharge (2), or **3.** Large Rivers: Big Horn, Clark Fork, Flathead, Kootenai, Madison, Missouri, South Fork Flathead, or Yellowstone	100	100	See Table 2
B	**Discharge Turbidity Limited to Prevent Impact:** turbidity effluent limit for discharge to rivers, lakes, wetlands	20	10	See Table 3
C	**Real-Time Turbidity Demonstration**: discharge turbidity is no greater than the receiving water turbidity	(2,3)	100 (2,3)	See Table 4

Footnotes:

(1) Any discharge to waterbodies classified as A-1 or A-closed (other than to dry drainages) must comply with Category C "Real-Time Demonstration."

(2) If there is an unexpected change in the ambient conditions (i.e. the receiving waters are dry when expected flow or flow when expected dry), the limits will automatically change as described in Part II.A.2 of this permit.

(3) The discharge turbidity limit for Category C will change based on the relative turbidity of the receiving water (i.e., the effluent must always be at or below the upstream turbidity.) The average monthly effluent quality must meet whichever is more stringent: the average monthly background turbidity (no change) or 100 NTU.

2. **Temporary Category Change Due to Changing Ambient Conditions**

   When the ambient conditions of one of two chosen scenarios unexpectedly changes, the limits and monitoring for that permitted outfall will automatically change as follows:

   - **Category A.2** *Dry Intermittent Waterbody*: if this subcategory is chosen and the stream flow conditions change during periods of discharge so that the effluent is discharged into running surface water, the permittee must indicate the condition in the comment field of the NetDMRs, document the change in the Daily Log including date and time, and comply with Category B turbidity limits and associated monitoring.
   - **Category C** *Real-Time Turbidity Demonstration*: If this category is chosen and there is no ambient stream flow, the permittee must indicate the condition in the comment field of the NetDMRs, document the change in the Daily Log including date and time, and comply with Category A.2 turbidity limits and monitoring.

3. **Oil & Grease.** No visible oil film (or be present in concentrations at or in excess of 10 milligrams per liter). If a visual examination of the discharge indicates the presence of hydrocarbons, by sheen, odor, or other sign, the permittee is required to take corrective action as specified under the Special Conditions Part II Section C.3 of this permit, including analyzing a grab sample of the discharge under 40 CFR 136 and ceasing discharge until the situation is resolved.

4. No chemicals, other than anionic polymer coagulants and/or flocculants used in accordance with manufacturer's specifications, may be added to, or discharged with, the construction dewatering effluent. The use of anionic coagulants or flocculants must be included in the facility's Notice of Intent (NOI).

B. Self-Monitoring Requirements

Monitoring of the effluent must be representative of the volume and nature of the discharge. Effluent quality will be monitored at the discharge location (outfall) after all treatment has occurred, prior to entering the receiving water. Monitoring is only required during periods of discharge to state surface waters.

Monitoring results shall be noted on the daily log beginning the effective date of the authorization. In addition, the monitoring results are required to be reported to DEQ on Discharge Monitoring Reports (NetDMRs) by the 28th of the following month. If no discharge occurs, the permittee shall indicate "no discharge" on the monthly NetDMRs.

Samples shall be collected, preserved, and analyzed in accordance with approved procedures listed in 40 CFR Part 136 and any non-detects must meet the Required Reporting Values (RRVs) listed in Circular DEQ-7 unless otherwise specified. **Grab samples of the discharge must be either sent to a laboratory for analysis or there must be access to a turbidity meter.**

The specific monitoring requirements for each outfall will depend on the category that was selected from **Table 1**, and will be indicated on the authorization letter sent to the permittee. Monitoring requirements for each of the three categories are presented in **Tables 2 to 4**, as follows:

Table 2 Category A "Minimal impact"

Table 3 Category B "Discharge turbidity limited to prevent impact"

Table 4 Category C "Real-time turbidity demonstration"

Table 2: Category A "Minimal Impact" - Monitoring Requirements (1)

Parameter	Sample Location	Unit	Sample Frequency	Sample Type	Reporting Requirement
Receiving Water Flow	Upstream	Y/N (2)	1/Day	Visual	--
Turbidity	Effluent	Y/N	1/Day (3)	Visual	--
		NTU	2/Month (4)	Grab	Daily Max and Monthly Avg
Oil and grease	Effluent	Y/N (5)	1/Day	Visual	--
		mg/L	(5)	Grab	Daily Max

Footnotes:

(1) Monitoring is required during any periods with dewatering discharge that reaches state surface water.

(2) Upstream flow monitoring only required for **Category A.2** *(dry intermittent)*. If the permittee is authorized to discharge under Category A.2, but the waterbody has flow during a discharge period, then the permittee must record a "Yes" for the visual observation and must comply with Category B requirements.

(3) Turbidity "Yes" indicates a visual observation of elevated turbidity that is suspected to be above the numeric NTU limit. This situation requires the permittee to take and analyze a grab sample of the discharge and if elevated to take corrective action as specified under the Special Conditions Part II Section C.3 of this permit.

(4) Turbidity grab samples of the discharge must be taken for analysis the first four (4) hours of discharge, then at least twice a month (at least one week apart) thereafter, as well as when the visual observation indicates elevated turbidity. Samples must be taken at times representative of the site's construction activity and the nature of the discharge.

(5) If a visual examination of the discharge indicates the presence of hydrocarbons, by sheen, odor, or other sign, the permittee is required to take corrective action as specified under the Special Conditions Part II Section C.3 of this permit, including analyzing a grab sample of the discharge under 40 CFR 136 and ceasing discharge until the situation is resolved.

Table 3: Category B "Discharge Turbidity Limited to Prevent Impact" Monitoring Requirements (1)

Parameter	Sample Location	Unit	Sample Frequency	Sample Type	Reporting Requirement
Turbidity	Effluent	Y/N	1/Day (2)	Visual	--
		NTU	3/Week (3)	Grab	Daily Max and Monthly Avg.
Oil and grease	Effluent	Y/N (4)	1/Day	Visual	--
		mg/L	(4)	Grab	Daily Max

Footnotes:

(1) Monitoring is required *during any periods with dewatering activity or discharge*.

(2) Turbidity "Yes" indicates a visual observation of elevated turbidity that is suspected to be above the numeric NTU limit. This situation requires the permittee to take and analyze a grab sample of the discharge and take corrective action as specified under the Special Conditions Part II Section C.3 of this permit.

(3) Turbidity grab samples of the discharge must be taken for analysis the first four (4) hours of discharge, then at least three times per week (at least one day apart) thereafter, as well as when the visual observation indicates elevated turbidity. Samples must be taken at times representative of the site's construction activity and the nature of the discharge.

(4) If a visual examination of the discharge indicates the presence of hydrocarbons, by sheen, odor, or other sign, the permittee is required to take corrective action as specified under the Special Conditions Part II Section C.3 of this permit, including analyzing a grab sample of the discharge under 40 CFR 136.

Table 4: Category C "Real-Time Turbidity Demonstration" - Monitoring Requirements (1)					
Parameter	Sample Location	Unit	Sample Frequency	Sample Type	Reporting Requirement
Receiving Water Flow	Upstream	Y/N (2)	1/Day	Visual	--
Turbidity	Effluent	Y/N	1/Day (3)	Visual	--
	Effluent	NTU	2/Month (4)	Grab	Daily Max and Monthly Avg
	Upstream			Grab	
	Difference (4)			Calculated (5)	
Oil and grease	Effluent	Y/N (6)	1/Day	Visual	--
		mg/L	(6)	Grab	Daily Max

Footnotes:
(1) Monitoring is required during any periods with dewatering discharge that reaches state surface water.
(2) If the permittee is authorized to discharge under Category C, but the waterbody has no flow during a discharge period, then the permittee must record a "No" for the visual receiving water flow observation and must comply with Category A.2 requirements.
(3) Turbidity "Yes" indicates a visual observation of elevated turbidity that is suspected to be above the numeric NTU limit. This situation requires the permittee to take and analyze a grab sample of the discharge and take corrective action as specified under the Special Conditions Part II Section C of this permit.
(4) Paired turbidity grab samples of the ambient (upstream) condition and the discharge must be taken for analysis the first four (4) hours of discharge, then at least twice a month (at least one week apart) thereafter, as well as when the visual observation indicates elevated effluent turbidity. Samples must be taken at times representative of the site's construction activity and the nature of the discharge.
(5) The turbidity difference is calculated by subtracting the upstream turbidity minus the effluent turbidity, and must be at or above 0 NTU.
(6) If a visual examination of the discharge indicates the presence of hydrocarbons, by sheen, odor, or other sign, the permittee is required to take corrective action as specified under the Special Conditions Part II Section C.3 of this permit, including analyzing a grab sample of the discharge under 40 CFR 136.

C. Special Conditions

1. **Daily log**. Facilities are required to maintain an observation log during periods of dewatering activities (or dewatering discharge) in accordance with the schedule listed in the monitoring requirements table for the activity. When there is no discharge or activity "NA" or "no discharge" must be indicated. The observation log can be paper or electronic.

   The log must contain: date and time of observations, identification of the person recording the observation, monitoring results (visual or grab sample), inspection observations as identified in the site's Dewatering Control Plan (see below), any problems observed, and any corrective action performed. The permittee must maintain records, including the daily log, for a period of at least three years and make these records available to DEQ upon request.

2. **Dewatering Control Plan (Dewatering Plan).** The permittee is required to develop and implement a written site-specific Dewatering Plan as part of a complete NOI-07 package. The plan must be maintained and available for inspection on-site in either paper or electronic format, and must include:

a) Evaluation, installation, and maintenance of Best Management Practices (BMPs), including but not limited to:
   i. Run-on prevention and/or ground water exclusion methods;
   ii. Erosion control to prevent surface water/stormwater contamination of site (i.e. soil roughening, riprap, mulching, geotextiles, etc.). Excavated material must be transported and stockpiled in such a manner as to prevent its erosion returning to the receiving stream;
   iii. Treatment at dewatering pump intake (i.e., filtering sump, wrapping submersible pump in filter fabric);
   iv. Sediment control for dewatering discharge (i.e. constructed settling pond, dewatering bags, fiber rolls, vegetated buffers, etc.); and
   v. Proper use of anionic flocculants and coagulants, if needed (including maintaining MSDSs and following manufacturers' recommendations).

b) Measures taken to prevent first flush/initial purge discharges from entering state surface waters.

c) Measures taken to prevent spilled or leaking fuels and lubricants from entering the watercourse.

d) Measures taken to minimize erosion from the discharge through flow dissipation devices such as rip rap, baffles, or other methods, as necessary. The discharge shall not cause or result in erosion to the area of the discharge or the surrounding stream banks.

e) Discharge monitoring procedures for the site to ensure that monitoring is effective, and must cover all times of discharge (including weekends and holidays if applicable). The Dewatering Plan must include an identification of the person(s) responsible, monitoring frequency, any necessary equipment and its maintenance, including calibration materials, and record-keeping in the daily log.

f) BMP inspection procedures to prevent breakdowns or failures of the control equipment. The permittee must include the inspection frequency, person(s) responsible, and extent of the inspections (including erosion prevention, dewatering operations, dewatering treatment, and discharge quality), and record-keeping in the daily log. The permittee must also include names/numbers for off-hours notification of responsible personnel in the event of an emergency.

g) Corrective action protocol.

3. **Corrective Action.** Upon any visual observations of BMP failure, inadequate BMPs, elevated turbidity, or an oil sheen, the following steps must be conducted:

   - Take a grab sample for analysis anytime there is an observation of elevated turbidity, oil and grease, and/or other potential contaminants.
   - Cease discharge of dewatering effluent until the issue is resolved.
   - Conduct a site-wide inspection to observe operating conditions and BMP maintenance.

- Address any BMP failures by determining whether there was a failure in design, installation, or maintenance and perform the appropriate measures to fix the failure, including determining whether BMPs should be modified or if additional measures must be taken.
- Document the issues and resolutions in the observation log and update the Dewatering Plan.
- Include a report with the next DMR submittal.

4. **Potential Contamination.** All applicants must determine whether the proposed dewatering activity may be in or near a known area of contamination. Any dewatering within such an area is assumed to transfer contaminants into the receiving water, and is not allowed under this CDGP unless the applicant provides:

   (a) written documentation that the relevant regulatory program (typically within DEQ's Waste Management & Remediation Division) has been consulted. Any jurisdictional remediation program recommendations must be implemented; *and*

   (b) laboratory analysis for the potential contaminants from a pre-discharge groundwater sample. If this is not possible at the time of application, the applicant may work with DEQ to provide the best concentration estimate available through available hydrologic assessments and then, if authorized, conduct sampling within the first four hours of dewatering discharge with *expedited* laboratory results. The pre-discharge sample may be taken after treatment (i.e. carbon adsorption or other treatment), but details on the treatment system used (including pilot system and full-scale) must be included with the NOI.

   DEQ will process the CDGP authorization request if the pre-discharge laboratory results for any relevant parameters (either Reporting Level or Method Detection Level) show either:

   - non-detect at concentrations meeting the Required Reporting Values (RRV) as provided in Circular DEQ-7, or
   - detection at levels at or below the RRV.

   The permittee shall include a copy of the lab results with the NOI package submittal. If the laboratory MDL is not capable of detecting down to the RRV, a detailed explanation of why the results cannot achieve the required detection level must be included with the analysis. DEQ may require additional information including, but not limited to, additional testing during dewatering.

   DEQ may require additional or increased *expedited* monitoring which will be detailed within the authorization letter. If additional tests performed during discharge of dewatering effluent result in concentrations above the RRV, the dewatering discharge to surface water must cease until a solution is found. The permittee must notify DEQ's Water Protection Bureau verbally within 24 hours of the elevated concentration, and follow-up in writing within five days. The permittee cannot resume discharging dewatering effluent until DEQ issues a written authorization.

If contaminants are found in any pre-discharge samples at concentrations above the RRV, or in any required dewatering monitoring if a solution cannot be found to reduce below the RRV, the discharge is not eligible for coverage under the CDGP.

5. **Linear Projects.** Permittees proposing to dewater as part of a linear project may group outfalls (discharges) to similar waterbody types within each category (A.1, A.2, A.3, B, or C). The permittee must include a list of all outfalls for each requested category grouping, and include the latitude/longitude of each outfall and it's receiving water body name.

   After authorization, the permittee shall maintain the outfall list, by category. For any change in outfall locations, the permittee shall re-submit the updated list prior to commencing any discharge to surface waters from a new or changed outfall. DEQ may require the permittee submit a modification request; at a minimum the permittee must submit a modification package if they are requesting authorization under a new category.

   Fees (authorization request, annual, and renewal fees) will be based on the number of Categories within the project.

   Monthly NetDMR reporting will combine the monitoring for all dewatering discharges within a given category (the average turbidity will be the average of all outfalls in that Category, for example).

   The required Dewatering Control Plan can be generic if there is sufficient detail to determine the activities planned for any given location.

6. **Record-keeping.** The permittee must maintain the following records onsite (hard-copy or electronic):
   - 2020-issued CDGP;
   - A copy of the completed and signed NOI-07 form including modification submittals;
   - A copy of DEQ's authorization letter;
   - Discharge Monitoring Reports;
   - Monitoring Records;
   - Daily visual log;
   - Copies of all reports and reports of noncompliance; and
   - The Sage Grouse consultation letter, as applicable.

   These documents are to be made available at the site immediately upon request from a DEQ representative, EPA official, or local official. These records are to be maintained by the permittee for a period of three years.

III. STANDARD CONDITIONS

The permittee shall meet the following standard conditions of MPDES permits.

A. Duty to Comply

The permittee shall comply with all standard conditions in 40 CFR 122.41 and all conditions of this permit. Any permit noncompliance constitutes a violation of the Act and is grounds for enforcement action; for permit termination; revocation and reissuance, or modification; or, for denial of a permit renewal application.

The permittee shall comply with effluent standards or prohibitions established under the Act and rules adopted thereunder including limitations for toxic pollutants in ARM 17.30.1206; section 307(a) of the federal Clean Water Act; and, with standards for sewage sludge use or disposal established under section 405(d) of the Clean Water Act, within the time provided in the regulations that establish these standards or prohibitions, even if the permit has not yet been modified to incorporate the requirement.

The Act provides that any person who violates a permit condition or limitation is subject to a civil penalty not to exceed $25,000 per day for each violation. Any person who willfully or negligently violates 75-5-605, MCA including a permit condition or limitation is subject to criminal penalties not to exceed $25,000 per day of violation, imprisonment for not more than one year, or both. In the case of a second or subsequent conviction for a willful or negligent violation, a person is subject to a fine of not more than $50,000 per day of violation, imprisonment of not more than two years, or both.

The Act provides that any person who violates a permit condition or limitation may be assessed administrative penalties by DEQ not to exceed $10,000 per violation per day with the maximum penalty assessed not to exceed $100,000 for any related series of violations.

B. Duty to Reapply

If the permittee wishes to continue an activity regulated by this permit after the expiration date of this permit, the permittee must first apply for coverage 30 days prior to permit expiration and obtain a new permit or authorization under the applicable general permit.

C. Need to Halt or Reduce Activity Not a Defense

It is not a defense for a permittee in an enforcement action that it would have been necessary to halt or reduce the permitted activity in order to maintain compliance with the conditions of this permit.

D. Duty to Mitigate

The permittee shall take all reasonable steps to minimize or prevent any discharge in violation of this permit that has a reasonable likelihood of adversely affecting human health or the environment.

E. Proper Operation and Maintenance

The permittee shall at all times properly operate and maintain all facilities and systems of treatment and control (and related appurtenances) that are installed or used by the permittee

to achieve compliance with the conditions of this permit. Proper operation and maintenance also includes adequate laboratory controls and appropriate quality assurance procedures. This provision requires the operation of back-up or auxiliary facilities or similar systems that are installed by a permittee only when the operation is necessary to achieve compliance with the conditions of the permit.

F. Permit Actions

This permit may be modified, revoked and reissued, or terminated for cause. The filing of a request by the permittee for a permit modification, revocation and reissuance, or termination, or a notification of planned changes or anticipated noncompliance, does not stay any permit condition.

G. Property Rights

The issuance of this permit does not convey any property rights of any sort, or any exclusive privilege.

H. Duty to Provide Information

The permittee shall furnish to DEQ, within a reasonable time, any information that DEQ may request to determine whether cause exists for modifying, revoking and reissuing, or terminating this permit, or to determine compliance with this permit. The permittee shall also furnish to DEQ, upon request, copies of records required to be kept by this permit.

I. Inspection and Entry

The permittee shall allow the head of DEQ, or an authorized representative, including an authorized contractor acting as a representative of DEQ, upon the presentation of credentials and other documents as may be required by law, to:

1. Enter upon the permittee's premises where a regulated facility or activity is located or conducted, or where records must be kept under the conditions of this permit;
2. Have access to and copy, at reasonable times, any records that must be kept under the conditions of this permit;
3. Inspect at reasonable times any facilities, equipment (including monitoring and control equipment), practices, or operations regulated or required under this permit; and
4. Sample or monitor at reasonable times, for the purpose of assuring permit compliance or as otherwise authorized by the Act, any substances or parameters at any location.

J. Monitoring and Records

1. Representative Sampling

   Samples and measurements taken for the purpose of monitoring must be representative of the monitored activity.

2. Retention of Records

   The permittee shall retain records of all monitoring information, including all calibration and maintenance records and all original strip chart recordings for continuous monitoring instrumentation, copies of all reports required by this permit, and records of

all data used to complete the application for this permit, for a period of at least three years from the date of the sample, measurement, report or application. This period may be extended by request of DEQ at any time.

3. Records Contents

   Records of monitoring information must include:

   a) the date, exact place, and time of sampling or measurements;
   b) the individual(s) who performed the sampling or measurements;
   c) the date(s) analyses were performed;
   d) the individual(s) who performed the analyses;
   e) the analytical techniques or methods used; and,
   f) the results of such analyses.

4. Test Procedures

   Monitoring must be conducted according to test procedures approved under 40 CFR Part 136, unless another method is required under 40 CFR 503.8 or Subchapter N.

K. Falsification and Tampering

The Act provides that any person who falsifies, tampers with, or knowingly renders inaccurate, any monitoring device or method required to be maintained under this permit shall, upon conviction, be punished by a fine of not more than $25,000, imprisonment for not more than six months, or both.

L. Signatory Requirement

All applications, reports or information submitted to DEQ shall be signed and certified as required by ARM 17.30.1323.

M. Reporting Requirements

1. Planned Changes

   The permittee shall give notice to DEQ as soon as possible of any planned physical alterations or additions to the permitted facility. Notice is required only when:

   a) The alteration or addition to the permitted facility may meet one of the criteria for determining whether a facility is a new source under ARM 17.30.1340(2); or

   b) The alteration or addition could significantly change the nature or increase the quantity of pollutant discharged. This notification applies to pollutants that are subject neither to effluent limitations in the permit, nor to notification requirements under ARM 17.30.1343(1)(a).

2. Anticipated Noncompliance

   The permittee shall give advance notice to DEQ of any planned changes in the permitted facility or activity that may result in noncompliance with permit requirements.

3. Transfers

   This permit is not transferable to any person except after notice to DEQ. DEQ may require modification or revocation and reissuance of the permit to change the name of the permittee and incorporate such other requirements as may be necessary or mandatory as required by ARM 17.30.1360 and the Act.

4. Monitoring Reports

   Monitoring results shall be reported at the intervals specified elsewhere in this permit and is subject to the following additional requirements:

   a) Monitoring results must be reported on a Discharge Monitoring Report (DMR);
   b) If the permittee monitors any pollutant more frequently than required by this permit, using test procedures approved under 40 CFR Part 136, the results of such monitoring must be included in the calculation and reporting of the data submitted in the DMR; and,
   c) Calculations for all limitations that require averaging of measurements must use an arithmetic mean unless otherwise specified by DEQ in the permit.

5. Compliance Schedules

   Reports of compliance or noncompliance with, or any progress reports on, interim and final requirements contained in any compliance schedule of this permit shall be submitted no later than 14 days following each schedule date.

N. Twenty-Four Hour Reporting

The permittee shall report any noncompliance that might endanger health or the environment. Any information must be provided orally within 24 hours from the time the permittee becomes aware of the circumstances. A written submission shall also be provided within five days of the time that the permittee becomes aware of the circumstances. The written submission shall contain:

a) A description of the noncompliance and its cause;
b) The period of noncompliance, including exact dates and times;
c) The estimated time noncompliance is expected to continue if it has not been corrected; and,
d) Steps taken or planned to reduce, eliminate, and prevent reoccurrence of the noncompliance.

The following are included as information that must be reported within 24 hours under this provision:

a) Any unanticipated bypass that exceeds any effluent limitation in the permit;
b) Any upset that exceeds any effluent limitation in the permit; and,
c) Violation of a maximum daily discharge limitation for any of the pollutants listed by DEQ in this permit to be reported within 24 hours [see 40 CFR 122.44(g)].

DEQ may waive the written report on a case-by-case basis if the oral report has been received within 24 hours by the Water Protection Bureau, by phone, (406) 444-5546. Written reports shall be submitted to the following address:

Montana Department of Environmental Quality
Water Protection Bureau
PO Box 200901
Helena, Montana 59620-0901

O. Other Noncompliance–Reporting

The permittee shall report all instances of noncompliance not reported under Section N of this permit, at the time monitoring reports are submitted. The reports shall contain the information listed above for written submissions under "Reporting Requirements - Twenty-Four Hour Reporting."

P. Other Information

Where the permittee becomes aware that it failed to submit any relevant facts in a permit application, or submitted incorrect information in a permit application or any report to DEQ, it shall promptly submit such facts or information.

Q. Bypass

1. Bypass Not Exceeding Limitations

   The permittee may allow any bypass to occur that does not cause effluent limitations to be exceeded, but only if it also is for essential maintenance to assure efficient operation. Bypasses are not subject to the provisions under "Notice" and "Prohibition of Bypass" below.

2. Notice

   a) Anticipated Bypass. If the permittee knows in advance of the need for a bypass, it shall submit prior notice, if possible at least ten (10) days before the date of the bypass.

   b) Unanticipated Bypass. The permittee shall submit notice of an unanticipated bypass as required under "Reporting Requirements - Twenty-Four Hour Reporting" above.

3. Prohibition of Bypass

   Bypass is prohibited and DEQ may take enforcement action against a permittee for a bypass, unless:

   a) The bypass was unavoidable to prevent loss of life, personal injury, or severe property damage;

   b) There were no feasible alternatives to the bypass, such as the use of auxiliary treatment facilities, retention of untreated wastes, or maintenance during normal periods of equipment downtime. This condition is not satisfied if adequate back-up equipment should have been installed in the exercise of reasonable engineering

judgment to prevent a bypass that occurred during normal periods of equipment downtime or preventive maintenance; and

c) The permittee submitted notices as required under "Notice" above.

DEQ may approve an anticipated bypass, after considering its adverse effects, if DEQ determines that it will meet these three conditions.

R. Upset

1. Effect of an upset

An upset constitutes an affirmative defense to an action brought for noncompliance with technology based permit effluent limitations if the requirements outlined below under "Conditions Necessary for Demonstration of an Upset" below are met. No determination made during administrative review of claims that noncompliance was caused by upset, and before an action for noncompliance, is final administrative action subject to judicial review.

2. Conditions Necessary for a Demonstration of Upset.

A permittee who wishes to establish the affirmative defense of upset shall demonstrate, through properly signed, contemporaneous operating logs, or other relevant evidence that:

a) An upset occurred, and that the permittee can identify the cause(s) of the upset;

b) The permitted facility was at the time being properly operated;

c) The permittee submitted notice of the upset as required under "Reporting Requirements—Twenty-four Hour Reporting" above and

d) The permittee complied with any remedial measures required under "Duty to Mitigate" above.

3. Burden of proof

In any enforcement proceeding, the permittee seeking to establish the occurrence of an upset has the burden of proof.

S. Fees

The permittee is required to submit payment of an annual fee as set forth in ARM 17.30.201. If the permittee fails to pay the annual fee within 90 days after the due date for the payment, DEQ may impose an additional assessment computed at the rate established under ARM 17.30.201, and suspend the processing of the application for a permit or authorization or, if the nonpayment involves an annual permit fee, suspend the permit, certificate or authorization for which the fee is required. DEQ may lift suspension at any time up to one year after the suspension occurs if the holder has paid all outstanding fees, including all penalties, assessments and interest imposed under this section. Suspensions are limited to one year, after which the permit will be terminated.

IV. DEFINITIONS AND ABBREVIATIONS

"Act" means the Montana Water Quality Act, Title 75, Chapter 5, MCA.

"Arithmetic mean" or "arithmetic average" for any set of related values means the summation of the individual values divided by the number of individual values.

"Average monthly limitation" means the highest allowable average of daily discharges over a calendar month, calculated as the sum of all daily discharges measured during a calendar month divided by the number of daily discharges measured during that month.

"Bypass" means the intentional diversion of waste streams from any portion of a treatment facility.

"CFR" means the Code of Federal Regulations.

"Clean Water Act" means the federal legislation at 33 USC 1251, et seq.

"Daily discharge" means the discharge of a pollutant measured during a calendar day or any 24-hour period that reasonably represents the calendar day for purposes of sampling. The daily discharge is calculated as the average measurement of the pollutant over the day.

"Department" means the Montana Department of Environmental Quality (DEQ). Established by 2-15-3501, MCA.

"Director" means the Director of the Montana Department of Environmental Quality.

"Discharge" when used without qualification means discharge of a pollutant.

"Discharge of a pollutant(s)" means any additional of any pollutant or combination of pollutants to state water from any point source. This definition includes additions of pollutants into waters of the state from: surface runoff which is collected or channeled by man; discharges through pipes, sewers, or other conveyances owned by the state, municipality, or other person which do not lead to a treatment works. This term does not include an addition of pollutants by any indirect discharger, as defined in ARM 17.30.1304.

"EPA" or "USEPA" means the United States Environmental Protection Agency.

"Ephemeral Stream" means a stream or a part of a stream, which flows only in direct response to precipitation in the immediate watershed or in response to the melting of a cover of snow and ice and whose channel bottom is always above the local water table.

"Grab sample" means a sample that is taken from a waste stream on a one-time basis without consideration of flow rate of the effluent or without consideration for time.

"Intermittent Stream" means a stream or reach of a stream that is below the local water table for at least some part of the year, and obtains its flow from both surface run-off and groundwater discharge.

“Maximum Daily Limit” means the highest allowable discharge of a pollutant during a calendar day. Expressed as units of mass, the daily discharge is cumulative mass discharged over the course of the day. It is the arithmetic average of all measurements taken that day.

“Mixing zone” means an area established in a permit issued by DEQ where water quality standards may be exceeded, subject to conditions that are imposed by DEQ and that are consistent with rules adopted by the board

“Outfall” means the place where a point source discharges effluent into the receiving water. For each outfall, there typically is at least one monitoring location. Although the monitoring location might or might not be at the actual point of discharge, samples taken at the monitoring location should be representative of the discharge.

“Point Source” means any discernible, confined, or discrete conveyance, including, but not limited to, any pipe, ditch, channel, tunnel, conduit, well, discrete fissure, container, rolling stock, concentrated animal feeding operation, landfill leachate collection system, vessel, or other floating craft, from which pollutants are or may be discharged. This term does not include return flows from irrigated agriculture or agricultural storm water runoff.

“Pollutant” means dredged spoil, solid waste, incinerator residue, sewage, garbage, sewage sludge, munitions, chemical wastes, biological materials, radioactive materials, heat, wrecked or discarded equipment, rock, sand, cellar dirt, and industrial, municipal, and agricultural wastes discharged into water. The terms "sewage," "industrial waste," and "other wastes" as defined in 75-5-103, MCA, are interpreted as having the same meaning as pollutant.

“Required Reporting Values” means the minimum level of quantification or detection that must be achieved in reporting all monitoring results required by this permit.

“State Waters” means a body of water, irrigation system, or drainage system, either surface or underground. The term does not apply to: ponds or lagoons used solely for treating, transporting, or impounding pollutants; or, irrigation waters or land application disposal waters when the waters are used up within the irrigation or land application disposal system and the waters are not returned to state waters.

“TSS” means the pollutant parameter total suspended solids.

“Upset” means an exceptional incident in which there is unintentional and temporary noncompliance with technology-based permit effluent limitations because of factors beyond the reasonable control of the permittee. An upset does not include noncompliance to the extent caused by operational error, improperly designed treatment facilities, inadequate treatment facilities, lack of preventive maintenance, or careless or improper operation.

APPENDIX C

PIONEER GEOTECHNICAL REPORTS

RESTORING OUR ENVIRONMENT ● DESIGNING OUR FUTURE

Garden City Compost Geotechnical Report

Missoula, Montana

Prepared for:

City of Missoula

Garden City Compost/Wastewater Division
435 Ryman Street
Missoula, MT 59802

Prepared by:

Pioneer Technical Services, Inc.
3412 Colonial Drive
Helena, Montana 59601

February 2024

Table of Contents

1 INTRODUCTION 1

2 INVESTIGATION 1

2.1 Site Description 1

2.2 Geotechnical Investigation 1

2.2.1 Soil Lithology 1

2.2.2 Groundwater Conditions 2

2.3 Laboratory Testing 3

2.3.1 Index Properties 3

2.3.2 Chemical Properties 3

3 ANALYSES AND RECOMMENDATIONS 4

3.1 Proposed Construction 4

3.2 Subsurface Materials Discussion 4

3.3 Monolithic Mat Slab 4

3.4 Lateral Earth Pressures 6

3.5 Seismic Considerations 6

3.6 Underground Utilities and Trench Stability 6

3.7 Shrink/Swell Characteristics 7

4 EARTHWORK TESTING 7

5 BASIS OF RECOMMENDATIONS 7

6 REFERENCES 9

List of Figures

Figure 1. Site Map

List of Tables

Table 1: Test Pit Lithology Summary 2
Table 2: Laboratory Index Data 3
Table 3: Corrosivity Testing 3
Table 4: Structural Fill (MPW 4-inch Minus Subbase Course) 5
Table 5: Lateral Earth Coefficients and Pressures 6
Table 6: Seismic Coefficients 6
Table 7: Compaction Testing Frequency 7
Table 8: Required Relative Compaction 7

List of Appendices

Appendix A Test Pit Logs
Appendix B Photograph Log
Appendix C Laboratory Data
Appendix D Seismic Data

Revision No.	Author	Version	Description	Date
Rev 0	Sean Harris	Draft	Internal Review	January 2024
Rev 1	Michael Browne	Draft	Client Review	January 19, 2024
Rev 1	Michael Browne	Final	Client Submittal	February 9, 2024

1 INTRODUCTION

The City of Missoula contracted Pioneer Technical Services, Inc. (Pioneer) to complete a geotechnical investigation for proposed new compost pads at Garden City Compost in Missoula, Montana.

The purpose of the geotechnical investigation was to explore subsurface conditions at the proposed site and provide information on soil characteristics, foundation recommendations, soil bearing capacity, lateral earth loads, soil corrosivity concerns, seismic zone, groundwater conditions, concrete flatwork recommendations, material specifications, and discussion of any unusual conditions. This report provides conclusions of the investigation, results of laboratory testing and analyses, and design recommendations. Anderson-Montgomery is the project civil engineer.

2 INVESTIGATION

2.1 Site Description

Garden City Compost facility is located at 1125 Clark Fork Lane, Missoula, Montana. The site is generally flat and contains remnants of a former wood mill that previously occupied the site. The site's legal description is Section 18 in Township 13 North, Range 19 West.

2.2 Geotechnical Investigation

Six total geotechnical test pits (TP-01 through TP-06) were excavated on November 8, 2023.Test pit TP-01 was excavated using a CAT 446A excavator and the remaining test pits were excavated using a CAT 416D excavator provided and operated by the City of Missoula. The approximate locations of the test pits are shown on the site map included as Figure 1. Pioneer logged the test pit lithology, visually field classified the soils, and collected bulk samples for laboratory testing.

2.2.1 Soil Lithology

Predominantly, fill consisting of wood debris, compost, and dimensional lumber was encountered across the site underlain by native granular soils. Fill and soil lithology are summarized in Table 1.

Table 1: Test Pit Lithology Summary

TEST PIT NO.	DEPTH (feet)	LITHOLOGY
TP-01	0 – 7.0	FILL, wood debris
	7.0 – 10.0	Poorly-Graded GRAVEL with Sand and Cobbles
TP-02	0 – 4.0	FILL, wood debris
	4.0 – 10.0	Poorly-Graded SAND with Silt
	10.0 – 11.0	Poorly-Graded GRAVEL with Sand and Cobbles
TP-03	0 – 6.0	FILL, wood debris
	6.0 – 7.0	Poorly-Graded GRAVEL with Sand and Cobbles
TP-04	0 – 4.0	FILL, wood debris
	4.0 – 7.0	Poorly-Graded GRAVEL with Silt, Sand, and Cobbles
TP-05	0 – 9.0+	FILL, dimensional lumber scraps Note: Groundwater encountered at 5.0 ft depth, bottom extents of dimensional lumber was beyond the depth extents of test pit.
TP-06	0 – 9.0	FILL, wood debris
	9.0 – 10.0	Poorly-Graded GRAVEL with Sand and Cobbles

Geologically the site is in quaternary alluvium deposits of "*well-rounded gravel and sand with lesser amounts of silt and clay"* (MBMG, 1998). This was consistent with the exploration as site soils beneath the fill generally classified as poorly graded gravel with sand with varying amounts of silt and cobbles, were encountered in all the test pits.

Appendix A contains test pit logs which list detailed soil descriptions for each of the test pits and Appendix B contains photographs of the investigation. The stratification lines shown on the test pit logs represent the approximate boundary between soil types as observed within the test pits. The actual *in-situ* transition is variable because of the nature and depositional characteristics of natural soils and uncertainty in historic fill placement. Interpolation of subsurface conditions beyond the location of the test pits may be unreliable as soil conditions can change rapidly in both lateral and vertical directions.

2.2.2 Groundwater Conditions

Groundwater was encountered in TP-05 at a depth of approximately 5 feet during the investigation. Fill extended to a depth greater than the 9-foot excavation depth in TP-05, thus groundwater will likely be encountered during construction/removal of fill. Contractor should be prepared to dewater the site, or portions of the site, during construction.

Groundwater was not encountered in the other five test pits (TP-01, TP-02, TP-03, TP-04, and TP-06). All of the test pits have a similar surface elevation.

Review of local well logs on the Montana Bureau of Mines and Geology (MBMG) Ground-Water Information Center website (MBMG GWIC, 2023) indicate the static groundwater levels for nearby wells were 18 to 22 feet below ground surface at the time the wells were installed.

The groundwater level likely fluctuates seasonally. Groundwater may pose construction concerns and dewatering efforts may be required during construction.

2.3 Laboratory Testing

Pioneer collected samples from the test pits at select depths and the samples were tested for their index (physical) and chemical properties.

2.3.1 Index Properties

A summary of the laboratory testing results is presented in Table 2. Appendix C provides the complete laboratory testing results.

Table 2: Laboratory Index Data

TEST PIT NO.	DEPTH (ft)	USCS SYMBOL	LIQUID LIMIT (%)	PLASTIC LIMIT (%)	PLASTICITY INDEX (%)	GRADATION ANALYSIS		
						GRAVEL (%)	SAND (%)	FINES (%)
01	7-10	GP	-	-	-	73	11	2
04	4-7	GM	NV	NP	NP	55	31	14

[1] NV = non-viscous
[2] NP = non-plastic

The moisture content of native soils ranged from 20 to 27 percent with an average value of 23.5 percent.

2.3.2 Chemical Properties

Corrosivity testing (soluble sulfate, pH, and resistivity) was conducted to determine if the native soils may potentially be corrosive to buried concrete or metal associated with the proposed construction. The pH and soluble sulfate testing were subcontracted to Alpine Analytical located in Helena, Montana. A summary of corrosivity testing results is presented in Table 3.

Table 3: Corrosivity Testing

TEST PIT NO.	DEPTH (ft)	pH (s.u.)	Marble pH (s.u.)	RESISTIVITY (ohm-cm)	SOLUBLE SULFATE (%)
TP-02 & TP-03 Composite	6-8	6.70	6.95	770	0.0132

Criteria from the American Water Works Association and by the Portland Cement Association (PCA) were used to evaluate soil corrosiveness (PCA, 2007).

The native soil is considered corrosive to buried metallic elements. Cathodic protection should be used for on-site metallic utilities. Alternatively, use of high-density polyethylene (HDPE) or polyvinyl chloride (PVC) utility pipes and culverts is recommended in lieu of metallic products.

The sulfate testing results indicate the on-site soil has a negligible exposure to concrete sulfate attack. Type I or Type I/II cements are acceptable for all cast-in-place structural concrete exposed to the native soil.

3 ANALYSES AND RECOMMENDATIONS

3.1 Proposed Construction

The proposed construction will consist of two composting pads, a concrete travel pad, biofilters, and a curing bunker. It is Pioneer's understanding that the proposed composting pads and components will be constructed as monolithic mat slabs. Debris encountered across the site is not suitable to support the proposed infrastructure. The native site soils, underlaying the debris, are suitable to support the proposed buildings on slab-on-grade foundation system.

3.2 Subsurface Materials Discussion

A substantial amount of fill (woody debris), associated with the former wood mill on the site, was encountered during the investigation. Fill predominantly consists of wood, compost, organic matter, and dimensional lumber. The fill/woody debris is not suitable to support the proposed infrastructure. Pioneer recommends removing and replacing all woody debris located under the proposed infrastructure footprint and replacing with granular soils placed in compacted lifts.

The fill is underlain by native poorly-graded gravels with sand and cobbles including various amounts of silt. These native soils are suitable to support the proposed structures. Imported granular soil fill will be required to bring the site grade back up to the desired elevation after removal of the uncontrolled fill. Specific recommendations are discussed in subsequent sections.

3.3 Monolithic Mat Slab

Pioneer understands the proposed compost pads and components will be founded on a monolithic, structural concrete slab. Pioneer recommends the following mat slab recommendations:

1. Excavate and remove woody debris fill down to native subgrade. Based on test pit logs, native subgrade is approximately 4 to 9+ feet below existing ground surface. If additional fill (disturbed soil, garbage, debris, or other man-made or deleterious material) is observed, continue excavation until native subgrade is encountered.
2. Provide an opportunity for the engineer to inspect the bottom of the excavation. Excavate soft spots or unsatisfactory materials (fill, fine-grained soils), if observed.
3. Dewater, if warranted.

4. Compact the subgrade soils, under slab-on-grade areas, to a standard relative compaction of at least 95%.
5. Place structural fill meeting the gradation specifications listed in Table 4 to the bottom of the mat slab elevation. Based on test pits, Pioneer anticipates this structural fill will be a minimum 4-feet thick.
    a. Montana Public Works (MPW) 4-inch minus subbase course is recommended due to being locally available and is considered a 'non frost heaving' soil.
    b. Alternative gradations may be acceptable upon engineer approval. Submit particle-size distribution (ASTM D6913) to engineer to determine acceptability of proposed alternative structural fill sources. Use of Polystyrene insulation, between the structural fill and concrete slab, is warranted for alternative structural fill sources that are 'frost susceptible'.
    c. Moisture condition structural fill to plus/minus 2% optimum moisture content and place in 8-inch (maximum) loose lifts. Compact each lift to a standard relative compaction of at least 95% (ASTM D698).

Table 4: Structural Fill (MPW 4-inch Minus Subbase Course)

SIEVE SIZE	PERCENT PASSING
4-inch	100
No. 4	25 - 60
No. 40	10 - 30
No. 200	2 - 10

6. A vapor barrier is not warranted from a geotechnical perspective. The design team should specify if vapor barrier is warranted based on other design criteria. If vapor barrier is warranted, place a 15-mil polyolefin vapor barrier over the structural fill prior to pouring the concrete slab.
7. Form and construct the concrete slab.

For foundations constructed on structural fill Pioneer recommends the following criteria for structural design of the foundation:

1. Moduli of subgrade reaction (k_s) of 300 pounds per square inch per inch of deflection.
2. Moduli of elasticity (E_s) value of 14,000 pounds per square inch and Poisson's ratio (υ) of 0.30 for the structural fill.
3. Friction coefficient (μ) of 0.50 for sliding against the prepared structural fill.
4. With the compacted subgrade in place, Pioneer recommends an <u>allowable soil bearing capacity of 3,000 pounds per square foot (psf)</u>.
5. Pioneer anticipates total and differential settlement of the mat slab designed and placed as recommended will be less than 1 inch and ½-inch, respectively.

Ensure there is positive drainage away from the open excavation to keep all surface water from draining into the excavation. This recommendation also applies to final grading, where positive drainage must be in place around the entire mat slab perimeter.

3.4 Lateral Earth Pressures

Structural fill should be used as backfill adjacent to the structures. Place the backfill in 8-inch (maximum) loose lifts and compact each lift to a standard relative compaction of at least 95%.

Reinforced concrete wall design can use the following list of lateral pressure loading values based on conservatively assumed strength values from the structural fill for an internal angle of friction (ϕ) equal to 34°, a cohesion (c) value of 0 psf, a moist unit weight of 135 pounds per cubic foot (pcf), and an equivalent fluid weight of 38 pcf. Lateral earth coefficients (based on level backfill) are listed in Table 5.

Table 5: Lateral Earth Coefficients and Pressures

LATERAL EARTH PRESSURE	COEFFICIENT (K)
Active	0.283
Passive	3.537
At-Rest	0.441

These values can also be used for any potential retaining walls planned for the project provided similar backfill is used.

3.5 Seismic Considerations

Seismic coefficients were estimated using ASCE7-22 and Risk Category II and are presented in Table 6. The seismic coefficients data sheet is included in Appendix D.

Table 6: Seismic Coefficients

Site Soil Class	D
Seismic Design Category	D
Mapped Spectral Response Acceleration Parameter, S_S for 0.2 second	0.44g
Mapped Spectral Response Acceleration Parameter, S_1 for 1.0 second	0.13g
Adjusted Maximum Considered Earthquake Spectral Response Acceleration Parameter, S_{MS}	0.62g
Adjusted Maximum Considered Earthquake Spectral Response Acceleration Parameter, S_{M1}	0.35g
Design Spectral Response Acceleration Parameter, S_{DS}	0.41g
Design Spectral Response Acceleration Parameter, S_{D1}	0.23g

3.6 Underground Utilities and Trench Stability

For utility trench excavations, the trench soils meet the Occupational Safety and Health Administration's 29 Code of Federal Regulations Part 1926 requirements for a Type C soil. The steepest unsupported slope within a Type C soil is set at 1.5 horizontal to 1 vertical (1.5H:1V).

Use Type I bedding soils beneath and up to 6 inches above the top of the pipe. Type I bedding soils are ¾-inch minus granular soils having a soluble sulfate content less than 0.1% and a resistivity greater than 3,000 ohm-centimeters. The on-site soils can be used as trench backfill above the bedding soils. Care must be taken to process native soils such that cobbles and

boulders are not placed next to utilities. Place the trench soils in 8-inch (maximum) loose lifts and compact to a standard relative compaction of at least 95%.

3.7 Shrink/Swell Characteristics

The volume change potential of the subgrade soil is considered low based on the granular composition of the soil. Regardless, Pioneer recommends grades (minimum 2%) should be designed and constructed to promote positive drainage away from the structure perimeter.

4 EARTHWORK TESTING

Pioneer recommends that a qualified inspector perform compaction testing for subgrade, structural fill, and backfill. Table 7 lists the suggested minimum compaction testing frequency.

Table 7: Compaction Testing Frequency

LOCATION	FREQUENCY
Beneath Mat Slab	1 test per 400 square feet per lift
Foundation Wall Backfill	1 test per 50 linear feet per lift

Table 8 summarizes the material compaction specifications. Compaction testing should be performed on subgrade, base course, and backfill. Frozen soils, ice particles, and soils with organics, debris, or deleterious materials are not suitable for use as fill. Appropriate winter construction techniques must be used, as warranted, to protect subgrade, fill, and cast concrete from frost. Fill cannot be placed on top of frozen soils. The maximum loose lift thickness is 8 inches.

Table 8: Required Relative Compaction

LOCATION	REQUIRED MINIMUM RELATIVE COMPACTION	STANDARD
Beneath Mat Slab	95%	ASTM D698
Foundation Wall Backfill	95%	ASTM D698

Concrete testing frequency should be performed in accordance with project specifications and/or structural engineer requirements.

5 BASIS OF RECOMMENDATIONS

The analyses and recommendations submitted in this report are based upon the test pits completed during the subsurface investigation and with general site familiarity. Often, variations occur within the subgrade, the nature and extent of which do not become evident until additional exploration or construction is conducted. Pioneer recommends geotechnical involvement be continued throughout the project to ascertain the recommendations presented herein (Geotechnical Report) have been properly interpreted both during design and construction. These services will reduce potential for misinterpretation of geotechnical design recommendations.

Pioneer also recommends a geotechnical engineer be notified during the foundation excavation construction phase to evaluate the foundation soils and verify their resemblance to those encountered during the site investigation.

This report is based on Pioneer's understanding of the preliminary design associated with the proposed Garden City Compost facility compost pads. If the location or proposed elevation profile changes, please consult Pioneer to verify that these recommendations are still applicable.

This report is for the exclusive use of the City of Missoula and their design team. In the absence of Pioneer's written approval, Pioneer makes no representation and assumes no responsibility to other parties regarding this report. The data, analyses, and recommendations may not be appropriate for other structures or purposes. Other parties contemplating other structures or purposes should contact Pioneer.

Services performed by Pioneer's personnel for this project have been conducted with the level of care and skill ordinarily exercised by members of the profession currently practicing in this area under similar budget and time restraints. No warranty, expressed or implied, is made.

Professional Certification
I hereby certify that this report was prepared
by me and that I am a duly Licensed Professional
Engineer under the laws of the State of Montana.

Mike Browne, P.E.
Geotechnical Engineer

Sean Harris, E.I.
Staff Geotechnical Engineer

6 REFERENCES

MBMG, 1998, Preliminary Geologic Map of the Montana Part of the Missoula West 30' x 60' Quadrangle: Montana Bureau of Mines and Geology Open-File Report 373, Accessed January 2024.

MBMG GWIC, 2023. Montana Bureau of Mines and Geology Ground-Water Information Center, Accessed December 2023, http://data.mbmg.mtech.edu/mapper/mapper.asp?view=Wells&

PCA, 2007. Concrete Technology, Effects of Substances on Concrete and Guide to Protective Treatments.

Figures

Figure 1. Site Map

TEST PIT LOCATION MARKER

N

DISPLAYED AS:
COORD SYS/ZONE: MSP
DATUM: NAD83
UNITS: International Feet
SOURCE: Pioneer

SCALE IN FEET
0 25 50

FIGURE 1

PIONEER TECHNICAL SERVICES, INC.
3241 COLONIAL DRIVE
HELENA, MT
(406) 457-8252

GARDEN CITY
COMPOST FACILITY
TEST PIT LOCATIONS
PLAN VIEW

DATE: 1/12/2024

1/12/2024 1:10:56 PM Z:\SHARED\ACTIVE PROJECTS\GEOTECH\BH LOCATION FIGURES\GARDEN CITY COMPOST.DWG

Appendix A
Test Pit Logs

GENERAL NOTES

DRILLING & SAMPLING SYMBOLS:

SS:	Split Spoon - 1-3/8" I.D., 2" O.D., unless otherwise noted	CA:	Casing Advancer
ST:	Thin-Walled Tube - 3" O.D., unless otherwise noted	DA:	Drill Auger
CB:	California Sampler - 2" I.D., 2.5" O.D., unless otherwise	HA:	Hand Auger
DB:	noted Diamond Bit Coring - 4", NX, unless otherwise noted	RB:	Rock Bit
BS:	Bulk Sample or Auger Sample	GS:	Grab Sample

The number of blows required to advance a standard 2-inch O.D. split-spoon sampler (SS) the last 12 inches of the total 18-inch penetration with a 140-pound hammer falling 30 inches is considered the "Standard Penetration" or "N-value". The field blow counts are reported for each 6-inch interval, or portion thereof if greater than 50 blows are required to advance the full 6-inch interval. For over-sized split spoon samplers, non-standard hammers, or non-standard drop heights, the field penetration values are reported on the bore log. The values must be corrected to obtain the N-value.

WL:	Water Level	WS:	While Sampling	NE:	Not Encountered
WCl:	Wet Cave in	WD:	While Drilling		
DCI:	Dry Cave in	BCR:	Before Casing Removal		
AB:	After Boring	ACR:	After Casing Removal		

Water levels indicated on the boring logs are the levels measured in the borings at the times indicated. Groundwater levels at other times and other locations across the site could vary. In pervious soils, the indicated levels may reflect the location of groundwater. In low permeability soils, the accurate determination of groundwater levels may not be possible with only short-term observations.

DESCRIPTIVE SOIL CLASSIFICATION: Soil classification is based on the Unified Soil Classification System, Coarse Grained Soils have more than 50% of their dry weight retained on a #200 sieve; their principal descriptors are: gravel or sand. Cobbles and boulders are not part of the USCS system but are included, when present, as percentages. Fine Grained Soils have less than 50% of their dry weight retained on a #200 sieve; depending on their plasticity, they are described as clays or silts. Major constituents may be added as modifiers and minor constituents may be added according to the relative proportions based on grain size. In addition to gradation, coarse-grained soils are defined on the basis of their in-place relative density and fine-grained soils on the basis of their consistency.

CONSISTENCY OF FINE-GRAINED SOILS

Unconfined Compressive Strength, Qu, psf	Standard Penetration or N-value (SS) Blows/Ft.	Consistency
< 500	< 2	Very Soft
500 - 1,000	2 - 4	Soft
1,001 - 2,000	5 - 8	Medium Stiff
2,001 - 4,000	9 - 15	Stiff
4,001 - 8,000	16 - 30	Very Stiff
8,000 +	30 +	Hard

RELATIVE DENSITY OF COARSE-GRAINED SOILS

Standard Penetration or N-value (SS) Blows/Ft.	California Barrel (CB) Blows/Ft.	Relative Density
0 - 4	0 - 6	Very Loose
5 - 10	7 - 18	Loose
11 - 30	19 - 58	Medium Dense
31 - 50	59 - 98	Dense
50 +	99 +	Very Dense

RELATIVE PROPORTIONS OF SAND AND GRAVEL

Descriptive Term(s) of other constituents	Percent of Dry Weight
Trace	< 15
With	15 - 29
Modifier	> 30

USCS* GRAIN SIZE TERMINOLOGY

Major Component of Sample	Particle Size
Boulders	Over 12 in. (300mm)
Cobbles	12 in. to 3 in. (300mm to 75 mm)
Gravel	3 in. to #4 sieve (75mm to 4.75 mm)
Sand	#4 to #200 sieve (4.75mm to 0.075mm)
Silt or Clay	Passing #200 Sieve (0.075mm)

*For AASHTO grain size the #4 sieve is replaced with the #10 sieve

RELATIVE PROPORTIONS OF FINES

Descriptive Term(s) of other constituents	Percent of Dry Weight
Trace	< 5
With	5 - 12
Modifiers	> 12

PLASTICITY DESCRIPTION

Term	Plasticity Index
Non-Plastic	0
Slightly	1 - 5
Low	6 - 10
Medium	11 - 20
High	21 - 40
Very Highly	> 40

PIONEER TECHNICAL SERVICES, INC.

UNIFIED SOIL CLASSIFICATION SYSTEM

Criteria for Assigning Group Symbols and Group Names Using Laboratory Tests [A]					Soil Classification	
					Group Symbol	Group Name [B]
Coarse Grained Soils More than 50% retained on No. 200 sieve	Gravels More than 50% of coarse fraction retained on No. 4 sieve	Clean Gravels Less than 5% fines	Cu ≥ 4 and 1≤ Cc ≤ 3		GW	Well-graded Gravel [F]
			Cu < and/or 1 > Cc > 3		GP	Poorly graded gravel [F]
		Gravels with Fines More than 12% fines	Fines classify as ML or MH		GM	Silty Gravel [F,G,H]
			Fines classify as CL or CH		GC	Clayey Gravel [F,G,H]
	Sands 50% or more of coarse fraction passes No. 4 sieve	Clean Sands Less than 5% fines	Cu ≥ 6 and 1 ≤ Cc ≤ 3		SW	Well-graded Sand [I]
			Cu < 6 and/or 1 > Cc > 3		SP	Poorly graded Sand [I]
		Sands with Fines More than 12% fines	Fines classify as ML or MH		SM	Silty Sand [G,H,I]
			Fines classify as CL or CH		SC	Clayey Sand [G,H,I]
Fine-Grained Soils 50% or more passes the No. 200 sieve	Silts and Clays Liquid limit less than 50	inorganic	PI > 7 and plots on or above "A" line		CL	Lean Clay [K,L,M]
			PI < 4 or plots below "A" line		ML	Silt [K,L,M]
		organic	Liquid limit - oven dried	< 0.75	OL	Organic Clay [K,L,M,N]
			Liquid limit - not dried			Organic Silt [K,L,M,Q]
	Silts and Clays Liquid Limit 50 or more	inorganic	PI plots on or above "A" Line		CH	Fat Clay [K,L,M]
			PI plots below "A" line		MH	Elastic Silt [K,L,M]
		organic	Liquid limit - oven dried	< 0.75	OH	Organic Clay [K,L,M,P]
			Liquid limit - not dried			Organic Silt [K,L,M,Q]
Highly organic soils	Primarily organic matter, dark in color, and organic odor				PT	Peat

[A] Based on the material passing the 3-in. (75-mm) sieve

[B] If field sample contained cobbles or boulders, or both, add "with cobbles or boulders, or both" to group name.

[C] Gravels with 5 to 12% fines require dual symbols: GW-GM well-graded gravel with silt, GW-GC well-graded gravel with clay, GP-GM poorly graded gravel with silt. GP-GC poorly graded gravel with clay.

[D] Sands with 5 to 12% fines require dual symbols: SW-SM well-graded sand with silt, SW-SC well-graded sand with clay, SP-SM poorly graded sand with silt, SP-SC poorly graded sand with clay.

[E] $Cu = D_{60} / D_{10} \quad Cc = \dfrac{(D_{30})^2}{D_{10} \times D_{60}}$

[F] If soil contains ≥ 15% sand, add "with sand" to group name.

[G] If fines classify as CL-ML, use dual symbol GC-GM, or SC-SM.

[H] If fines are organic, add "with organic fines" to group name.

[I] If soil contains ≥ 15% gravel, add "with gravel" to group name.

[J] If Atterberg limits plot in shaded area, soil is a CL-ML, silty clay.

[K] If soil contains 15 to 29% plus No. 200, add "with sand" or " with gravel," whichever is predominant.

[L] If soil contains ≥ 30% plus No. 200, predominantly sand, add "sandy" to group name.

[M] If soil contains ≥ 30% plus No. 200, predominantly gravel, add "gravelly" to group name.

[N] PI ≥ 4 and plots on or above "A" line.

[O] PI < 4 or plots below "A" line.

[P] PI plots on or above "A" line.

[Q] PI plots below "A" line.

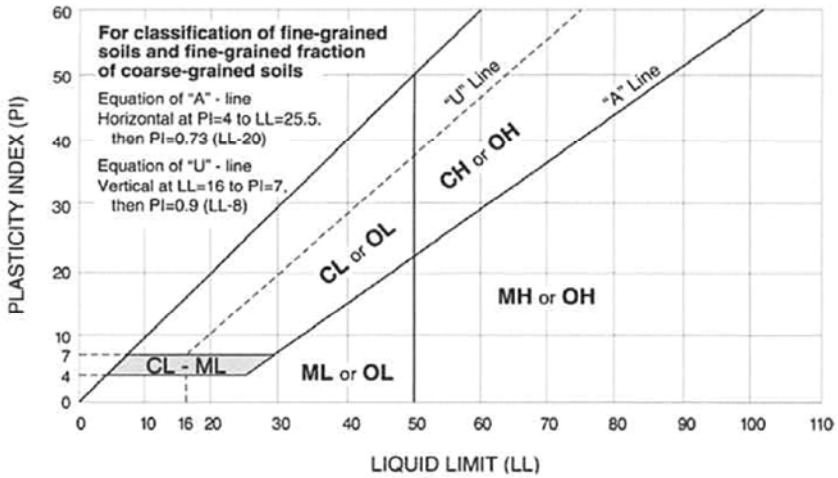

PIONEER TECHNICAL SERVICES, INC.

201 E Broadway Ste C
Helena, MT 59601
Phone: 406-457-8252
Fax: 442-1158

LOG OF BORING

Boring TP-01

PIONEER TECHNICAL SERVICES, INC.

Project: Garden City Compost	**Rig:** Cat 446D **Hammer:** N/A	**Boring Location** N 991,571.7 ft **Coordinates:** E 833,128.3 ft	**Station:** **Offset:**
Project Number: / **UPN:**	**Boring Diameter:** TP	**System:** MT S.P. (E) **Datum:** NAD83	**Top of Boring Elevation:** 3152 ft
Date Started: 11/8/23 / **Date Finished:** 11/8/23	**Drilling Fluid:** None	**Location Source:** Handheld GPS, Uncorrected	**Elevation Source:** Estimate
Driller: J. Duffin **Logger:** S. Harris	**Abandonment Method:** Backfilled with Cuttings	**Township Range and Section:**	

Depth (ft) / Elev. (ft)	Operation	Sample Type	Recovery (%)	RQD (%)	Blow Count	Lithology	Material Description	Depth (ft)	MC (%)	LL	PL	-200 (%)	DD	Remarks and Other Tests
2 / 3150.0							FILL, Wood debris.							
4 / 3148.0														
6 / 3146.0														
8 / 3144.0							Poorly-Graded GRAVEL with sand (GP), Cobbles, moist, gray, coarse grained, rounded. Cobbles up to 6 inches.	7.0				2		
10 / 3142.0								10.0						

Boring Depth: 10.0 ft, *Elevation: 3142.0 ft*

Water Level Observations	During Drilling: **Not Encountered**	Remarks:
After Drilling:	After Drilling:	

(2) MDT LOG OF BORING - MDT_REVISED_2009+(CPT_IMPORT).GDT - 1/19/24 14:23 - C:\USERS\SHARRIS\PIONEER TECHNICAL SERVICES\PIONEER GEOTECH - MISSOULACOMPOST\2023\LOGS\GARDEN CITY COMPOST_TP LOGS 2023.GPJ

201 E Broadway Ste C
Helena, MT 59601
Phone: 406-457-8252
Fax: 442-1158

LOG OF BORING

Boring TP-02

PIONEER TECHNICAL SERVICES, INC.

Project: Garden City Compost	**Rig:** CAT 416D **Hammer:** N/A	**Boring Location** N 991,533.8 ft **Coordinates:** E 833,216.2 ft	**Station:** **Offset:**
Project Number: / **UPN:**	**Boring Diameter:** TP	**System:** MT S.P. (E) **Datum:** NAD83	**Top of Boring Elevation:** 3152 ft
Date Started: 11/8/23 / **Date Finished:** 11/8/23	**Drilling Fluid:** None	**Location Source:** Handheld GPS, Uncorrected	**Elevation Source:** Estimate
Driller: J. Duffin **Logger:** S. Harris	**Abandonment Method:** Backfilled with Cuttings	**Township Range and Section:**	

Depth (ft) / Elev. (ft)	Operation	Sample Type	Recovery (%)	RQD (%)	Blow Count	Lithology	Material Description	Depth (ft)	MC (%)	LL	PL	-200 (%)	DD	Remarks and Other Tests
2 / 3150.0							FILL, Wood debris.							
4 / 3148.0							Poorly-Graded SAND with silt (SP-SM), dry, gray, fine grained. Trace gravel, trace organics, micaceous minerals.	4.0						
6 / 3146.0														
8 / 3144.0														
10 / 3142.0							Poorly-Graded GRAVEL with sand (GP), Cobbles, moist, gray, coarse grained, rounded. Cobbles up to 6 inches.	10.0						
								11.0						

Boring Depth: 11.0 ft, *Elevation: 3141.0 ft*

Water Level Observations	During Drilling: **Not Encountered**	Remarks:
After Drilling:	After Drilling:	

(2) MDT LOG OF BORING - MDT_REVISED_2009+(CPT_IMPORT).GDT - 1/19/24 14:23 - C:\USERS\SHARRIS\PIONEER TECHNICAL SERVICES\PIONEER GEOTECH - MISSOULACOMPOST\2023\LOGS\GARDEN CITY COMPOST_TP LOGS 2023.GPJ

201 E Broadway Ste C
Helena, MT 59601
Phone: 406-457-8252
Fax: 442-1158

LOG OF BORING

Boring TP-03

PIONEER TECHNICAL SERVICES, INC.

Project: Garden City Compost	**Rig:** CAT 416D **Hammer:** N/A	**Boring Location** N 991,651.1 ft **Coordinates:** E 833,145.4 ft	**Station:** **Offset:**
Project Number: / **UPN:**	**Boring Diameter:** TP	**System:** MT S.P. (E) **Datum:** NAD83	**Top of Boring Elevation:** 3152 ft
Date Started: 11/8/23 / **Date Finished:** 11/8/23	**Drilling Fluid:** None	**Location Source:** Handheld GPS, Uncorrected	**Elevation Source:** Estimate
Driller: J. Duffin **Logger:** S. Harris	**Abandonment Method:** Backfilled with Cuttings	**Township Range and Section:**	

Depth (ft) / Elev. (ft)	Operation	Sample Type	Recovery (%)	RQD (%)	Blow Count	Lithology	Material Description	Depth (ft)	MC (%)	LL	PL	-200 (%)	DD	Remarks and Other Tests
2 / 3150.0							FILL, Wood debris.							
4 / 3148.0														
6 / 3146.0							Poorly-Graded GRAVEL with sand (GP), Cobbles, moist, gray, coarse grained, rounded. Cobbles up to 8 inches.	6.0 7.0	20					

Boring Depth: 7.0 ft, *Elevation: 3145.0 ft*

Water Level Observations	During Drilling: **Not Encountered**	Remarks:
After Drilling:	After Drilling:	

(2) MDT LOG OF BORING - MDT_REVISED_2009+(CPT_IMPORT).GDT - 1/19/24 14:23 - C:\USERS\SHARRIS\PIONEER TECHNICAL SERVICES\PIONEER GEOTECH - MISSOULACOMPOST\2023\LOGS\GARDEN CITY COMPOST_TP LOGS 2023.GPJ

201 E Broadway Ste C
Helena, MT 59601
Phone: 406-457-8252
Fax: 442-1158

LOG OF BORING

Boring TP-04

PIONEER TECHNICAL SERVICES, INC.

Project: Garden City Compost	**Rig:** CAT 416D **Hammer:** N/A	**Boring Location** N 991,656.0 ft **Coordinates:** E 833,248.4 ft	**Station:** **Offset:**
Project Number: / **UPN:**	**Boring Diameter:** TP	**System:** MT S.P. (E) **Datum:** NAD83	**Top of Boring Elevation:** 3152 ft
Date Started: 11/8/23 / **Date Finished:** 11/8/23	**Drilling Fluid:** None	**Location Source:** Handheld GPS, Uncorrected	**Elevation Source:** Estimate
Driller: J. Duffin **Logger:** S. Harris	**Abandonment Method:** Backfilled with Cuttings	**Township Range and Section:**	

Depth (ft) / Elev. (ft)	Operation	Sample Type	Recovery (%)	RQD (%)	Blow Count	Lithology	Material Description	Depth (ft)	MC (%)	LL	PL	-200 (%)	DD	Remarks and Other Tests
2 / 3150.0							FILL, Wood debris.							
4 / 3148.0							Silty GRAVEL with sand (GM), Cobbles, dry, gray, coarse grained, rounded. Nonplastic fines, cobbles up to 8 inches.	4.0	27	0	0	14		
6 / 3146.0								7.0						

Boring Depth: 7.0 ft, *Elevation: 3145.0 ft*

Water Level Observations	During Drilling: **Not Encountered**	Remarks:
After Drilling:	After Drilling:	

(2) MDT LOG OF BORING - MDT_REVISED_2009+(CPT_IMPORT).GDT - 1/19/24 14:23 - C:\USERS\SHARRIS\PIONEER TECHNICAL SERVICES\PIONEER GEOTECH - MISSOULACOMPOST\2023\LOGS\GARDEN CITY COMPOST_TP LOGS 2023.GPJ

201 E Broadway Ste C
Helena, MT 59601
Phone: 406-457-8252
Fax: 442-1158

LOG OF BORING

Boring TP-05

PIONEER TECHNICAL SERVICES, INC.

Project: Garden City Compost	**Rig:** CAT 416D **Hammer:** N/A	**Boring Location** N 991,596.3 ft **Coordinates:** E 833,397.6 ft	**Station:** **Offset:**
Project Number: / **UPN:**	**Boring Diameter:** TP	**System:** MT S.P. (E) **Datum:** NAD83	**Top of Boring Elevation:** 3153 ft
Date Started: 11/8/23 / **Date Finished:** 11/8/23	**Drilling Fluid:** None	**Location Source:** Handheld GPS, Uncorrected	**Elevation Source:** Estimate
Driller: J. Duffin **Logger:** S. Harris	**Abandonment Method:** Backfilled with Cuttings	**Township Range and Section:**	

Depth (ft) / Elev. (ft)	Operation	Sample Type	Recovery (%)	RQD (%)	Blow Count	Lithology	Material Description	Depth (ft)	MC (%)	LL	PL	-200 (%)	DD	Remarks and Other Tests
2 / 3151.0							FILL, Dimensional lumber scraps.							
4 / 3149.0														
6 / 3147.0														
8 / 3145.0								9.0						Excavator refusal due to lack of visibility in water.

Boring Depth: 9.0 ft, *Elevation: 3144.0 ft*

Water Level Observations	During Drilling: **5.0 ft**	Remarks:
After Drilling:	After Drilling:	

(2) MDT LOG OF BORING - MDT_REVISED_2009+(CPT_IMPORT).GDT - 1/19/24 14:23 - C:\USERS\SHARRIS\PIONEER TECHNICAL SERVICES\PIONEER GEOTECH - MISSOULACOMPOST\2023\LOGS\GARDEN CITY COMPOST_TP LOGS 2023.GPJ

201 E Broadway Ste C
Helena, MT 59601
Phone: 406-457-8252
Fax: 442-1158

LOG OF BORING

Boring TP-06

PIONEER TECHNICAL SERVICES, INC.

Project: Garden City Compost	**Rig:** CAT 416D **Hammer:** N/A	**Boring Location** N 991,571.2 ft **Coordinates:** E 833,326.1 ft	**Station:** **Offset:**
Project Number: / **UPN:**	**Boring Diameter:** TP	**System:** MT S.P. (E) **Datum:** NAD83	**Top of Boring Elevation:** 3153 ft
Date Started: 11/8/23 / **Date Finished:** 11/8/23	**Drilling Fluid:** None	**Location Source:** Handheld GPS, Uncorrected	**Elevation Source:** Estimate
Driller: J. Duffin **Logger:** S. Harris	**Abandonment Method:** Backfilled with Cuttings	**Township Range and Section:**	

Depth (ft) / Elev. (ft)	Operation	Sample Type	Recovery (%)	RQD (%)	Blow Count	Lithology	Material Description	Depth (ft)	MC (%)	LL	PL	-200 (%)	DD	Remarks and Other Tests
2 / 3151.0							FILL, Wood debris.							
4 / 3149.0														
6 / 3147.0														
8 / 3145.0														
10 / 3143.0							Poorly-Graded GRAVEL with sand (GP), Cobbles, moist, gray, coarse grained, rounded. Cobbles up to 12 inches.	9.0 10.0						

Boring Depth: 10.0 ft, *Elevation: 3143.0 ft*

Water Level Observations	During Drilling: **Not Encountered**	Remarks:
After Drilling:	After Drilling:	

(2) MDT LOG OF BORING - MDT_REVISED_2009+(CPT_IMPORT).GDT - 1/19/24 14:23 - C:\USERS\SHARRIS\PIONEER TECHNICAL SERVICES\PIONEER GEOTECH - MISSOULACOMPOST\2023\LOGS\GARDEN CITY COMPOST_TP LOGS 2023.GPJ

Appendix B
Photograph Log

Picture # 1: Excavation Equipment, CAT Backhoe

Picture # 2: TP-01 Excavation

Picture # 3: TP-01 Overview

Picture # 4: TP-02 Overview

Picture # 5: TP-03 Overview

Picture # 6: TP-04 Overview

Picture # 7: TP-04 granular spoils

Picture # 8: TP-05 Overview, flooded

Picture # 9: TP-05 Dimensional lumber spoils

Picture # 10: TP-06 Overview

INTENTIONALLY LEFT BLANK

Appendix C
Laboratory Data

LIQUID AND PLASTIC LIMITS TEST REPORT

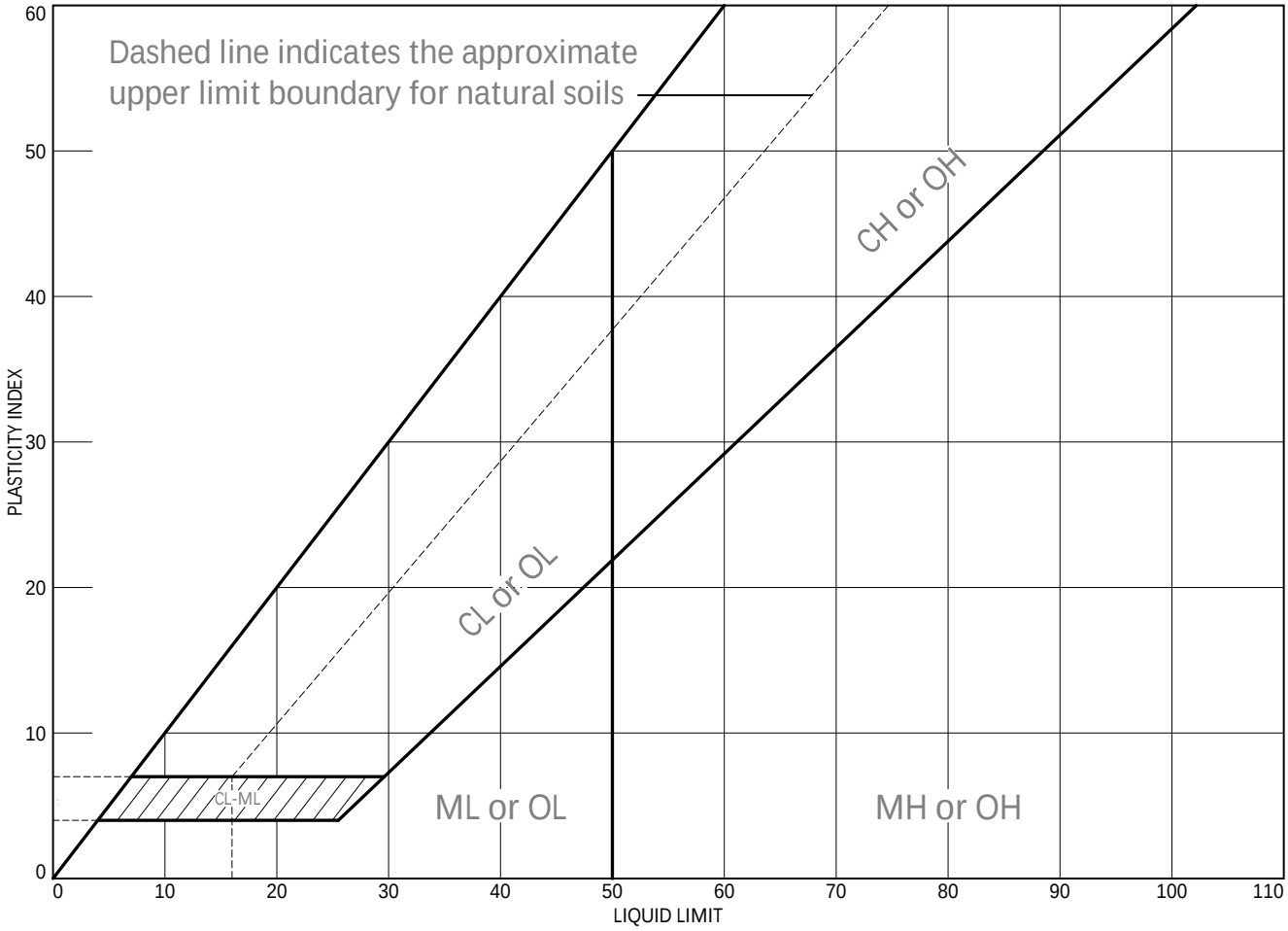

	MATERIAL DESCRIPTION	LL	PL	PI	%<#40	%<#200	USCS
●	silty gravel with sand	NV	NP	NP	34	14	GM

Project No. 2301124 Client: City of Missoula

Project: Garden City Compost

●Location: TP-04 Depth: 4-7' Sample Number: 29664

Remarks:

PIONEER TECHNICAL SERVICES, INC.

Figure

Tested By: DZ

Particle Size Distribution Report

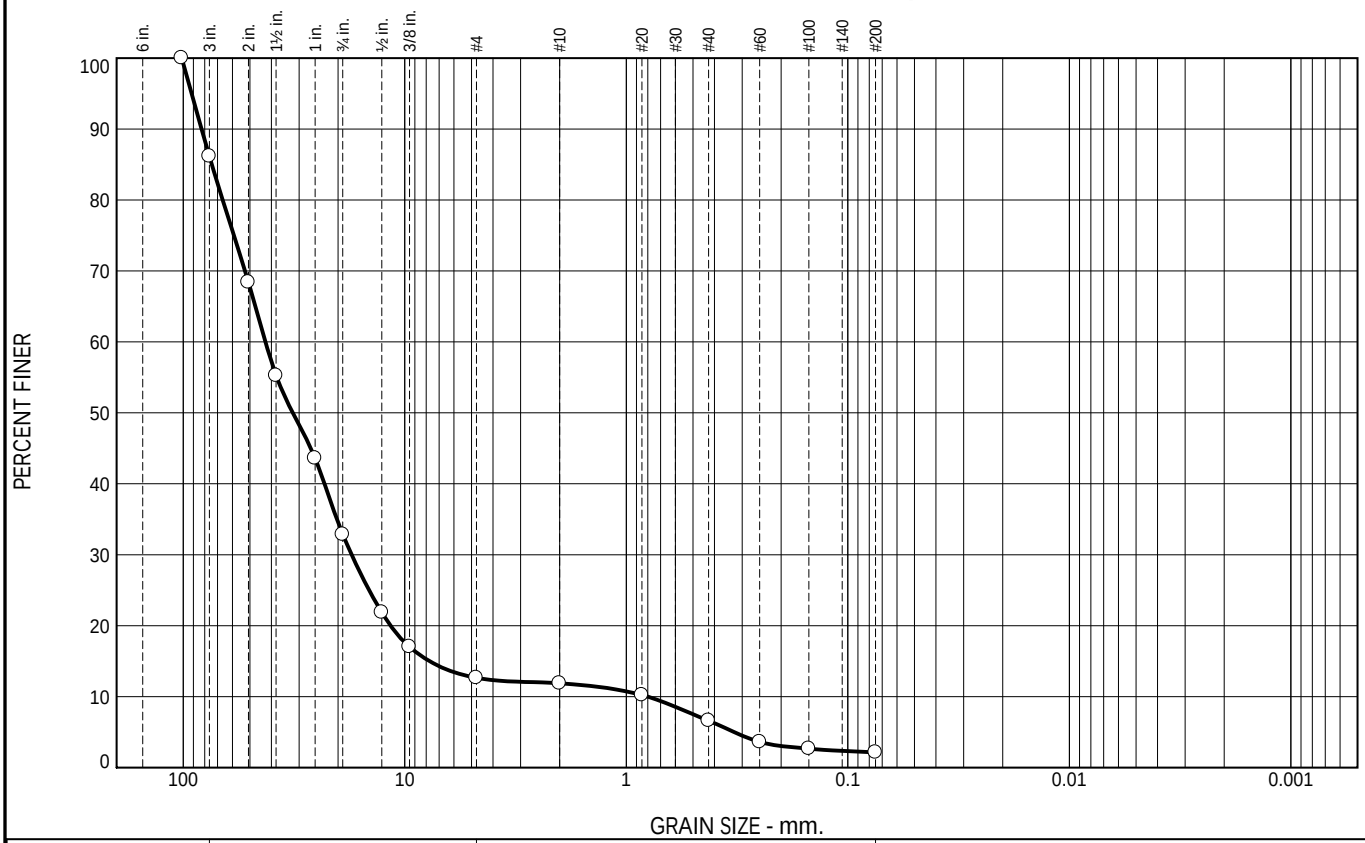

% +3"	% Gravel		% Sand			% Fines	
	Coarse	Fine	Coarse	Medium	Fine	Silt	Clay
14	53	20	1	5	5	2	

SIEVE SIZE OR DIAMETER	PERCENT FINER	SPEC.* PERCENT	PASS? (X=NO)
4"	100		
3"	86		
2"	68		
1.5"	55		
1"	44		
3/4"	33		
1/2"	22		
3/8"	17		
#4	13		
#10	12		
#20	10		
#40	7		
#60	4		
#100	3		
#200	2.1		

* (no specification provided)

Soil Description

poorly-graded gravel with sand

Atterberg Limits

PL= LL= PI=

Coefficients

D_{90}= 82.6824 D_{85}= 74.2815 D_{60}= 42.5709
D_{50}= 32.0621 D_{30}= 17.3734 D_{15}= 7.7292
D_{10}= 0.8010 C_u= 53.15 C_c= 8.85

Classification

USCS= GP AASHTO=

Remarks

F.M.=7.57

Location: TP-01
Sample Number: 29661 Depth: 7-10' Date: 1/12/23

PIONEER TECHNICAL SERVICES, INC.

Client: City of Missoula
Project: Garden City Compost
Project No: 2301124 Figure

Tested By: TP

Particle Size Distribution Report

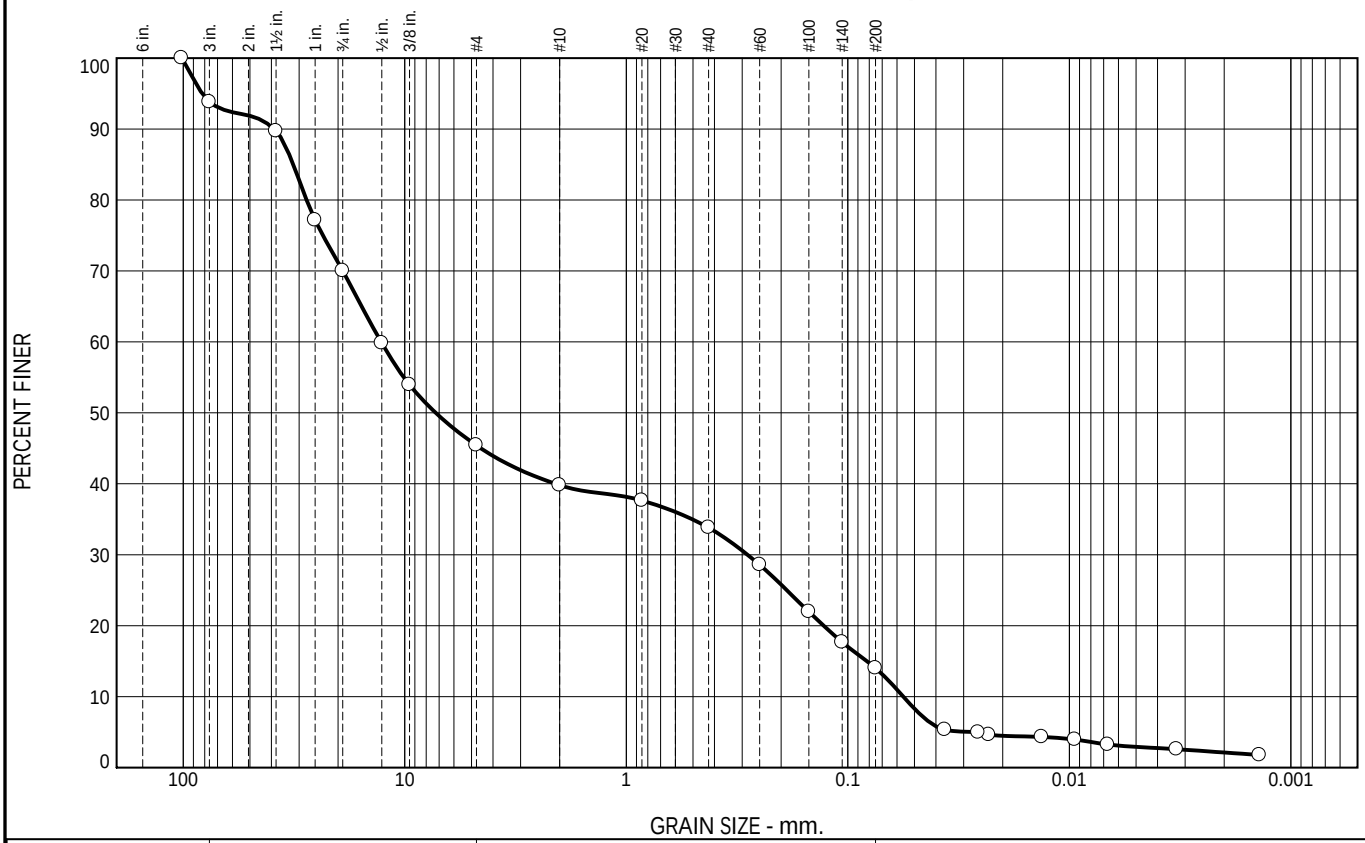

% +3"	% Gravel		% Sand			% Fines	
	Coarse	Fine	Coarse	Medium	Fine	Silt	Clay
6	24	25	5	6	20	11	3

SIEVE SIZE OR DIAMETER	PERCENT FINER	SPEC.* PERCENT	PASS? (X=NO)
4"	100		
3"	94		
1.5"	90		
1"	77		
3/4"	70		
1/2"	60		
3/8"	54		
#4	45		
#10	40		
#20	38		
#40	34		
#60	29		
#100	22		
#140	18		
#200	14		
0.0364 mm.	5.3		
0.0258 mm.	5.0		
0.0231 mm.	4.6		
0.0133 mm.	4.3		
0.0094 mm.	4.0		
0.0067 mm.	3.3		
0.0033 mm.	2.6		
0.0014 mm.	1.8		

* (no specification provided)

Soil Description

silty gravel with sand

Atterberg Limits

PL= NP LL= NV PI= NP

Coefficients

D_{90}= 38.9198 D_{85}= 31.8882 D_{60}= 12.7829
D_{50}= 7.2464 D_{30}= 0.2839 D_{15}= 0.0821
D_{10}= 0.0562 C_u= 227.40 C_c= 0.11

Classification

USCS= GM AASHTO= A-1-b

Remarks

F.M.=4.79

Location: TP-04
Sample Number: 29664 Depth: 4-7' Date: 1/12/23

PIONEER TECHNICAL SERVICES, INC.

Client: City of Missoula
Project: Garden City Compost

Project No: 2301124 Figure

Tested By: DZ

Alpine Analytical Laboratory

1315 Cherry, Helena, MT 59601
(406)449-6282

Client: **Pioneer Technical Services**

Date Reported: 19-Jan-24

Sample ID: TP-02,6-8/TP-03,6-7
Project ID: Garden City Compost (Missoula)

Chain of Custody #: 62

Laboratory ID: 06A191
Sample Matrix: Soil

Date / Time Sampled: None Given
Date / Time Received: 16-Jan-24 @ 14:40

Parameter	Result	PQL	Analyzed Date/Time	Analyzed By	Method Reference
Soluble Sulfate, %	0.0132	0.00005	18-Jan-24 @ 12:07	CE	EPA 300.0
pH, s.u.	6.70	0.01	18-Jan-24 @ 11:55	CE	MT 232-04
Marble pH, s.u.	6.95	0.01	19-Jan-24 @ 11:00	CE	MT 232-04

Comments:

PQL - Practical Quantitation Limit

References:
Methods for Chemical Analysis of Water and Wastes, US EPA, 600/4-79-020
Method of Sampling and Testing MT232-04*, Soil Corrosion Test* (Montana Method).

Reviewed by: CE

Appendix D
Seismic Data

ASCE Hazards Report

Address:
No Address at This Location

Standard: ASCE/SEI 7-22
Risk Category: II
Soil Class: D - Stiff Soil

Latitude: 46.879673
Longitude: -114.04495
Elevation: 3151.9875321070363 ft (NAVD 88)

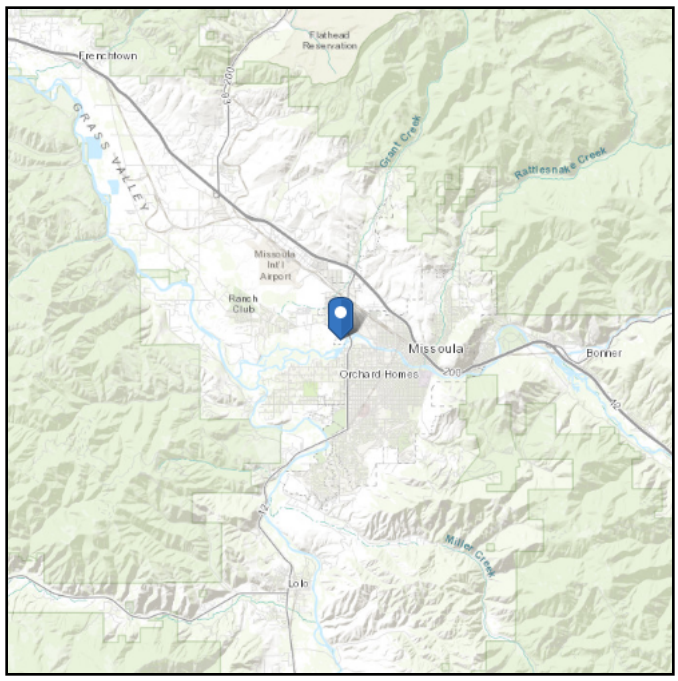

Seismic

Site Soil Class: D - Stiff Soil

Results:

PGA_M :	0.24	T_L :	6
S_{MS} :	0.62	S_S :	0.44
S_{M1} :	0.35	S_1 :	0.13
S_{DS} :	0.41	V_{S30} :	260
S_{D1} :	0.23		

Seismic Design Category: D

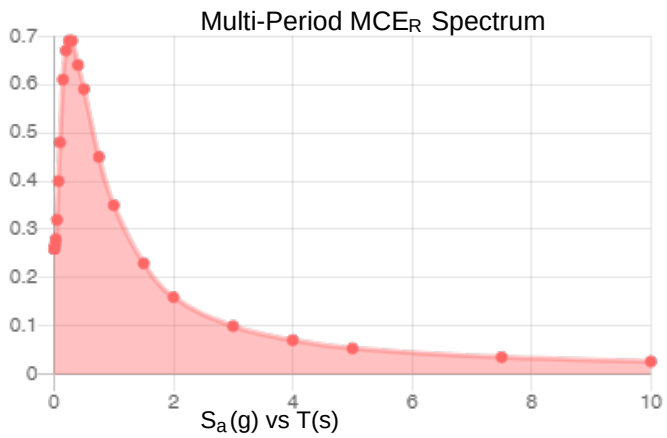

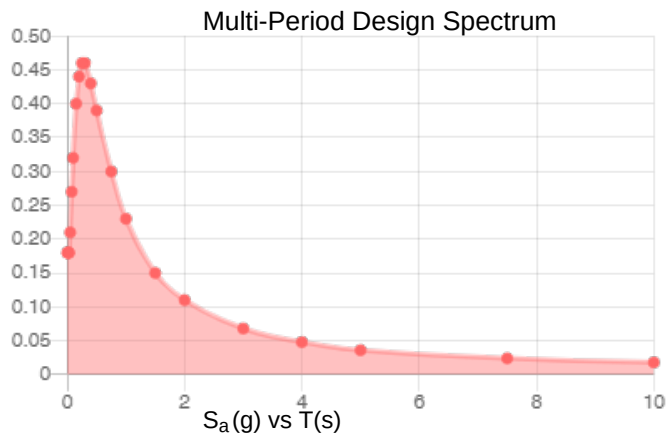

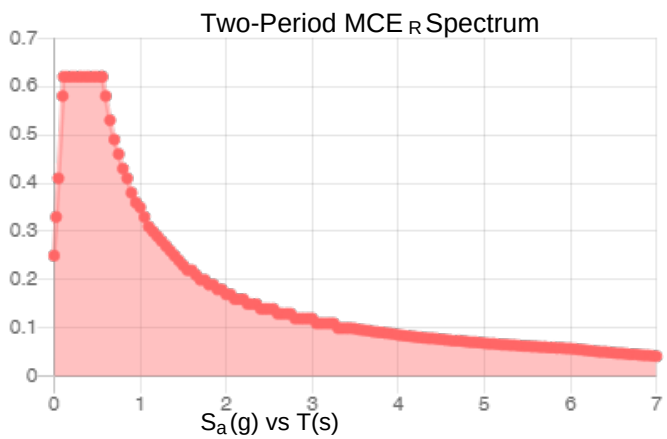

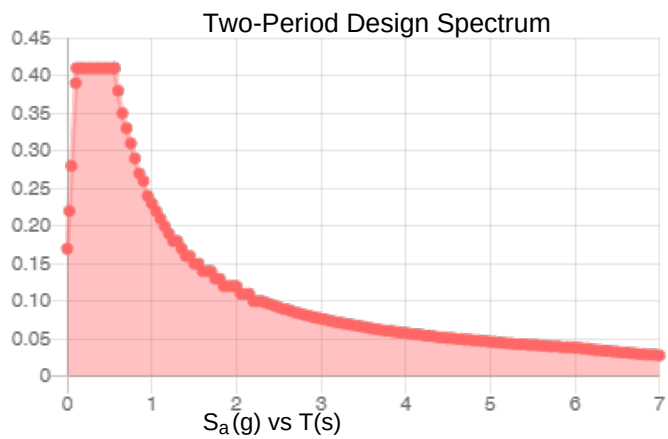

MCE_R Vertical Response Spectrum

Vertical ground motion data has not yet been made available by USGS.

Design Vertical Response Spectrum

Vertical ground motion data has not yet been made available by USGS.

Data Accessed: **Fri Jan 19 2024**

Date Source:
USGS Seismic Design Maps based on ASCE/SEI 7-22 and ASCE/SEI 7-22 Table 1.5-2. Additional data for site-specific ground motion procedures in accordance with ASCE/SEI 7-22 Ch. 21 are available from USGS.

The ASCE Hazard Tool is provided for your convenience, for informational purposes only, and is provided “as is” and without warranties of any kind. The location data included herein has been obtained from information developed, produced, and maintained by third party providers; or has been extrapolated from maps incorporated in the ASCE standard. While ASCE has made every effort to use data obtained from reliable sources or methodologies, ASCE does not make any representations or warranties as to the accuracy, completeness, reliability, currency, or quality of any data provided herein. Any third-party links provided by this Tool should not be construed as an endorsement, affiliation, relationship, or sponsorship of such third-party content by or from ASCE.

ASCE does not intend, nor should anyone interpret, the results provided by this Tool to replace the sound judgment of a competent professional, having knowledge and experience in the appropriate field(s) of practice, nor to substitute for the standard of care required of such professionals in interpreting and applying the contents of this Tool or the ASCE standard.

In using this Tool, you expressly assume all risks associated with your use. Under no circumstances shall ASCE or its officers, directors, employees, members, affiliates, or agents be liable to you or any other person for any direct, indirect, special, incidental, or consequential damages arising from or related to your use of, or reliance on, the Tool or any information obtained therein. To the fullest extent permitted by law, you agree to release and hold harmless ASCE from any and all liability of any nature arising out of or resulting from any use of data provided by the ASCE Hazard Tool.

March 2, 2017

Mr. Paul Montgomery, P.E.
Anderson-Montgomery Consulting Engineers
1064 N. Warren St.
Helena, MT 59601

RE: Missoula Compost Geotechnical Investigations

Dear Mr. Montgomery;

Pioneer Technical Services Inc. (Pioneer) completed two geotechnical investigations at the Missoula Compost facility. The work was performed to provide Anderson-Montgomery Consulting Engineers (Anderson-Montgomery) geotechnical design recommendations for proposed infrastructure improvements.

The initial scope of work was to perform a test pit investigation, log soil lithology, acquire soil samples, perform geotechnical laboratory testing, and provide geotechnical design recommendations. The test pit investigation revealed considerable amounts of compost and fill at the proposed infrastructure locations. Consequently, the geotechnical design component has been suspended temporarily pending removal of compost and fill. Subsequently, Pioneer performed a geoprobe investigation to further define the quantities of compost and collect compost samples for analytical testing.

This letter documents the test pit and geoprobe investigations. An additional letter will be provided at a later date with specific geotechnical recommendations.

SITE DESCRIPTION

Missoula Compost is owned and operated by the City of Missoula. The 32-acre facility is located along the north side of the Clark Fork River, west of North Reserve Street in Missoula, Montana. The City of Missoula Waste Water Treatment Plant abuts the eastern edge of the compost facility. A site survey (Track 1, COS 5208) was performed in 2016 by WGM Group. WGM Group provided Pioneer survey control point and monitoring well elevations which we used to survey test pit and borehole elevations.

Pioneer understands that prior to being used as a composting facility; waste water lagoons were located on the site. The lagoons are thought to have been located on the eastern portion of the site; however, specific lagoon size, location, and quantity are unknown.

TEST PIT INVESTIGATION

Eight test pits (TP-01 through TP-08) were excavated on December 19 and 20, 2016 at locations identified by Anderson-Montgomery. Excavation work was performed by City of Missoula personnel using a CAT 416D backhoe. Pioneer logged the test pit lithology, collected soil samples, and surveyed test pit locations. Table 1 lists the test pit coordinates. A site map

showing the approximate test pit locations is attached as Figure 1. Photographs of the investigation are included in Attachment A.

Soil Lithology

Pioneer collected soils samples from each test pit and field classified them in general accordance with ASTM D2488, "Standard Practice for Description and Identification of Soils (Visual-Manual Procedure)." A brief description of the soils encountered is listed in Table 2. A detailed description of the soils is included in the test pit logs in Attachment B.

Groundwater

Groundwater was not encountered in any of the test pits during excavation on December 19, and 20, 2016. The groundwater table likely fluctuates seasonally and is likely higher in spring months.

Geotechnical Laboratory Testing

The majority of the samples collected for geotechnical testing are being held in Pioneer's lab and will be tested at a later date, pending identification of infrastructure locations.

Limited laboratory testing was conducted for moisture contents throughout the site and soil classification of TP-03 fill. Moisture content values are presented in the Test Pit logs included in Attachment B. The laboratory testing data sheets are included in Attachment C.

GEOPROBE INVESTIGATION

Twenty geoprobe boreholes were drilled February 6 through 8, 2017 at locations identified by Anderson-Montgomery. The boreholes were roughly spaced on a 75-foot grid in the southeastern corner of the compost facility. Some of these locations were field adjusted to accessible locations or to position a borehole in an area cleared by compost facility staff.

Pioneer conducted the geoprobe work using a Geoprobe 66DT drill rig tooled with 3.25-inch outer diameter drill rods. Continuous soil samples were collected throughout the depth of the borehole. The leading drill rod, cutting shoe, and sampler components exposed to the compost were decontaminated at the completion of each borehole. Pioneer logged the borehole lithology, collected soil samples, and surveyed test pit locations.

Borehole locations are shown on the site map included as Figure 1. Table 1 lists the borehole coordinates, compost depths, and bottom of compost elevations. Photographs of the investigation are included in Attachment A.

BH-01 and BH-12 were positioned at inaccessible locations and consequently were not drilled. A second borehole was drilled at each of the TP-07 and TP-08 locations due to debris clogging the sample tube, resulting in inadequate sample recovery. The second borehole at these locations was designated with an 'A' (i.e. TP-07 and TP-07A).

Pioneer used a hand-held portable photoionization detector (PID) to field-screen the samples for volatile organic compounds. The highest recorded measurement was 0.8 parts per million. Measurements for each of the boreholes are listed in the borehole logs in Attachment B.

Soil Lithology

Soils samples were field classified using the visual-manual procedure. A detailed description of the soils is included in the borehole logs in Attachment B. Note: due to drill limitations of only collecting samples 1.5-inches in diameter or less and limited sample recovery, soil under laying the compost could not be readily identified as fill or native soils.

BH-02, BH-07, and BH-07A were positioned on top of an above-grade compost pile which is part of active composting operations. Compost located above grade is described in the borehole logs as 'active compost'. Below grade compost was referenced as 'compost', similar to other boreholes. Active compost was not included in composite samples collected for analytical testing. The zero mark used to delineate active compost from compost was assumed to be the centerline elevation (El. 3154.2) of the access road immediately east of compost pile. The vertical extents of compost for BH-07 and BH-07A were not determined; Pioneer did not mobilize enough drill rods to sample through the above and below grade compost and still reach underlying soils.

Groundwater

Groundwater was encountered in BH-06, BH-8A, BH-13, BH-17, and BH-19 at depths ranging between 14.5 and 17.0 feet. Specific groundwater depths and elevations are listed in Table 1 and the borehole logs.

Analytical Laboratory Testing

A composite compost sample was collected from each borehole and placed in sample containers provided by Energy Labs. Samples collected on February 6 and February 7 were shipped to Energy Labs in Helena via UPS near the end of each day. Pioneer delivered samples collected on February 8 directly to Energy Labs. The chain of custody for each batch of samples is included in Attachment D. Energy Labs is contracted through Anderson-Montgomery; it is presumed analytical results will be provided directly to Anderson-Montgomery.

BASIS OF RECOMMENDATIONS

The data submitted in this letter are based upon information and samples obtained from the test pits and boreholes. Often, variations occur between test pits and boreholes, the nature and extent of which do not become evident until additional exploration or construction is conducted. Pioneer recommends that, during earthmoving operations, a qualified geotechnical engineer be present to evaluate the soils to verify their resemblance to those encountered during the investigation.

Use of Report

This report is for the exclusive use of Anderson-Montgomery, the City of Missoula, and their design team. In the absence of Pioneer's written approval, Pioneer makes no representation and assumes no responsibility to other parties regarding this report. The data may not be appropriate for other structures or purposes.

Level of Care

Services performed by Pioneer Technical Services personnel for this project have been conducted with the level of care and skill ordinarily exercised by members of the profession currently practicing in this area under similar budget and time restraints. No warranty, expressed or implied, is made.

Thank you for the opportunity to work on the Missoula Compost project. Please call with questions or if you would like to discuss.

Sincerely,

PIONEER TECHNICAL SERVICES, INC.

Michael Browne, P.E.
Geotechnical Engineer

Attachments:

A. Photo Log
B. Test Pit and Borehole Log
C. Lab Results
D. Energy Chain of Custody

Table 1: Test Pit and Borehole Coordinates and Elevations

	Coordinates			Compost		Bottom of Hole		Groundwater	
	Northing	Easting	Ground Surface Elevation	Depth (ft)	Bottom Elevation	Depth (ft)	Bottom Elevation	Depth (ft)	Elevation
TP-01	991,766	833,051	3155.71	10.5	3145.2	12.0	3143.7	No GW	
TP-02	992,123	832,958	3150.91	0.0	3150.9	8.4	3142.5	No GW	
TP-03	991,859	833,195	3155.01	5.0	3150.0	10.9	3144.1	No GW	
TP-04	991,754	833,259	3154.99	2.0	3153.0	9.7	3145.3	No GW	
TP-05	991,451	833,241	3155.53	6.0	3149.5	11.0	3144.5	No GW	
TP-06	991,253	833,160	3155.52	12.2	3143.3	12.2	3143.3	15.0	3140.5
TP-07	991,273	832,813	3150.17	11.4	3138.8	11.4	3138.8	No GW	
TP-08	991,794	832,565	3150.20	0.0	3150.2	8.5	3141.7	No GW	
BH-02	991,472	833,078	3161.57	13.8	3147.8	19.7	3141.9	No GW	
BH-03	991,452	833,160	3154.43	7.1	3147.3	9.7	3144.7	No GW	
BH-04	991,472	833,256	3156.49	6.5	3150.0	13.7	3142.8	No GW	
BH-05	991,472	833,329	3154.29	4.0	3150.3	11.8	3142.5	No GW	
BH-06	991,359	832,983	3148.92	14.5	3134.4	16.0	3132.9	No GW	
BH-07	991,365	833,063	3167.18	21.0	3146.2	21.0	3146.2	No GW	
BH-07A	991,368	833,061	3167.1	21.0	3146.1	21.0	3146.1	No GW	
BH-08	991,364	833,163	3152.78	6.5	3146.3	6.5	3146.3	No GW	
BH-08A	991,362	833,167	3152.8	20.0	3132.8	21.0	3131.8	17.0	3135.8
BH-09	991,392	833,252	3156.14	6.0	3150.1	11.8	3144.3	No GW	
BH-10	991,390	833,324	3153.57	10.2	3143.4	11.2	3142.4	No GW	
BH-11	991,316	832,960	3149.85	7.5	3142.4	8.8	3141.1	No GW	
BH-13	991,271	833,134	3151.69	13.5	3138.2	21.0	3130.7	15.7	3136.0
BH-14	991,302	833,203	3153.21	10.8	3142.4	12.5	3140.7	No GW	
BH-15	991,276	833,285	3154.26	4.2	3150.1	11.6	3142.7	No GW	
BH-16	991,233	832,943	3149.51	8.8	3140.7	10.1	3139.4	No GW	
BH-17	991,182	833,039	3150.5	10.3	3140.2	15.5	3135.0	14.5	3136.0
BH-18	991,235	833,106	3152.26	7.8	3144.5	15.5	3136.8	No GW	
BH-19	991,228	833,201	3153.36	5.5	3147.9	20.0	3133.4	15.0	3138.4
BH-20	991,215	833,272	3154.45	0.5	3154.0	8.3	3146.2	No GW	

Note:

1) Test pit (TP) horizontal coordinates from hand-held, consumer-grade Garmin GPS.
2) Borehole (BH) horizontal coordinates from resource-grade Trimble GPS. Coordinates are not corrected.
3) Elevations from level survey relative to control points and monitoring well elevations provided by WGM Group.
4) Horizontal coordinates: Montana State Plane, NAD83.
5) Vertical coordinates: NAVD88.
6) No GW = Groundwater table not encountered during investigation.

Table 2: Test Pit Lithology

Test Pit	Depth (ft)	Lithology
01	0 – 10.5	Compost
	10.5 – 11.0	Sandy Silt (native)
	11.5 – 12.0	Poorly Graded Gravel with Sand (native)
02	0 – 0.7	Topsoil (native)
	0.7 – 4.6	Well-Graded Sand (native)
	4.6 – 5.5	Well-Graded Sand with Gravel (native)
	5.5 – 8.4	Well-Graded Gravel with Sand (native)
03	0 – 5.0	Compost
	5.0 – 10.9	Well-Graded Gravel with Silt and Sand (fill)
04	0 – 2.0	Compost
	2.0 – 4.5	Poorly Graded Gravel with Sand (fill)
	4.5 – 7.5	Poorly Graded Sand with Gravel (fill)
	7.5 – 9.7	Poorly Graded Gravel with Sand (fill)
05	0 – 6.0	Compost
	6.0 – 10.0	Poorly Graded Gravel with Sand (fill)
	10.0 – 11.0	Well-Graded Gravel with Sand (native)
06	0 – 2.8	Compost
	2.8 – 7.5	Poorly Graded Gravel with Sand (fill)
	7.5 – 12.2	Wood Debris/sawdust (fill)
07	0 – 11.4	Compost
08	0 – 1.1	Clayey Gravel (road base course)
	1.1 – 4.4	Silt (native)
	4.4 – 5.0	Well-Graded Sand (native)
	5.0 – 8.5	Well-Graded Gravel with Sand (native)

LEGEND-EXISTING

- SUBJECT PROPERTY BOUNDARY
- LOT LINE
- EXTERIOR BUILDING WALL
- CONCRETE
- ASPHALT
- EDGE OF ASPHALT
- CURB AND GUTTER
- CURB AND GUTTER W/DRIVEWAY OPENING
- W — WATER MAIN
- S — SANITARY SEWER MAIN
- AP — AERIAL POWER LINE
- BE — BURIED ELECTRIC LINE
- T — BURIED TELEPHONE LINE
- G — GAS MAIN
- X — FENCE
- CONTOUR (1 FOOT INTERVAL)
- W/V — WATER VALVE
- FIRE HYDRANT
- MONITORING WELL
- SANITARY SEWER MANHOLE
- SANITARY SEWER CLEANOUT
- DRAINAGE SUMP
- UTILITY POLE
- GUY WIRE
- EM — ELECTRIC METER
- PB — PULL BOX
- TEL — TELEPHONE PEDESTAL
- GM — GAS METER
- EVERGREEN TREE (SIZE AS NOTED)
- DECIDUOUS TREE (SIZE AS NOTED)
- SIGN
- CONTROL POINT
- TP-01 — PIONEER TEST PIT
- 1 — PIONEER BOREHOLE

SURVEY CONTROL

Number	Northing	Easting	Elevation	Description
1	992216.26	833418.70	3153.37	WGM RED PLASTIC CAP
2	992153.74	832630.18	3149.34	WGM RED PLASTIC CAP
3	991068.05	832028.80	3148.63	WGM RED PLASTIC CAP
4	990963.34	833402.46	3157.39	WGM RED PLASTIC CAP
5	991921.50	833488.52	3152.23	WGM ORANGE PLASTIC CAP
6	991756.90	833623.31	3155.01	MAG NAIL
100	991903.57	833386.30	3155.42	HUB MAG NAIL
101	991456.96	833446.46	3157.14	MAG NAIL

BASIS OF BEARINGS:
GRID NORTH OF MONTANA STATE PLANE COORDINATE SYSTEM
NAD83(2011)(EPOCH:2010.000) @ GROUND

VERTICAL DATUM:
NORTH AMERICAN VERTICAL DATUM OF 1988

DRAFT
NOT FOR CONSTRUCTION

N

DISPLAYED AS:
COORD SYS/ZONE: MSP
DATUM: NAD 83
UNITS: FEET
SOURCE: ----

SCALE IN FEET
0 50 100

FIGURE 1 SITE MAP

PIONEER TECHNICAL SERVICES, INC.
201 E. BROADWAY, SUITE C
HELENA, MT 59601
(406) 457-8252

DATE: 02-22-17

3/1/2017 5:52:06 PM M:\DATA-GEOTECH\ANDERSON-MONTGOMERY\MISSOULA_COMPOST-2016\4.0_DRAWINGS\SITE MAP-PLN-001-17.DWG

Attachment A – Photograph Log

Picture #: 1	Description: TP-01.

Picture #: 2	Description: TP-01; soil profile.

Picture #: 3	Description: TP-01; spoils pile.

Picture #: 4	Description: TP-01; 11 ft sample depth.

Picture #: 5	Description: TP-02.

Picture #: 6	Description: TP-02; soil profile.

Picture #: 7	Description: TP-02; spoils pile.

Picture #: 8	Description: TP-02; 3 ft sample depth.

Picture #: 9	Description: TP-02; 5 ft sample depth.

Picture #: 10	Description: TP-03.

Picture #: 11	Description: TP-03; soil profile.

Picture #: 12	Description: TP-03; spoils pile.

Picture #: 13	Description: TP-03; 5 ft sample depth.

Picture #: 14	Description: TP-03; 7 ft sample depth.

Picture #: 15	Description: TP-03; 10.7 ft sample depth.

Picture #: 16	Description: TP-04.

Picture #: 17	Description: TP-04; soil profile.

Picture #: 18	Description: TP-04; spoils pile.

Picture #: 19	Description: TP-04; 3 ft sample depth.

Picture #: 20	Description: TP-04; 9 ft sample depth.

Picture #: 21	Description: TP-05.

Picture #: 22	Description: TP-05; soil profile.

Picture #: 23	Description: TP-05; spoils pile.

Picture #: 24	Description: TP-05; 11 ft sample depth.

Picture #: 25	Description: TP-06.

Picture #: 26	Description: TP-06; soil profile.

Picture #: 27	Description: TP-06; spoils pile.

Picture #: 28	Description: TP-06; 5 ft sample depth.

Picture #: 29	Description: TP-06; 7.5 ft sample depth.

Picture #: 30	Description: TP-07.

Picture #: 31	Description: TP-07; soil profile.

Picture #: 32	Description: TP-07; spoils profile.

Picture #: 33	Description: TP-07; 11 ft sample depth.

Picture #: 34	Description: TP-08.

Picture #: 35	Description: TP-08; soil profile.

Picture #: 36	Description: TP-08; spoils profile.

Picture #: 37	Description: TP-08 0-1.1 ft sample depth.

Picture #: 38	Description: TP-08; 3 ft sample depth.

Picture #: 39	Description: TP-08; 4.6 ft sample depth.

Picture #: 40	Description: TP-08; 6 ft sample depth.

Picture #: 41	Description: TP-08; 8 ft sample depth.

Picture # 1: BH-02.

Picture # 2: BH-02; 8-12 ft sample depth.

Picture # 3: BH-02; 12-16 ft sample depth.

Picture # 4: BH-02; 16-19.7 ft sample depth.

Picture # 5: BH-03.

Picture # 6: BH-03; 0-4 ft sample depth.

Picture # 7: BH-03; 4-8 ft sample depth.	Picture # 8: BH-03; 8-9.7 ft sample depth.
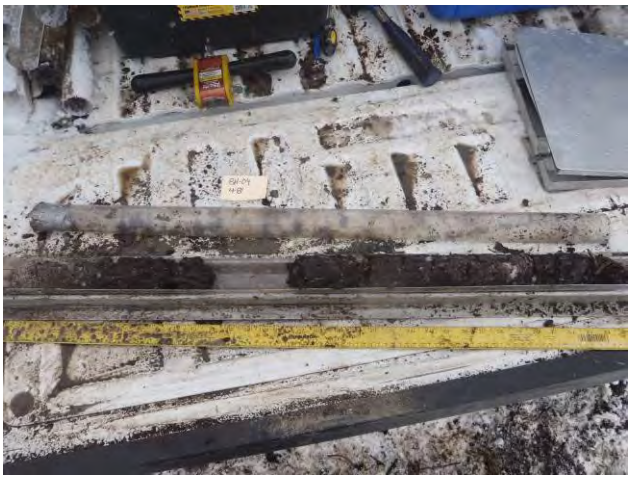	
Picture # 9: BH-04; 4-8 ft sample depth.	Picture # 10: BH-04; 8-12 ft sample depth.
Picture # 11: BH-04; 12-13.7 ft sample depth.	Picture # 12: BH-05.

Picture # 13: BH-05; 0-4 ft sample depth.

Picture # 14: BH-05; 4-8 ft sample depth.

Picture # 15: BH-05; 8-11.8 ft sample depth.

Picture # 16: BH-06.

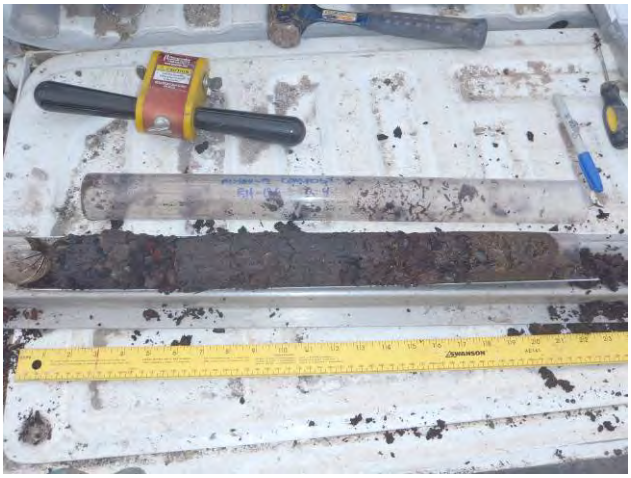

Picture # 17: BH-06; 0-4 ft sample depth.

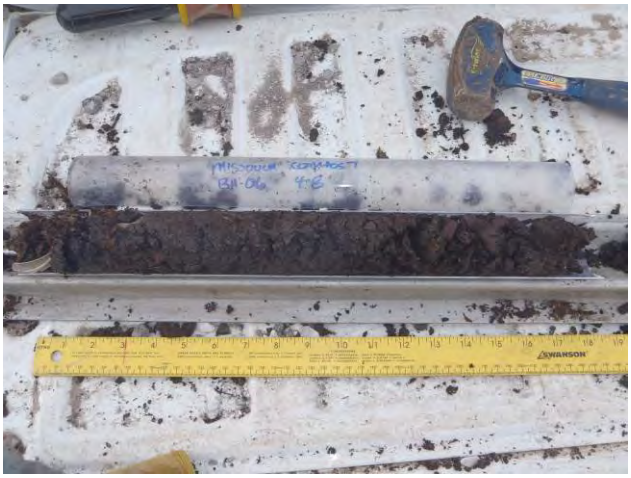

Picture # 18: BH-06; 4-8 ft sample depth.

Picture # 19: BH-06; 8-12 ft sample depth.	Picture # 20: BH-06; 12-16 ft sample depth.
Picture # 21: BH-06A.	Picture # 22: BH-06A; 0-4 ft sample depth.
Picture # 23: BH-07.	Picture # 24: BH-07.

Picture # 25: BH-08.	Picture # 26: BH-08; 0-4 ft sample depth.
Picture # 27: BH-08; 4-6.5 ft sample depth.	Picture # 28: BH-08A.
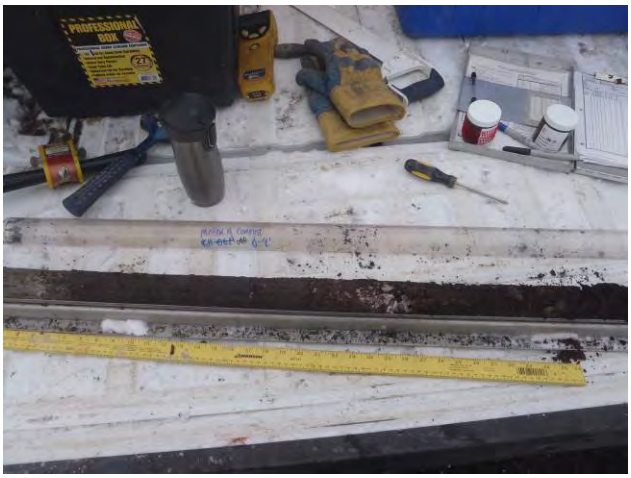	
Picture # 29: BH-08A; 0-4 ft sample depth.	Picture # 30: BH-08A; 4-8 ft sample depth.

Picture # 31: BH-08A; 16-21 ft sample depth.	Picture # 32: BH-09.
Picture # 33: BH-09; 0-4 ft sample depth.	Picture # 34: BH-09; 4-8 ft sample depth.
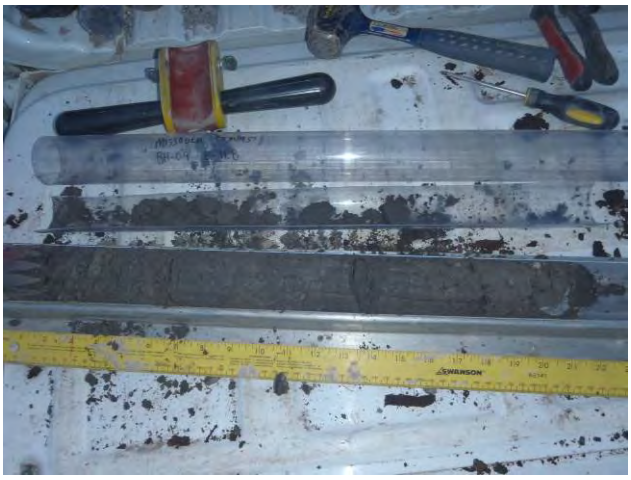	
Picture # 35: BH-09; 8-11.8 ft sample depth.	Picture # 36: BH-10.

Picture # 37: BH-10; 0-4 ft sample depth.

Picture # 38: BH-10; 4-8 ft sample depth.

Picture # 39: BH-10; 8-11.2 ft sample depth.

Picture # 40: BH-11.

Picture # 41: BH-11; 0-4 ft sample depth.

Picture # 42: BH-11; 4-8 ft sample depth.

	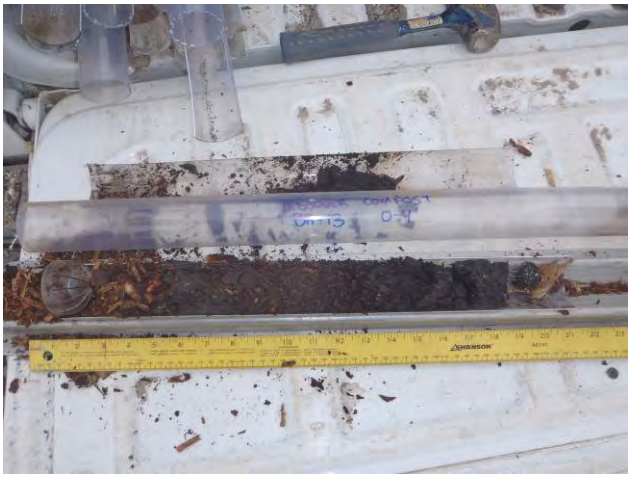
Picture # 43: BH-13.	Picture # 44: BH-13; 0-4 ft sample depth.
Picture # 45: BH-13; 4-8 ft sample depth.	Picture # 46: BH-13; 8-12 ft sample depth.
Picture # 47: BH-13; 16-21 ft sample depth.	Picture # 48: BH-14.

	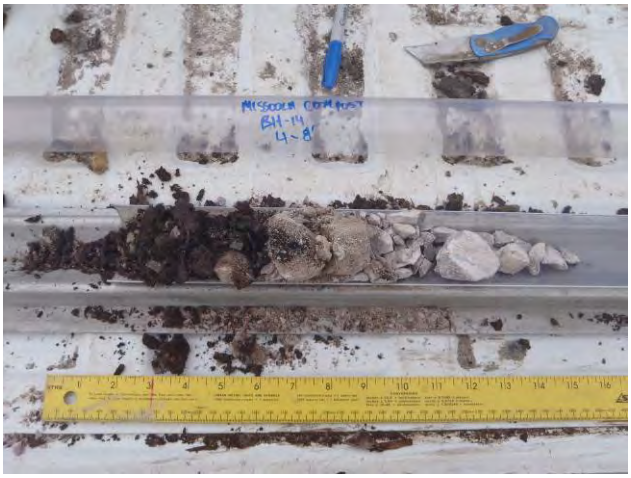
Picture # 49: BH-14; 0-4 ft sample depth.	Picture # 50: BH-14; 4-8 ft sample depth.
Picture # 51: BH-15.	Picture # 52: BH-15; 0-3.5 ft sample depth.
Picture # 53: BH-15; 3.5-7.5 ft sample depth.	Picture # 54: BH-15; 7.5-11.6 ft sample depth.

Picture # 55: BH-16.

Picture # 56: BH-16; 0-4 ft sample depth.

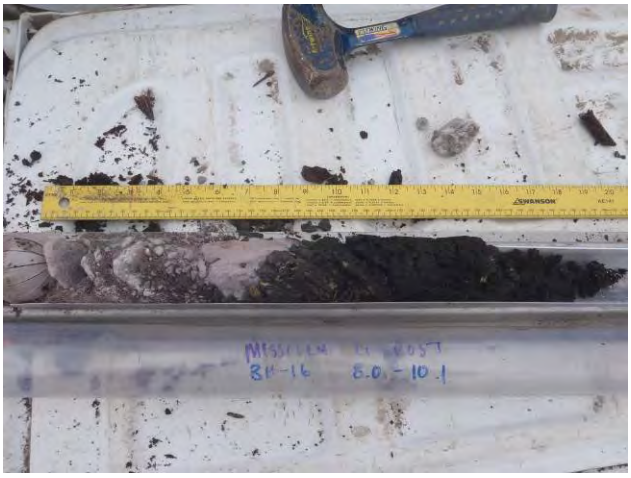

Picture # 57: BH-16; 8-10.1 ft sample depth.

Picture # 58: BH-17.

Picture # 59: BH-17; 0-4 ft sample depth.

Picture # 60: BH-17; 4-8 ft sample depth.

Picture # 61: BH-17; 8-12 ft sample depth.	Picture # 62: BH-07; 12-15.5 ft sample depth.
Picture # 63: BH-18.	Picture # 64: BH-18; 0-4 ft sample depth.
Picture # 65: BH-18; 4-8 ft sample depth.	Picture # 66: BH-18; 8-12 ft sample depth.

Picture # 67: BH-18; 12-15.5 ft sample depth.	Picture # 68: BH-19; 0-4 ft sample depth.
Picture # 69: BH-19; 8-12 ft sample depth.	Picture # 70: BH-20.
Picture # 71: BH-20; 4-8 ft sample depth.	

Attachment B – Test Pit and Borehole Logs

GENERAL NOTES

DRILLING & SAMPLING SYMBOLS:

SS:	Split Spoon - 1-3/8" I.D., 2" O.D., unless otherwise noted	CA:	Casing Advancer
ST:	Thin-Walled Tube - 2" O.D., unless otherwise noted	DA:	Drill Auger
CB:	California Sampler - 2" I.D., 2.5" O.D., unless otherwise noted	HA:	Hand Auger
DB:	Diamond Bit Coring - 4", NX, unless otherwise noted	RB:	Rock Bit
BS:	Bulk Sample or Auger Sample	GS:	Grab Sample

The number of blows required to advance a standard 2-inch O.D. split-spoon sampler (SS) the last 12 inches of the total 18-inch penetration with a 140-pound hammer falling 30 inches is considered the "Standard Penetration" or "N-value". The field blow counts are reported for each 6-inch interval, or portion thereof if greater than 50 blows are required to advance the full 6-inch interval. For over-sized split spoon samplers, non-standard hammers, or non-standard drop heights, the field penetration values are reported on the bore log. The values must be corrected to obtain the N-value.

WL:	Water Level	WS:	While Sampling	NE:	Not Encountered
WCl:	Wet Cave in	WD:	While Drilling		
DCI:	Dry Cave in	BCR:	Before Casing Removal		
AB:	After Boring	ACR:	After Casing Removal		

Water levels indicated on the boring logs are the levels measured in the borings at the times indicated. Groundwater levels at other times and other locations across the site could vary. In pervious soils, the indicated levels may reflect the location of groundwater. In low permeability soils, the accurate determination of groundwater levels may not be possible with only short-term observations.

DESCRIPTIVE SOIL CLASSIFICATION: Soil classification is based on the Unified Soil Classification System, Coarse Grained Soils have more than 50% of their dry weight retained on a #200 sieve; their principal descriptors are: gravel or sand. Cobbles and boulders are not part of the USCS system but are included, when present, as percentages. Fine Grained Soils have less than 50% of their dry weight retained on a #200 sieve; depending on their plasticity, they are described as clays or silts. Major constituents may be added as modifiers and minor constituents may be added according to the relative proportions based on grain size. In addition to gradation, coarse-grained soils are defined on the basis of their in-place relative density and fine-grained soils on the basis of their consistency.

CONSISTENCY OF FINE-GRAINED SOILS

Unconfined Compressive Strength, Qu, psf	Standard Penetration or N-value (SS) Blows/Ft.	Consistency
< 500	< 2	Very Soft
500 - 1,000	2 - 4	Soft
1,001 - 2,000	5 - 8	Medium Stiff
2,001 - 4,000	9 - 15	Stiff
4,001 - 8,000	16 - 30	Very Stiff
8,000 +	30 +	Hard

RELATIVE DENSITY OF COARSE-GRAINED SOILS

Standard Penetration or N-value (SS) Blows/Ft.	California Barrel (CB) Blows/Ft.	Relative Density
0 - 4	0 - 6	Very Loose
5 - 10	7 - 18	Loose
11 - 30	19 - 58	Medium Dense
31 - 50	59 - 98	Dense
50 +	99 +	Very Dense

RELATIVE PROPORTIONS OF SAND AND GRAVEL

Descriptive Term(s) of other constituents	Percent of Dry Weight
Trace	< 15
With	15 - 29
Modifier	> 30

USCS* GRAIN SIZE TERMINOLOGY

Major Component of Sample	Particle Size
Boulders	Over 12 in. (300mm)
Cobbles	12 in. to 3 in. (300mm to 75 mm)
Gravel	3 in. to #4 sieve (75mm to 4.75 mm)
Sand	#4 to #200 sieve (4.75mm to 0.075mm)
Silt or Clay	Passing #200 Sieve (0.075mm)

*For AASHTO grain size the #4 sieve is replaced with the #10 sieve

RELATIVE PROPORTIONS OF FINES

Descriptive Term(s) of other constituents	Percent of Dry Weight
Trace	< 5
With	5 - 12
Modifiers	> 12

PLASTICITY DESCRIPTION

Term	Plasticity Index
Non-Plastic	0
Slightly	1 - 5
Low	6 - 10
Medium	11 - 20
High	21 - 40
Very Highly	> 40

PIONEER TECHNICAL SERVICES, INC.

UNIFIED SOIL CLASSIFICATION SYSTEM

Criteria for Assigning Group Symbols and Group Names Using Laboratory Tests [A]					Soil Classification	
					Group Symbol	Group Name [B]
Coarse Grained Soils More than 50% retained on No. 200 sieve	Gravels More than 50% of coarse fraction retained on No. 4 sieve	Clean Gravels Less than 5% fines	Cu ≥ 4 and 1≤ Cc ≤ 3		GW	Well-graded Gravel [F]
			Cu < and/or 1 > Cc > 3		GP	Poorly graded gravel [F]
		Gravels with Fines More than 12% fines	Fines classify as ML or MH		GM	Silty Gravel [F,G,H]
			Fines classify as CL or CH		GC	Clayey Gravel [F,G,H]
	Sands 50% or more of coarse fraction passes No. 4 sieve	Clean Sands Less than 5% fines	Cu ≥ 6 and 1 ≤ Cc ≤ 3		SW	Well-graded Sand [I]
			Cu < 6 and/or 1 > Cc > 3		SP	Poorly graded Sand [I]
		Sands with Fines More than 12% fines	Fines classify as ML or MH		SM	Silty Sand [G,H,I]
			Fines classify as CL or CH		SC	Clayey Sand [G,H,I]
Fine-Grained Soils 50% or more passes the No. 200 sieve	Silts and Clays Liquid limit less than 50	inorganic	PI > 7 and plots on or above "A" line		CL	Lean Clay [K,L,M]
			PI < 4 or plots below "A" line		ML	Silt [K,L,M]
		organic	Liquid limit - oven dried	< 0.75	OL	Organic Clay [K,L,M,N]
			Liquid limit - not dried			Organic Silt [K,L,M,Q]
	Silts and Clays Liquid Limit 50 or more	inorganic	PI plots on or above "A" Line		CH	Fat Clay [K,L,M]
			PI plots below "A" line		MH	Elastic Silt [K,L,M]
		organic	Liquid limit - oven dried	< 0.75	OH	Organic Clay [K,L,M,P]
			Liquid limit - not dried			Organic Silt [K,L,M,Q]
Highly organic soils	Primarily organic matter, dark in color, and organic odor				PT	Peat

[A] Based on the material passing the 3-in. (75-mm) sieve

[B] If field sample contained cobbles or boulders, or both, add "with cobbles or boulders, or both" to group name.

[C] Gravels with 5 to 12% fines require dual symbols: GW-GM well-graded gravel with silt, GW-GC well-graded gravel with clay, GP-GM poorly graded gravel with silt. GP-GC poorly graded gravel with clay.

[D] Sands with 5 to 12% fines require dual symbols: SW-SM well-graded sand with silt, SW-SC well-graded sand with clay, SP-SM poorly graded sand with silt, SP-SC poorly graded sand with clay.

[E] $Cu = D_{60} / D_{10} \quad Cc = \dfrac{(D_{30})^2}{D_{10} \times D_{60}}$

[F] If soil contains ≥ 15% sand, add "with sand" to group name.

[G] If fines classify as CL-ML, use dual symbol GC-GM, or SC-SM.

[H] If fines are organic, add "with organic fines" to group name.

[I] If soil contains ≥ 15% gravel, add "with gravel" to group name.

[J] If Atterberg limits plot in shaded area, soil is a CL-ML, silty clay.

[K] If soil contains 15 to 29% plus No. 200, add "with sand" or " with gravel," whichever is predominant.

[L] If soil contains ≥ 30% plus No. 200, predominantly sand, add "sandy" to group name.

[M] If soil contains ≥ 30% plus No. 200, predominantly gravel, add "gravelly" to group name.

[N] PI ≥ 4 and plots on or above "A" line.

[O] PI < 4 or plots below "A" line.

[P] PI plots on or above "A" line.

[Q] PI plots below "A" line.

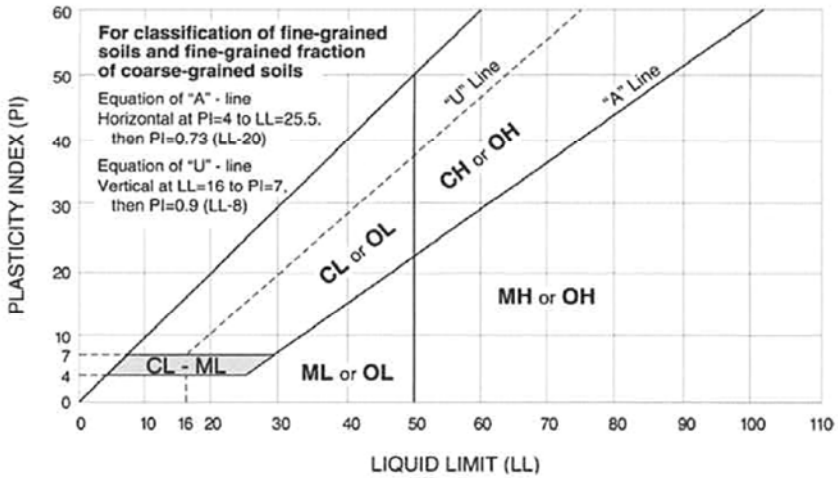

PIONEER TECHNICAL SERVICES, INC.

201 E Broadway STE C
Helena, MT 59602
Phone: 406-457-8252
Fax: 406-442-1158

TEST PIT LOG

PIONEER TECHNICAL SERVICES, INC.

Project Name: Missoula Compost		Project Number:	
Borehole Location: N991,766 E833,051		Borehole Number: TP-01	Sheet 1 of 1
Drilling Equipment: CAT 416D Backhoe	Hammer Type:	Driller: City of Missoula	Logger: Browne
Drilling Fluid: na	Borehole Diameter (in): na	Date Started: 12/19/2016	Date Finished: 12/19/2016

Elevation and Datum: Ground: 3155.71 Casing:

Notes: Horizontal coordinates from consumer grade GPS NAVD88 Vertical Datum

DEPTH (feet)	DRILL: OPERATION	DRILL: RESISTANCE*	DRILL: RATE (fph)	CORE PERCENT RECOVERY	ROCK QUALITY DESIGNATION (RQD)	SAMPLE	RECOVERY (%)	Photoionization Detector (PID) PPM	DRY DENSITY (pcf)	MOISTURE CONTENT (%)	LIQUID LIMIT LL	PLASTIC LIMIT PL	GRAPHIC LOG	MATERIAL DESCRIPTION	DEPTH (feet)	REMARKS
2														COMPOST, wood chips and fiber, frequent wood debris; moist; black.		
4																
6																
8															8.5	
10														FILL, Poorly Graded GRAVEL with Clay and Sand (GP-GC), frequent Cobbles, occasional pockets Compost; rounded; moist; dark gray; no reaction to 10% HCl; fines have low plasticity.	9.5	
										45				COMPOST, wood chips and fiber with frequent wood debris; moist; black.	10.5	Test pit terminated at 12.0' depth: maximum backhoe reach coupled with caving sidewalls.
														Sandy SILT (ML) with Organics (roots); trace Mica flakes; moist; dark gray; no reaction to 10% HCl solution; non-plastic.	11.0	
12										3				Poorly Graded GRAVEL with Sand (GP), frequent cobbles; rounded; moist; brownish gray. Maximum particle size = 9"	12.0	

Bottom of hole at 12.0' (EL. 3143.7)

Operation Types: Auger; Casing Advancer; Core Barrel; Drive Casing

Sampler Types: Split Spoon; Shelby; Bulk Sample; Grab Sample; Penetrometer; Vane Shear; Special Samplers; Testpit

WATER LEVEL OBSERVATIONS

While Drilling ▽ ____ ft Upon Completion of Drilling ▼ ____ ft

Time After Drilling ____ ____ ____ ____

Depth To Water (feet) ____ ____ ____ ____ ▼

Remarks: Groundwater table not encountered

201 E Broadway STE C
Helena, MT 59602
Phone: 406-457-8252
Fax: 406-442-1158

TEST PIT LOG

PIONEER TECHNICAL SERVICES, INC.

Project Name: Missoula Compost		Project Number:	
Borehole Location: N991,123 E832,958		Borehole Number: TP-02	Sheet 1 of 1
Drilling Equipment: CAT 416D Backhoe	Hammer Type:	Driller: City of Missoula	Logger: Browne
Drilling Fluid: na	Borehole Diameter (in): na	Date Started: 12/19/2016	Date Finished: 12/19/2016

Elevation and Datum: Ground: 3150.91 Casing:

Notes: Horizontal coordinates from consumer grade GPS NAVD88 Vertical Datum

DEPTH (feet)	DRILL: OPERATION	DRILL: RESISTANCE*	DRILL: RATE (fph)	CORE PERCENT RECOVERY	ROCK QUALITY DESIGNATION (RQD)	SAMPLE	RECOVERY (%)	Photoionization Detector (PID) PPM	DRY DENSITY (pcf)	MOISTURE CONTENT (%)	LIQUID LIMIT LL	PLASTIC LIMIT PL	GRAPHIC LOG	MATERIAL DESCRIPTION	DEPTH (feet)	REMARKS
														TOPSOIL, Silty SAND (SM) with Organics; frozen; dark brown; no reaction to 10% HCl solution; low plasticity.	0.7	
2														Well-Graded SAND (SW); fine grain; moist; brown to light brown; no reaction to 10% HCl solution.		
										3						
4															4.6	
														Well-Graded SAND with Gravel (SW); occasional Cobbles; medium grain; moist; brown; no reaction to 10% HCl solution. Gravel particles are rounded.	5.5	
6														Well-Graded GRAVEL with Sand (GW); frequent Cobbles; rounded to subrounded; moist; brown; no reaction to 10% HCl solution. Maximum particle size = 10" Visual estimate (~20% Cobbles, ~40% Gravel, ~40% Sand)		
8										2					8.4	

Bottom of hole at 8.4' (EL. 3142.5)

Operation Types: Auger; Casing Advancer; Core Barrel; Drive Casing

Sampler Types: Split Spoon; Shelby; Bulk Sample; Grab Sample; Penetrometer; Vane Shear; Special Samplers; Testpit

WATER LEVEL OBSERVATIONS

While Drilling ____ ft Upon Completion of Drilling ____ ft

Time After Drilling ____ ____ ____ ____

Depth To Water (feet) ____ ____ ____ ____

Remarks: Groundwater table not encountered

201 E Broadway STE C
Helena, MT 59602
Phone: 406-457-8252
Fax: 406-442-1158

TEST PIT LOG

PIONEER TECHNICAL SERVICES, INC.

Project Name: Missoula Compost		Project Number:	
Borehole Location: N991,859 E833,195		Borehole Number: TP-03	Sheet 1 of 1
Drilling Equipment: CAT 416D Backhoe	Hammer Type:	Driller: City of Missoula	Logger: Browne
Drilling Fluid: na	Borehole Diameter (in): na	Date Started: 12/19/2016	Date Finished: 12/19/2016

Elevation and Datum: Ground: 3155.01 Casing:

Notes: Horizontal coordinates from consumer grade GPS NAVD88 Vertical Datum

DEPTH (feet)	DRILL: OPERATION	DRILL: RESISTANCE*	DRILL: RATE (fph)	CORE PERCENT RECOVERY	ROCK QUALITY DESIGNATION (RQD)	SAMPLE	RECOVERY (%)	Photoionization Detector (PID) PPM	DRY DENSITY (pcf)	MOISTURE CONTENT (%)	LIQUID LIMIT LL	PLASTIC LIMIT PL	GRAPHIC LOG	MATERIAL DESCRIPTION	DEPTH (feet)	REMARKS
2, 4														COMPOST, wood chips and fiber, frequent wood debris; moist; black.	5.0	Ground surface 'pumped' as backhoe drove across.
6										3				FILL, Well-Graded GRAVEL with Silt and Sand (GW-GM), frequent Cobbles, occasional wood debris and pockets compost; subrounded; moist; dark gray; no reaction to 10% HCl; fines have low plasticity.		
8										7				Maximum particle size = 12" Visual estimate (~10% Cobbles, ~40% Gravel, ~30% Sand, ~20 Fines)		
10											34	26		Log observed protruding from test pit sidewall at 8.5' depth. 12" Ø stump excavated from test pit at 9' depth.	10.9	Test pit terminated at 10.9' depth: sidewalls continually caving in near bottom of test pit.

Bottom of hole at 10.9' (EL. 3144.1)

Operation Types: Auger; Casing Advancer; Core Barrel; Drive Casing

Sampler Types: Split Spoon; Shelby; Bulk Sample; Grab Sample; Penetrometer; Vane Shear; Special Samplers; Testpit

WATER LEVEL OBSERVATIONS

While Drilling ▽ ft Upon Completion of Drilling ▼ ft
Time After Drilling
Depth To Water (feet)
Remarks: Groundwater table not encountered

201 E Broadway STE C
Helena, MT 59602
Phone: 406-457-8252
Fax: 406-442-1158

TEST PIT LOG

PIONEER TECHNICAL SERVICES, INC.

Project Name: Missoula Compost		Project Number:	
Borehole Location: N991,754 E833,259		Borehole Number: TP-04	Sheet 1 of 1
Drilling Equipment: CAT 416D Backhoe	Hammer Type:	Driller: City of Missoula	Logger: Browne
Drilling Fluid: na	Borehole Diameter (in): na	Date Started: 12/19/2016	Date Finished: 12/19/2016

Elevation and Datum: Ground: 3154.99 Casing:

Notes: Horizontal coordinates from consumer grade GPS NAVD88 Vertical Datum

DEPTH (feet)	DRILL: OPERATION	DRILL: RESISTANCE*	DRILL: RATE (fph)	CORE PERCENT RECOVERY	ROCK QUALITY DESIGNATION (RQD)	SAMPLE	RECOVERY (%)	Photoionization Detector (PID) PPM	DRY DENSITY (pcf)	MOISTURE CONTENT (%)	LIQUID LIMIT LL	PLASTIC LIMIT PL	GRAPHIC LOG	MATERIAL DESCRIPTION	DEPTH (feet)	REMARKS
2														COMPOST, wood chips and fiber, frequent wood debris; moist; black.	2.0	
4										5				FILL, Poorly Graded GRAVEL with Sand (GP); rounded to subrounded; dark gray; moist; no reaction to 10% HCl.	4.5	Flat rock particles randomly oriented entire test pit depth (i.e., some flat particles positioned in a horizontal manner while others positioned in vertical manner).
6														FILL, Poorly Graded SAND with Gravel (SP); frequent Debris (tree limbs, glass bottles); dark gray; moist; no reaction to 10% HCl.	7.5	
8										6				FILL, Poorly Graded GRAVEL with Sand (GP), frequent Cobbles; rounded; dark gray; moist.	9.7	Test pit terminated at 9.7' depth: sidewalls continually caving in near bottom of test pit.

Bottom of hole at 9.7' (EL. 9145.3)

Operation Types: Auger; Casing Advancer; Core Barrel; Drive Casing

Sampler Types: Split Spoon; Shelby; Bulk Sample; Grab Sample; Penetrometer; Vane Shear; Special Samplers; Testpit

WATER LEVEL OBSERVATIONS

While Drilling ▽ ft Upon Completion of Drilling ▼ ft

Time After Drilling

Depth To Water (feet)

Remarks: Groundwater table not encountered

201 E Broadway STE C
Helena, MT 59602
Phone: 406-457-8252
Fax: 406-442-1158

TEST PIT LOG

PIONEER TECHNICAL SERVICES, INC.

Project Name: Missoula Compost		Project Number:	
Borehole Location: N991,451 E833,241		Borehole Number: TP-05	Sheet 1 of 1
Drilling Equipment: CAT 416D Backhoe	Hammer Type:	Driller: City of Missoula	Logger: Browne
Drilling Fluid: na	Borehole Diameter (in): na	Date Started: 12/19/2016	Date Finished: 12/19/2016

Elevation and Datum: Ground: 3155.53 Casing:

Notes: Horizontal coordinates from consumer grade GPS NAVD88 Vertical Datum

DEPTH (feet)	DRILL: OPERATION	DRILL: RESISTANCE*	DRILL: RATE (fph)	CORE PERCENT RECOVERY	ROCK QUALITY DESIGNATION (RQD)	SAMPLE	RECOVERY (%)	Photoionization Detector (PID) PPM	DRY DENSITY (pcf)	MOISTURE CONTENT (%)	LIQUID LIMIT LL	PLASTIC LIMIT PL	GRAPHIC LOG	MATERIAL DESCRIPTION	DEPTH (feet)	REMARKS
2, 4, 6														COMPOST, wood chips and fiber, frequent wood debris; moist; black.	6.0	Flat rock particles in fill layer randomly oriented (i.e., some flat particles positioned in a horizontal manner while others positioned in vertical manner).
8, 10										13, 5				FILL, Poorly Graded GRAVEL with Sand (GP); frequent Cobbles and Debris (wood), occasional Boulders; subrounded; moist; dark gray; no reaction to 10% HCl.	10.0	Test pit terminated at 11.0' depth: maximum backhoe reach coupled with caving sidewalls.
														Well-Graded GRAVEL with Sand (GW); frequent Cobbles; rounded to subrounded; moist; gray; no reaction to 10% HCl solution.	11.0	

Bottom of hole at 11.0' (EL.3144.5)

Operation Types: Auger, Casing Advancer, Core Barrel, Drive Casing

Sampler Types: Split Spoon, Shelby, Bulk Sample, Grab Sample, Penetrometer, Vane Shear, Special Samplers, Testpit

WATER LEVEL OBSERVATIONS

While Drilling ____ ft Upon Completion of Drilling ____ ft
Time After Drilling ____ ____ ____ ____
Depth To Water (feet) ____ ____ ____ ____
Remarks: Groundwater table not encountered

201 E Broadway STE C
Helena, MT 59602
Phone: 406-457-8252
Fax: 406-442-1158

TEST PIT LOG

PIONEER TECHNICAL SERVICES, INC.

Project Name: Missoula Compost		Project Number:	
Borehole Location: N991,253 E833,160		Borehole Number: TP-06	Sheet 1 of 1
Drilling Equipment: CAT 416D Backhoe	Hammer Type:	Driller: City of Missoula	Logger: Browne
Drilling Fluid: na	Borehole Diameter (in): na	Date Started: 12/19/2016	Date Finished: 12/19/2016

Elevation and Datum: Ground: 3155.52 Casing:

Notes: Horizontal coordinates from consumer grade GPS NAVD88 Vertical Datum

DEPTH (feet)	DRILL: OPERATION	DRILL: RESISTANCE*	DRILL: RATE (fph)	CORE PERCENT RECOVERY	ROCK QUALITY DESIGNATION (RQD)	SAMPLE	RECOVERY (%)	Photoionization Detector (PID) PPM	DRY DENSITY (pcf)	MOISTURE CONTENT (%)	LIQUID LIMIT LL	PLASTIC LIMIT PL	GRAPHIC LOG	MATERIAL DESCRIPTION	DEPTH (feet)	REMARKS
2														COMPOST, wood chips and fiber, frequent wood debris; moist; black.	2.8	
4										4				FILL, Poorly Graded GRAVEL with Sand (GP), frequent Cobbles, occasional Debris (wood); rounded; moist; dark gray; no reaction to 10% HCl.	4.2	
6														FILL, Poorly Graded GRAVEL (GP), frequent Cobbles and Debris (wood chips, tree limbs), gravels coarse grain; rounded; moist; dark gray; no reaction to 10% HCl.	7.5	Operator described fill from 4.2' to 7.5' as 'reject material'.
8														DEBRIS (saw dust, dimensional lumber, tree limbs, wood chips), occasional rubbish (plastic and metal).		
10																
12										89					12.2	Test pit terminated at 12.2' depth: maximum backhoe reach.

Bottom of hole at 12.2' (EL. 3143.3)

Operation Types: Auger, Casing Advancer, Core Barrel, Drive Casing

Sampler Types: Split Spoon, Shelby, Bulk Sample, Grab Sample, Penetrometer, Vane Shear, Special Samplers, Testpit

WATER LEVEL OBSERVATIONS

While Drilling ▽ ____ ft Upon Completion of Drilling ▼ ____ ft

Time After Drilling ____ ____ ____ ____

Depth To Water (feet) ____ ____ ____ ____ ▼

Remarks: Groundwater table not encountered

201 E Broadway STE C
Helena, MT 59602
Phone: 406-457-8252
Fax: 406-442-1158

TEST PIT LOG

PIONEER TECHNICAL SERVICES, INC.

Project Name: Missoula Compost		Project Number:	
Borehole Location: N991,273 E832,813		Borehole Number: TP-07	Sheet 1 of 1
Drilling Equipment: CAT 416D Backhoe	Hammer Type:	Driller: City of Missoula	Logger: Browne
Drilling Fluid: na	Borehole Diameter (in): na	Date Started: 12/19/2016	Date Finished: 12/19/2016

Elevation and Datum: Ground: 3150.17 Casing:

Notes: Horizontal coordinates from consumer grade GPS NAVD88 Vertical Datum

DEPTH (feet)	DRILL OPERATION	DRILL RESISTANCE*	DRILL RATE (fph)	CORE PERCENT RECOVERY	ROCK QUALITY DESIGNATION (RQD)	SAMPLE	RECOVERY (%)	Photoionization Detector (PID) PPM	DRY DENSITY (pcf)	MOISTURE CONTENT (%)	LIQUID LIMIT LL	PLASTIC LIMIT PL	GRAPHIC LOG	MATERIAL DESCRIPTION	DEPTH (feet)	REMARKS
														COMPOST, wood chips and fiber, frequent debris (lumber, wire, plastic); moist; black.		
2																
4														Rubbish (mattress box spring) at 4' depth.		
6														10" Ø and 16" Ø logs excavated near 6' depth.		
8																
10																
															11.4	Test pit terminated at 11.4' depth: maximum backhoe reach.

Bottom of hole at 11.4' (EL. 3138.8)

Operation Types: Auger; Casing Advancer; Core Barrel; Drive Casing

Sampler Types: Split Spoon; Shelby; Bulk Sample; Grab Sample; Penetrometer; Vane Shear; Special Samplers; Testpit

WATER LEVEL OBSERVATIONS

While Drilling ____ ft Upon Completion of Drilling ____ ft

Time After Drilling ____ ____ ____ ____

Depth To Water (feet) ____ ____ ____ ____

Remarks: Groundwater table not encountered

201 E Broadway STE C
Helena, MT 59602
Phone: 406-457-8252
Fax: 406-442-1158

TEST PIT LOG

PIONEER TECHNICAL SERVICES, INC.

Project Name: Missoula Compost		Project Number:	
Borehole Location: N991,794 E832,565		Borehole Number: TP-08	Sheet 1 of 1
Drilling Equipment: CAT 416D Backhoe	Hammer Type:	Driller: City of Missoula	Logger: Browne
Drilling Fluid: na	Borehole Diameter (in): na	Date Started: 12/19/2016	Date Finished: 12/19/2016

Elevation and Datum: Ground: 3150.20 Casing:

Notes: Horizontal coordinates from consumer grade GPS NAVD88 Vertical Datum

DEPTH (feet)	DRILL: OPERATION	DRILL: RESISTANCE*	DRILL: RATE (fph)	CORE PERCENT RECOVERY	ROCK QUALITY DESIGNATION (RQD)	SAMPLE	RECOVERY (%)	Photoionization Detector (PID) PPM	DRY DENSITY (pcf)	MOISTURE CONTENT (%)	LIQUID LIMIT LL	PLASTIC LIMIT PL	GRAPHIC LOG	MATERIAL DESCRIPTION	DEPTH (feet)	REMARKS
														BASE COURSE, Pit Run, Clayey GRAVEL (GC), frequent Cobbles; rounded; frozen; brown; no reaction to 10% HCl solution; fines have low plasticity.	1.1	Test pit excavated at end of previously constructed road segment.
2														SILT (ML); trace Organics (roots); moist; gray; stratified; no reaction to 10% HCl solution; non-plastic.		
										21						
4														Grades from gray to reddish brown at 3.6' depth.	4.4	
										6				Well-Graded SAND (SW); fine grain; moist; brown; no reaction to 10% HCl solution.	5.0	
6														Well-Graded GRAVEL with Sand (GW), frequent Cobbles; moist; brown; no reaction to 10% HCl solution. Maximum particle size = 10" Visual estimate (~20% Cobbles, ~40% Gravel, ~40% Sand)		
										8						
8															8.5	

Bottom of hole at 8.5' (EL. 3141.7)

Operation Types: Auger; Casing Advancer; Core Barrel; Drive Casing

Sampler Types: Split Spoon; Shelby; Bulk Sample; Grab Sample; Penetrometer; Vane Shear; Special Samplers; Testpit

WATER LEVEL OBSERVATIONS

While Drilling ▽ ft Upon Completion of Drilling ▼ ft

Time After Drilling

Depth To Water (feet) ▼

Remarks: Groundwater table not encountered

201 E Broadway STE C
Helena, MT 59602
Phone: 406-457-8252
Fax: 406-442-1158

BOREHOLE LOG

PIONEER TECHNICAL SERVICES, INC.

Project Name: Missoula Compost		Project Number:	
Borehole Location: N991,472 E833,078		Borehole Number: BH-02	Sheet 1 of 1
Drilling Equipment: Geoprobe 66DT	Hammer Type:	Driller: Pioneer	Logger: Browne
Drilling Fluid: na	Borehole Diameter (in): 3.25	Date Started: 2/8/2017	Date Finished: 2/8/2017

Elevation and Datum: Ground: Casing:

Notes: Borehole set ontop of active compost pile.
*Arbitrary ease drill rod advanced through stratum.

DEPTH (feet)	DRILL OPERATION	DRILL RESISTANCE*	DRILL RATE (fph)	CORE PERCENT RECOVERY	ROCK QUALITY DESIGNATION (RQD)	SAMPLE	RECOVERY (%)	Photoionization Detector (PID) PPM	DRY DENSITY (pcf)	MOISTURE CONTENT (%)	LIQUID LIMIT LL	PLASTIC LIMIT PL	GRAPHIC LOG	MATERIAL DESCRIPTION	DEPTH (feet)	REMARKS
5		Soft												Active COMPOST - above grade compost actively being processed.	8.0	Active compost from 0 to 8' not sampled.
10		Soft					50	0.8						COMPOST; moist; black.		Adjacent access road at El. 3154.2 (8' depth)
		Soft					50	0.8						Wood chips at 12.5' depth.	13.8	
15		Hard												Poorly Graded GRAVEL with Sand (GP); moist; gray.	16.5	
		Med.					50	0.8						Silty SAND (SM), occasional Well-Graded Sand seams; moist; dark gray.	19.0	
		Hard												Poorly Graded GRAVEL (GP), moist; grayish brown.	19.7	Geoprobe refusal at 19.7' depth.

Operation Types: Auger, Casing Advancer, Core Barrel, Drive Casing

Sampler Types: Split Spoon, Shelby, Bulk Sample, Grab Sample, Penetrometer, Vane Shear, Special Samplers, Testpit

WATER LEVEL OBSERVATIONS

While Drilling ▽ ____ ft Upon Completion of Drilling ▼ ____ ft
Time After Drilling ____ ____ ____ ____
Depth To Water (feet) ____ ____ ____ ____ ▼
Remarks: Groundwater table not encountered

201 E Broadway STE C
Helena, MT 59602
Phone: 406-457-8252
Fax: 406-442-1158

BOREHOLE LOG

PIONEER TECHNICAL SERVICES, INC.

Project Name: Missoula Compost		Project Number:	
Borehole Location: N991,452 E833,160		Borehole Number: BH-03	Sheet 1 of 1
Drilling Equipment: Geoprobe 66DT	Hammer Type:	Driller: Pioneer	Logger: Browne
Drilling Fluid: na	Borehole Diameter (in): 3.25	Date Started: 2/8/2017	Date Finished: 2/8/2017

Elevation and Datum: Ground: Casing:

Notes: *Arbitrary ease drill rod advanced through stratum.

DEPTH (feet)	DRILL OPERATION	DRILL RESISTANCE*	DRILL RATE (fph)	CORE PERCENT RECOVERY	ROCK QUALITY DESIGNATION (RQD)	SAMPLE	RECOVERY (%)	Photoionization Detector (PID) PPM	DRY DENSITY (pcf)	MOISTURE CONTENT (%)	LIQUID LIMIT LL	PLASTIC LIMIT PL	GRAPHIC LOG	MATERIAL DESCRIPTION	DEPTH (feet)	REMARKS
		Soft					30	0.4						COMPOST; moist; black.		
5		Med.					45	0.1						Frequent Wood Chips.	7.1	
		Med					50	0.2						Poorly Graded GRAVEL (GP); moist; grayish brown.	9.7	
		Hard														

Geoprobe refusal at 9.7' depth.

Operation Types: Auger, Casing Advancer, Core Barrel, Drive Casing

Sampler Types: Split Spoon, Shelby, Bulk Sample, Grab Sample, Penetrometer, Vane Shear, Special Samplers, Testpit

WATER LEVEL OBSERVATIONS

While Drilling ▽ ft Upon Completion of Drilling ▼ ft
Time After Drilling
Depth To Water (feet) ▼
Remarks: Groundwater table not encountered

201 E Broadway STE C
Helena, MT 59602
Phone: 406-457-8252
Fax: 406-442-1158

BOREHOLE LOG

PIONEER TECHNICAL SERVICES, INC.

Project Name: Missoula Compost		Project Number:	
Borehole Location: N991,472 E833,256		Borehole Number: BH-04	Sheet 1 of 1
Drilling Equipment: Geoprobe 66DT	Hammer Type:	Driller: Pioneer	Logger: Browne
Drilling Fluid: na	Borehole Diameter (in): 3.25	Date Started: 2/7/2017	Date Finished: 2/7/2017

Elevation and Datum: Ground: Casing:

Notes: *Arbitrary ease drill rod advanced through stratum.

DEPTH (feet)	DRILL OPERATION	DRILL RESISTANCE*	DRILL RATE (fph)	CORE PERCENT RECOVERY	ROCK QUALITY DESIGNATION (RQD)	SAMPLE	RECOVERY (%)	Photoionization Detector (PID) PPM	DRY DENSITY (pcf)	MOISTURE CONTENT (%)	LIQUID LIMIT LL	PLASTIC LIMIT PL	GRAPHIC LOG	MATERIAL DESCRIPTION	DEPTH (feet)	REMARKS
		Soft					75	0.7						COMPOST.		
5		Soft					65	0.8							5.0	
														COMPOST with Plastic Debris.	6.5	
		Hard												Poorly Graded GRAVEL (GP) with Sand.		
		Hard					30	0								
10																
		Hard					45	0.1							13.7	

Geoprobe refusal at 13.7' depth.

Operation Types: Auger, Casing Advancer, Core Barrel, Drive Casing

Sampler Types: Split Spoon, Shelby, Bulk Sample, Grab Sample, Penetrometer, Vane Shear, Special Samplers, Testpit

WATER LEVEL OBSERVATIONS

While Drilling ____ ft Upon Completion of Drilling ____ ft
Time After Drilling ____ ____ ____ ____
Depth To Water (feet) ____ ____ ____ ____
Remarks: Groundwater table not encountered

201 E Broadway STE C
Helena, MT 59602
Phone: 406-457-8252
Fax: 406-442-1158

BOREHOLE LOG

PIONEER TECHNICAL SERVICES, INC.

Project Name: Missoula Compost		Project Number:	
Borehole Location: N991,472 E833,256		Borehole Number: BH-05	Sheet 1 of 1
Drilling Equipment: Geoprobe 66DT	Hammer: Type:	Driller: Pioneer	Logger: Browne
Drilling Fluid: na	Borehole Diameter (in): 3.25	Date Started: 2/7/2017	Date Finished: 2/7/2017

Elevation and Datum: Ground: Casing:

Notes: *Arbitrary ease drill rod advanced through stratum.

DEPTH (feet)	DRILL OPERATION	DRILL RESISTANCE*	DRILL RATE (fph)	CORE PERCENT RECOVERY	ROCK QUALITY DESIGNATION (RQD)	SAMPLE	RECOVERY (%)	Photoionization Detector (PID) PPM	DRY DENSITY (pcf)	MOISTURE CONTENT (%)	LIQUID LIMIT LL	PLASTIC LIMIT PL	GRAPHIC LOG	MATERIAL DESCRIPTION	DEPTH (feet)	REMARKS
		Soft					45	0.8						COMPOST; moist; black.	4.0	
5		Hard					30	0.6						Poorly Graded GRAVEL with Sand (GP) and Cobbles; subrounded; moist; gray.	6.0	
		Soft												Silty GRAVEL (GM) with Organics or Compost.	8.0	Poor recovery from 6 to 8'.
10		Hard					30							Poorly Graded GRAVEL with Sand (GP) and Cobbles; subrounded; moist; gray.	11.8	

Operation Types: Auger; Casing Advancer; Core Barrel; Drive Casing

Sampler Types: Split Spoon; Shelby; Bulk Sample; Grab Sample; Penetrometer; Vane Shear; Special Samplers; Testpit

WATER LEVEL OBSERVATIONS

While Drilling ▽ ____ ft Upon Completion of Drilling ▼ ____ ft

Time After Drilling ____ ____ ____ ____

Depth To Water (feet) ____ ____ ____ ____ ▼

Remarks: Groundwater table not encountered

201 E Broadway STE C
Helena, MT 59602
Phone: 406-457-8252
Fax: 406-442-1158

BOREHOLE LOG

PIONEER TECHNICAL SERVICES, INC.

Project Name: Missoula Compost		Project Number:	
Borehole Location: N991,359 E832,983		Borehole Number: BH-06	Sheet 1 of 1
Drilling Equipment: Geoprobe 66DT	Hammer Type:	Driller: Pioneer	Logger: Browne
Drilling Fluid: na	Borehole Diameter (in): 3.25	Date Started: 2/7/2017	Date Finished: 2/7/2017

Elevation and Datum: Ground: Casing:

Notes: *Arbitrary ease drill rod advanced through stratum.

DEPTH (feet)	DRILL OPERATION	DRILL RESISTANCE*	DRILL RATE (fph)	CORE PERCENT RECOVERY	ROCK QUALITY DESIGNATION (RQD)	SAMPLE	RECOVERY (%)	Photoionization Detector (PID) PPM	DRY DENSITY (pcf)	MOISTURE CONTENT (%)	LIQUID LIMIT LL	PLASTIC LIMIT PL	GRAPHIC LOG	MATERIAL DESCRIPTION	DEPTH (feet)	REMARKS
		Soft					40	0.4						COMPOST; moist; black.		
5		Soft					40	0.2								
		Soft					25	0.3								
10															11.5	
		Soft					20	0.3						Gravel FILL with Compost and Debris (plastic bottle).		
															14.5	
15		Hard												PEAT, black; wet.	14.8	
														Silty SAND (SM), wet, dark gray.	15.0	
														Silty GRAVEL with Sand (GM), subrounded, wet, gray.	16.0	

Operation Types: Auger; Casing Advancer; Core Barrel; Drive Casing

Sampler Types: Split Spoon; Shelby; Bulk Sample; Grab Sample; Penetrometer; Vane Shear; Special Samplers; Testpit

WATER LEVEL OBSERVATIONS

While Drilling ▽ 15.0 ft Upon Completion of Drilling ▼ ft
Time After Drilling
Depth To Water (feet)
Remarks:

201 E Broadway STE C
Helena, MT 59602
Phone: 406-457-8252
Fax: 406-442-1158

BOREHOLE LOG

PIONEER TECHNICAL SERVICES, INC.

Project Name: Missoula Compost		Project Number:	
Borehole Location: N991,365 E833,063		Borehole Number: BH-07	Sheet 1 of 1
Drilling Equipment: Geoprobe 66DT	Hammer Type:	Driller: Pioneer	Logger: Browne
Drilling Fluid: na	Borehole Diameter (in): 3.25	Date Started: 2/8/2017	Date Finished: 2/8/2017

Elevation and Datum: Ground: Casing:

Notes: Borehole set ontop of active compost pile.

DEPTH (feet)	DRILL OPERATION	DRILL RESISTANCE*	DRILL RATE (fph)	CORE PERCENT RECOVERY	ROCK QUALITY DESIGNATION (RQD)	SAMPLE	RECOVERY (%)	Photoionization Detector (PID) PPM	DRY DENSITY (pcf)	MOISTURE CONTENT (%)	LIQUID LIMIT LL	PLASTIC LIMIT PL	GRAPHIC LOG	MATERIAL DESCRIPTION	DEPTH (feet)	REMARKS
5														Active COMPOST; wood chips and fiber, frequent wood debris; moist; black. Compost pile actively being processed by facility.		Borehole ground surface was 15' higher in elevation than access road located east of pile.
10																No sampling performed in active compost zone (0-15' depth).
15							0							COMPOST; wood chips and fiber, frequent wood debris;	15.0	Wood debris blocked off sampler shoe; no sample recovery.
20															21.0	Did not penetrate gravel strata underlying compost. Drill depth limited by casing available onsite (21').

Operation Types: Auger, Casing Advancer, Core Barrel, Drive Casing

Sampler Types: Split Spoon, Shelby, Bulk Sample, Grab Sample, Penetrometer, Vane Shear, Special Samplers, Testpit

WATER LEVEL OBSERVATIONS

While Drilling ▽ ft Upon Completion of Drilling ▼ ft
Time After Drilling
Depth To Water (feet)
Remarks: Groundwater table not encountered

201 E Broadway STE C
Helena, MT 59602
Phone: 406-457-8252
Fax: 406-442-1158

BOREHOLE LOG

PIONEER TECHNICAL SERVICES, INC.

Project Name: Missoula Compost		Project Number:	
Borehole Location: N991,368 E833,061		Borehole Number: BH-07A	Sheet 1 of 1
Drilling Equipment: Geoprobe 66DT	Hammer Type:	Driller: Pioneer	Logger: Browne
Drilling Fluid: na	Borehole Diameter (in): 3.25	Date Started: 2/8/2017	Date Finished: 2/8/2017

Elevation and Datum: Ground: Casing:

Notes: Borehole set ontop of active compost pile.
BH-07A set 3' north of BH-07 in attempt to get sample recovery.
*Arbitrary ease drill rod advanced through stratum.

DEPTH (feet)	DRILL OPERATION	DRILL RESISTANCE*	DRILL RATE (fph)	CORE PERCENT RECOVERY	ROCK QUALITY DESIGNATION (RQD)	SAMPLE	RECOVERY (%)	Photoionization Detector (PID) PPM	DRY DENSITY (pcf)	MOISTURE CONTENT (%)	LIQUID LIMIT LL	PLASTIC LIMIT PL	GRAPHIC LOG	MATERIAL DESCRIPTION	DEPTH (feet)	REMARKS
5														Active COMPOST; wood chips and fiber, frequent wood debris; moist; black. Compost pile actively being processed by facility.		Borehole ground surface was 15' higher in elevation than access road located east of pile.
10																No sampling performed in active compost zone (0-15' depth).
15							0							COMPOST; wood chips and fiber, frequent wood debris.	15.0	Wood debris blocked off sampler shoe; no sample recovery in compost zone.
20															21.0	Did not penetrate gravel strata underlying compost. Drill depth limited by casing available onsite (21').

Operation Types: Auger, Casing Advancer, Core Barrel, Drive Casing

Sampler Types: Split Spoon, Shelby, Bulk Sample, Grab Sample, Penetrometer, Vane Shear, Special Samplers, Testpit

WATER LEVEL OBSERVATIONS

While Drilling ▽ ____ ft Upon Completion of Drilling ▼ ____ ft
Time After Drilling ____ ____ ____ ____
Depth To Water (feet) ____ ____ ____ ____ ▼
Remarks: Groundwater table not encountered

201 E Broadway STE C
Helena, MT 59602
Phone: 406-457-8252
Fax: 406-442-1158

BOREHOLE LOG

PIONEER TECHNICAL SERVICES, INC.

Project Name: Missoula Compost		Project Number:	
Borehole Location: N991,364 E833,163		Borehole Number: BH-08	Sheet 1 of 1
Drilling Equipment: Geoprobe 66DT	Hammer Type:	Driller: Pioneer	Logger: Browne
Drilling Fluid: na	Borehole Diameter (in): 3.25	Date Started: 2/7/2017	Date Finished: 2/7/2017

Elevation and Datum: Ground: Casing:

Notes: Borehole set ontop of active compost pile.
BH-07A set 3' north of BH-07 in attempt to get sample recovery.
*Arbitrary ease drill rod advanced through stratum.

DEPTH (feet)	DRILL OPERATION	DRILL RESISTANCE*	DRILL RATE (fph)	CORE PERCENT RECOVERY	ROCK QUALITY DESIGNATION (RQD)	SAMPLE	RECOVERY (%)	Photoionization Detector (PID) PPM	DRY DENSITY (pcf)	MOISTURE CONTENT (%)	LIQUID LIMIT LL	PLASTIC LIMIT PL	GRAPHIC LOG	MATERIAL DESCRIPTION	DEPTH (feet)	REMARKS
		Soft					80	0.5						COMPOST; moist; black.	3.0	
5		Soft												FILL Silty SAND with Gravel (SM); moist; gray.	5.5	
														Saw Dust and dimensional Lumber.	6.5	

Geoprobe refusal at 6.5' depth. Dimensional lumber stuck in drive shoe.

Operation Types: Auger, Casing Advancer, Core Barrel, Drive Casing

Sampler Types: Split Spoon, Shelby, Bulk Sample, Grab Sample, Penetrometer, Vane Shear, Special Samplers, Testpit

WATER LEVEL OBSERVATIONS

While Drilling ____ ft Upon Completion of Drilling ____ ft
Time After Drilling ____ ____ ____ ____
Depth To Water (feet) ____ ____ ____ ____
Remarks: Groundwater table not encountered

201 E Broadway STE C
Helena, MT 59602
Phone: 406-457-8252
Fax: 406-442-1158

BOREHOLE LOG

PIONEER TECHNICAL SERVICES, INC.

Project Name: Missoula Compost		Project Number:	
Borehole Location: N991,362 E833,167		Borehole Number: BH-08A	Sheet 1 of 1
Drilling Equipment: Geoprobe 66DT	Hammer Type:	Driller: Pioneer	Logger: Browne
Drilling Fluid: na	Borehole Diameter (in): 3.25	Date Started: 2/8/2017	Date Finished: 2/8/2017

Elevation and Datum: Ground: Casing:

Notes: BH-08A set ~4' SE of BH-08 in attempt to get sample recovery.
*Arbitrary ease drill rod advanced through stratum.

DEPTH (feet)	DRILL OPERATION	DRILL RESISTANCE*	DRILL RATE (fph)	CORE PERCENT RECOVERY	ROCK QUALITY DESIGNATION (RQD)	SAMPLE	RECOVERY (%)	Photoionization Detector (PID) PPM	DRY DENSITY (pcf)	MOISTURE CONTENT (%)	LIQUID LIMIT LL	PLASTIC LIMIT PL	GRAPHIC LOG	MATERIAL DESCRIPTION	DEPTH (feet)	REMARKS
		Soft					90	0						COMPOST with Rubber Debris; moist; black.	3.5	
5		Soft					45	0.2						Silty SAND (SM) with Gravel, moist.	5.0	
														Saw Dust and Dimensional Lumber. Poor recovery, bottom depth of layer estimated based on drill resistance.	12.0	Post drilling: log was stuck in drive shoe blocking off sample recovery, speculate log was encountered near 5' depth.
10		Soft					5									
15		Med.					0							Unknown material description due to 0 recovery.		
20		Med. Hard Soft Hard					15							Poorly Graded GRAVEL (GP).	21.0	

Operation Types: Auger, Casing Advancer, Core Barrel, Drive Casing

Sampler Types: Split Spoon, Shelby, Bulk Sample, Grab Sample, Penetrometer, Vane Shear, Special Samplers, Testpit

WATER LEVEL OBSERVATIONS

While Drilling 17.0 ft Upon Completion of Drilling ft
Time After Drilling
Depth To Water (feet)
Remarks:

201 E Broadway STE C
Helena, MT 59602
Phone: 406-457-8252
Fax: 406-442-1158

BOREHOLE LOG

PIONEER TECHNICAL SERVICES, INC.

Project Name: Missoula Compost		Project Number:	
Borehole Location: N991,392 E833,252		Borehole Number: BH-09	Sheet 1 of 1
Drilling Equipment: Geoprobe 66DT	Hammer: Type:	Driller: Pioneer	Logger: Browne
Drilling Fluid: na	Borehole Diameter (in): 3.25	Date Started: 2/7/2017	Date Finished: 2/7/2017

Elevation and Datum: Ground: Casing:

Notes: *Arbitrary ease drill rod advanced through stratum.

DEPTH (feet)	DRILL OPERATION	DRILL RESISTANCE*	DRILL RATE (fph)	CORE PERCENT RECOVERY	ROCK QUALITY DESIGNATION (RQD)	SAMPLE	RECOVERY (%)	Photoionization Detector (PID) PPM	DRY DENSITY (pcf)	MOISTURE CONTENT (%)	LIQUID LIMIT LL	PLASTIC LIMIT PL	GRAPHIC LOG	MATERIAL DESCRIPTION	DEPTH (feet)	REMARKS
		Soft					70	0.4						COMPOST with occasional Cobble; moist; black.		
5		Soft					70	0.8								
		Med.												Poorly Graded GRAVEL with Sand (GP) and Cobbles; subrounded; moist; gray.	6.0	
		Med.					50	0.3						Silty SAND (SM); moist; very dark gray.	8.3	
10		Hard												Poorly Graded GRAVEL with Sand (GP) and Cobbles; subrounded; moist; gray. Low recovery.	10.5	
															11.8	Geoprobe refusal at 11.8' depth.

Operation Types: Auger; Casing Advancer; Core Barrel; Drive Casing

Sampler Types: Split Spoon; Shelby; Bulk Sample; Grab Sample; Penetrometer; Vane Shear; Special Samplers; Testpit

WATER LEVEL OBSERVATIONS

While Drilling ▽ ____ ft Upon Completion of Drilling ▼ ____ ft

Time After Drilling ____ ____ ____ ____

Depth To Water (feet) ____ ____ ____ ____ ▼

Remarks: Groundwater table not encountered

201 E Broadway STE C
Helena, MT 59602
Phone: 406-457-8252
Fax: 406-442-1158

BOREHOLE LOG

PIONEER TECHNICAL SERVICES, INC.

Project Name: Missoula Compost		Project Number:	
Borehole Location: N991,390 E833,324		Borehole Number: BH-10	Sheet 1 of 1
Drilling Equipment: Geoprobe 66DT	Hammer: Type:	Driller: Pioneer	Logger: Browne
Drilling Fluid: na	Borehole Diameter (in): 3.25	Date Started: 2/7/2017	Date Finished: 2/7/2017

Elevation and Datum: Ground: Casing:

Notes: *Arbitrary ease drill rod advanced through stratum.

DEPTH (feet)	DRILL OPERATION	DRILL RESISTANCE*	DRILL RATE (fph)	CORE PERCENT RECOVERY	ROCK QUALITY DESIGNATION (RQD)	SAMPLE	RECOVERY (%)	Photoionization Detector (PID) PPM	DRY DENSITY (pcf)	MOISTURE CONTENT (%)	LIQUID LIMIT LL	PLASTIC LIMIT PL	GRAPHIC LOG	MATERIAL DESCRIPTION	DEPTH (feet)	REMARKS
		Soft					80	0.6						COMPOST with Cobble and Gravel; moist; black.	3.5	
5		Soft					35	0.8						FILL Silty GRAVEL (GM) with Organics, rounded to subrounded, moist, black.	7.6	
		Soft					55	0.6						COMPOST.	10.2	
10		Hard												Poorly Graded GRAVEL (GP) with Sand and Cobbles, subrounded, moist, gray.	11.2	Geoprobe refusal at 11.2' depth.

Operation Types: Auger; Casing Advancer; Core Barrel; Drive Casing

Sampler Types: Split Spoon; Shelby; Bulk Sample; Grab Sample; Penetrometer; Vane Shear; Special Samplers; Testpit

WATER LEVEL OBSERVATIONS

While Drilling ____ ft Upon Completion of Drilling ____ ft

Time After Drilling ____ ____ ____ ____

Depth To Water (feet) ____ ____ ____ ____

Remarks: Groundwater table not encountered

201 E Broadway STE C
Helena, MT 59602
Phone: 406-457-8252
Fax: 406-442-1158

BOREHOLE LOG

PIONEER TECHNICAL SERVICES, INC.

Project Name: Missoula Compost		Project Number:	
Borehole Location: N991,316 E832,960		Borehole Number: BH-11	Sheet 1 of 1
Drilling Equipment: Geoprobe 66DT	Hammer Type:	Driller: Pioneer	Logger: Browne
Drilling Fluid: na	Borehole Diameter (in): 3.25	Date Started: 2/7/2017	Date Finished: 2/7/2017

Elevation and Datum: Ground: Casing:

Notes: *Arbitrary ease drill rod advanced through stratum.

DEPTH (feet)	DRILL OPERATION	DRILL RESISTANCE*	DRILL RATE (fph)	CORE PERCENT RECOVERY	ROCK QUALITY DESIGNATION (RQD)	SAMPLE	RECOVERY (%)	Photoionization Detector (PID) PPM	DRY DENSITY (pcf)	MOISTURE CONTENT (%)	LIQUID LIMIT LL	PLASTIC LIMIT PL	GRAPHIC LOG	MATERIAL DESCRIPTION	DEPTH (feet)	REMARKS
		Soft					70	0.5						COMPOST; moist; black.		
		Hard														
		Soft														
5		Soft					0									Rock stuck in drive shoe blocking off sample recovery. Casing removed from borehole and rock particle removed. Drill casing reinserted into hole and drilling resumed. Rock again blocked stuck in drive shoe. Geoprobe refusal at 8.75' depth.
		Hard														
		Hard					0							Poorly Graded GRAVEL (GP) - 0 recovery, speculated material description based on hard drill resistance.	8.8	

Operation Types: Auger; Casing Advancer; Core Barrel; Drive Casing

Sampler Types: Split Spoon; Shelby; Bulk Sample; Grab Sample; Penetrometer; Vane Shear; Special Samplers; Testpit

WATER LEVEL OBSERVATIONS

While Drilling ▽ ____ ft Upon Completion of Drilling ▼ ____ ft

Time After Drilling ____ ____ ____ ____

Depth To Water (feet) ____ ____ ____ ____ ▼

Remarks: Groundwater table not encountered

201 E Broadway STE C
Helena, MT 59602
Phone: 406-457-8252
Fax: 406-442-1158

BOREHOLE LOG

PIONEER TECHNICAL SERVICES, INC.

Project Name: Missoula Compost		Project Number:	
Borehole Location: N991,271 E833,134		Borehole Number: BH-13	Sheet 1 of 1
Drilling Equipment: Geoprobe 66DT	Hammer Type:	Driller: Pioneer	Logger: Browne
Drilling Fluid: na	Borehole Diameter (in): 3.25	Date Started: 2/7/2017	Date Finished: 2/7/2017

Elevation and Datum: Ground: Casing:

Notes: *Arbitrary ease drill rod advanced through stratum.

DEPTH (feet)	DRILL OPERATION	DRILL RESISTANCE*	DRILL RATE (fph)	CORE PERCENT RECOVERY	ROCK QUALITY DESIGNATION (RQD)	SAMPLE	RECOVERY (%)	Photoionization Detector (PID) PPM	DRY DENSITY (pcf)	MOISTURE CONTENT (%)	LIQUID LIMIT LL	PLASTIC LIMIT PL	GRAPHIC LOG	MATERIAL DESCRIPTION	DEPTH (feet)	REMARKS
		Soft					40	0.3						COMPOST; moist; black.		
5		Soft					70	0.4								
		Soft					55	0.4								
10																
		Soft					55	0.6							13.5	
		Med.												Poorly Graded GRAVEL (GP); moist to wet; dark gray.		
15															15.8	
		Hard					50	0.6						Poorly Graded SAND (SP), fine grain, moist, dark gray.	16.0	
														Poorly Graded GRAVEL with Silt and Sand (GP); subrounded; wet; dark gray.		
20															21.0	

Operation Types: Auger; Casing Advancer; Core Barrel; Drive Casing

Sampler Types: Split Spoon; Shelby; Bulk Sample; Grab Sample; Penetrometer; Vane Shear; Special Samplers; Testpit

WATER LEVEL OBSERVATIONS

While Drilling ▽ 15.7 ft Upon Completion of Drilling ▼ ft

Time After Drilling

Depth To Water (feet)

Remarks:

201 E Broadway STE C
Helena, MT 59602
Phone: 406-457-8252
Fax: 406-442-1158

BOREHOLE LOG

PIONEER TECHNICAL SERVICES, INC.

Project Name: Missoula Compost		Project Number:	
Borehole Location: N991,302 E833,203		Borehole Number: BH-14	Sheet 1 of 1
Drilling Equipment: Geoprobe 66DT	Hammer Type:	Driller: Pioneer	Logger: Browne
Drilling Fluid: na	Borehole Diameter (in): 3.25	Date Started: 2/6/2017	Date Finished: 2/6/2017

Elevation and Datum: Ground: Casing:

Notes: *Arbitrary ease drill rod advanced through stratum.

DEPTH (feet)	DRILL OPERATION	DRILL RESISTANCE*	DRILL RATE (fph)	CORE PERCENT RECOVERY	ROCK QUALITY DESIGNATION (RQD)	SAMPLE	RECOVERY (%)	Photoionization Detector (PID) PPM	DRY DENSITY (pcf)	MOISTURE CONTENT (%)	LIQUID LIMIT LL	PLASTIC LIMIT PL	GRAPHIC LOG	MATERIAL DESCRIPTION	DEPTH (feet)	REMARKS
		Soft					40	0.6						COMPOST; moist; black.		
		Hard														
		Soft														
5		Soft					35	0.6								
		Soft					30	0.6								
10															10.8	
		Hard												Poorly Graded GRAVEL with Sand (GP) and Cobbles; subrounded; moist; light gray.		
		Hard					40	0.6							12.5	

Geoprobe refusal at 12.5' depth.

Operation Types: Auger, Casing Advancer, Core Barrel, Drive Casing

Sampler Types: Split Spoon, Shelby, Bulk Sample, Grab Sample, Penetrometer, Vane Shear, Special Samplers, Testpit

WATER LEVEL OBSERVATIONS

While Drilling ____ ft Upon Completion of Drilling ____ ft
Time After Drilling ____ ____ ____ ____
Depth To Water (feet) ____ ____ ____ ____
Remarks: Groundwater table not encountered

201 E Broadway STE C
Helena, MT 59602
Phone: 406-457-8252
Fax: 406-442-1158

BOREHOLE LOG

PIONEER TECHNICAL SERVICES, INC.

Project Name: Missoula Compost		Project Number:	
Borehole Location: N991,276 E833,285		Borehole Number: BH-15	Sheet 1 of 1
Drilling Equipment: Geoprobe 66DT	Hammer: Type:	Driller: Pioneer	Logger: Browne
Drilling Fluid: na	Borehole Diameter (in): 3.25	Date Started: 2/6/2017	Date Finished: 2/6/2017

Elevation and Datum: Ground: Casing:

Notes: *Arbitrary ease drill rod advanced through stratum.

DEPTH (feet)	DRILL OPERATION	DRILL RESISTANCE*	DRILL RATE (fph)	CORE PERCENT RECOVERY	ROCK QUALITY DESIGNATION (RQD)	SAMPLE	RECOVERY (%)	Photoionization Detector (PID) PPM	DRY DENSITY (pcf)	MOISTURE CONTENT (%)	LIQUID LIMIT LL	PLASTIC LIMIT PL	GRAPHIC LOG	MATERIAL DESCRIPTION	DEPTH (feet)	REMARKS
		Soft					70	0.6						COMPOST, wet, dark brown.	1.5	
														FILL, Poorly Graded GRAVEL with Sand (GP); subrounded; moist; gray with red hue.	2.8	
														COMPOST, wet, dark brown.	4.2	
		Soft					35	0.7								
5		Med												FILL, Poorly Graded GRAVEL with Sand (GP); subrounded; moist; gray with red hue.	6.0	
														FILL, Silty GRAVEL with Sand (GM); subrounded; moist; very dark brown.	9.6	
		Med.					65	0.6								
10														PEAT.	10.0	
														Poorly Graded GRAVEL (GP); moist; gray matrix.	11.6	

Operation Types: Auger; Casing Advancer; Core Barrel; Drive Casing

Sampler Types: Split Spoon; Shelby; Bulk Sample; Grab Sample; Penetrometer; Vane Shear; Special Samplers; Testpit

WATER LEVEL OBSERVATIONS

While Drilling ▽ ft Upon Completion of Drilling ▼ ft
Time After Drilling
Depth To Water (feet) ▼
Remarks: Groundwater table not encountered

201 E Broadway STE C
Helena, MT 59602
Phone: 406-457-8252
Fax: 406-442-1158

BOREHOLE LOG

PIONEER TECHNICAL SERVICES, INC.

Project Name: Missoula Compost		Project Number:	
Borehole Location: N991,233 E833,943		Borehole Number: BH-16	Sheet 1 of 1
Drilling Equipment: Geoprobe 66DT	Hammer Type:	Driller: Pioneer	Logger: Browne
Drilling Fluid: na	Borehole Diameter (in): 3.25	Date Started: 2/7/2017	Date Finished: 2/7/2017

Elevation and Datum: Ground: Casing:

Notes: *Arbitrary ease drill rod advanced through stratum.

DEPTH (feet)	DRILL OPERATION	DRILL RESISTANCE*	DRILL RATE (fph)	CORE PERCENT RECOVERY	ROCK QUALITY DESIGNATION (RQD)	SAMPLE	RECOVERY (%)	Photoionization Detector (PID) PPM	DRY DENSITY (pcf)	MOISTURE CONTENT (%)	LIQUID LIMIT LL	PLASTIC LIMIT PL	GRAPHIC LOG	MATERIAL DESCRIPTION	DEPTH (feet)	REMARKS
		Soft					50	0						COMPOST; moist; black.		
5		Soft					70	0.1								
		Soft					50	0.1							8.8	
10		Hard												Poorly Graded GRAVEL (GP) with Cobbles; moist; gray with red hue.	10.1	

Geoprobe refusal at 10.1' depth.

Operation Types: Auger, Casing Advancer, Core Barrel, Drive Casing

Sampler Types: Split Spoon, Shelby, Bulk Sample, Grab Sample, Penetrometer, Vane Shear, Special Samplers, Testpit

WATER LEVEL OBSERVATIONS

While Drilling ____ ft Upon Completion of Drilling ____ ft
Time After Drilling ____ ____ ____ ____
Depth To Water (feet) ____ ____ ____ ____
Remarks: Groundwater table not encountered

201 E Broadway STE C
Helena, MT 59602
Phone: 406-457-8252
Fax: 406-442-1158

BOREHOLE LOG

PIONEER TECHNICAL SERVICES, INC.

Project Name: Missoula Compost		Project Number:	
Borehole Location: N991,182 E833,039		Borehole Number: BH-17	Sheet 1 of 1
Drilling Equipment: Geoprobe 66DT	Hammer Type:	Driller: Pioneer	Logger: Browne
Drilling Fluid: na	Borehole Diameter (in): 3.25	Date Started: 2/7/2017	Date Finished: 2/7/2017

Elevation and Datum: Ground: Casing:

Notes: *Arbitrary ease drill rod advanced through stratum.

DEPTH (feet)	DRILL OPERATION	DRILL RESISTANCE*	DRILL RATE (fph)	CORE PERCENT RECOVERY	ROCK QUALITY DESIGNATION (RQD)	SAMPLE	RECOVERY (%)	Photoionization Detector (PID) PPM	DRY DENSITY (pcf)	MOISTURE CONTENT (%)	LIQUID LIMIT LL	PLASTIC LIMIT PL	GRAPHIC LOG	MATERIAL DESCRIPTION	DEPTH (feet)	REMARKS
		Soft					30	0.1						COMPOST; moist; black.		
5		Soft					65	0.3						Occasional Cobbles at 5'.		
		Soft					60	0.2								
10		Hard												Poorly Graded GRAVEL (GP); subrounded; moist; grayish brown.	10.3	
		Hard					40								14.5	
15		Soft												Silty GRAVEL (GM); subrounded; wet; gray with rust coloring.	15.5	

Operation Types: Auger; Casing Advancer; Core Barrel; Drive Casing

Sampler Types: Split Spoon; Shelby; Bulk Sample; Grab Sample; Penetrometer; Vane Shear; Special Samplers; Testpit

WATER LEVEL OBSERVATIONS

While Drilling 14.5 ft Upon Completion of Drilling ft

Time After Drilling

Depth To Water (feet)

Remarks:

201 E Broadway STE C
Helena, MT 59602
Phone: 406-457-8252
Fax: 406-442-1158

BOREHOLE LOG

PIONEER TECHNICAL SERVICES, INC.

Project Name: Missoula Compost		Project Number:	
Borehole Location: N991,235 E833,106		Borehole Number: BH-18	Sheet 1 of 1
Drilling Equipment: Geoprobe 66DT	Hammer Type:	Driller: Pioneer	Logger: Browne
Drilling Fluid: na	Borehole Diameter (in): 3.25	Date Started: 2/6/2017	Date Finished: 2/6/2017

Elevation and Datum: Ground: Casing:

Notes: *Arbitrary ease drill rod advanced through stratum.

DEPTH (feet)	DRILL OPERATION	DRILL RESISTANCE*	DRILL RATE (fph)	CORE PERCENT RECOVERY	ROCK QUALITY DESIGNATION (RQD)	SAMPLE	RECOVERY (%)	Photoionization Detector (PID) PPM	DRY DENSITY (pcf)	MOISTURE CONTENT (%)	LIQUID LIMIT LL	PLASTIC LIMIT PL	GRAPHIC LOG	MATERIAL DESCRIPTION	DEPTH (feet)	REMARKS
		Soft					40	0.4						COMPOST; moist; black.		
5		Soft					55	0.5							7.8	
10		Hard					35	0.5						Clayey GRAVEL with Sand (GC); subrounded; moist; gray.		
15		Hard					45	0.5							15.5	

Operation Types: Auger; Casing Advancer; Core Barrel; Drive Casing

Sampler Types: Split Spoon; Shelby; Bulk Sample; Grab Sample; Penetrometer; Vane Shear; Special Samplers; Testpit

WATER LEVEL OBSERVATIONS

While Drilling ▽ ____ ft Upon Completion of Drilling ▼ ____ ft

Time After Drilling ____ ____ ____ ____

Depth To Water (feet) ____ ____ ____ ____ ▼

Remarks: Groundwater table not encountered

201 E Broadway STE C
Helena, MT 59602
Phone: 406-457-8252
Fax: 406-442-1158

BOREHOLE LOG

PIONEER TECHNICAL SERVICES, INC.

Project Name: Missoula Compost		Project Number:	
Borehole Location: N991,228 E833,201		Borehole Number: BH-19	Sheet 1 of 1
Drilling Equipment: Geoprobe 66DT	Hammer Type:	Driller: Pioneer	Logger: Browne
Drilling Fluid: na	Borehole Diameter (in): 3.25	Date Started: 2/6/2017	Date Finished: 2/6/2017

Elevation and Datum: Ground: Casing:

Notes: *Arbitrary ease drill rod advanced through stratum.

DEPTH (feet)	DRILL OPERATION	DRILL RESISTANCE*	DRILL RATE (fph)	CORE PERCENT RECOVERY	ROCK QUALITY DESIGNATION (RQD)	SAMPLE	RECOVERY (%)	Photoionization Detector (PID) PPM	DRY DENSITY (pcf)	MOISTURE CONTENT (%)	LIQUID LIMIT LL	PLASTIC LIMIT PL	GRAPHIC LOG	MATERIAL DESCRIPTION	DEPTH (feet)	REMARKS
		Soft					80	0.8						COMPOST; moist; black.		
5		Soft					55	0.6							5.5	
		Hard												Poorly Graded GRAVEL with Sand (GP) and Cobbles; subrounded, moist, gray.		
10		Hard					25	0.6							12.0	
15		Hard					35	0.6						Poorly Graded GRAVEL Silt and Sand (GP) and Cobbles, subrounded, moist, gray.	16.0	

Operation Types: Auger, Casing Advancer, Core Barrel, Drive Casing

Sampler Types: Split Spoon, Shelby, Bulk Sample, Grab Sample, Penetrometer, Vane Shear, Special Samplers, Testpit

WATER LEVEL OBSERVATIONS

While Drilling 15 ft Upon Completion of Drilling ft

Time After Drilling

Depth To Water (feet)

Remarks:

201 E Broadway STE C
Helena, MT 59602
Phone: 406-457-8252
Fax: 406-442-1158

BOREHOLE LOG

PIONEER TECHNICAL SERVICES, INC.

Project Name: Missoula Compost		Project Number:	
Borehole Location: N991,215 E833,272		Borehole Number: BH-20	Sheet 1 of 1
Drilling Equipment: Geoprobe 66DT	Hammer Type:	Driller: Pioneer	Logger: Browne
Drilling Fluid: na	Borehole Diameter (in): 3.25	Date Started: 2/6/2017	Date Finished: 2/6/2017

Elevation and Datum: Ground: Casing:

Notes: Borehole positioned on access road
*Arbitrary ease drill rod advanced through stratum.

DEPTH (feet)	DRILL OPERATION	DRILL RESISTANCE*	DRILL RATE (fph)	CORE PERCENT RECOVERY	ROCK QUALITY DESIGNATION (RQD)	SAMPLE	RECOVERY (%)	Photoionization Detector (PID) PPM	DRY DENSITY (pcf)	MOISTURE CONTENT (%)	LIQUID LIMIT LL	PLASTIC LIMIT PL	GRAPHIC LOG	MATERIAL DESCRIPTION	DEPTH (feet)	REMARKS
		Hard					50	0.3						COMPOST; frozen; black.	0.5	
														Poorly Graded GRAVEL with Sand (GP); subrounded; frozen to moist; gray with reddish hue.		
		Hard					85	0.3								
5															5.0	
														Silty GRAVEL with Sand (GM); subrounded; moist; very dark brown.	6.0	
														Poorly Graded GRAVEL with Sand (GP); subrounded; frozen to moist; gray with reddish hue.		
		Hard					50	0.3							8.3	

Geoprobe refusal at 8.3' depth.

Operation Types: Auger, Casing Advancer, Core Barrel, Drive Casing

Sampler Types: Split Spoon, Shelby, Bulk Sample, Grab Sample, Penetrometer, Vane Shear, Special Samplers, Testpit

WATER LEVEL OBSERVATIONS

While Drilling ____ ft Upon Completion of Drilling ____ ft
Time After Drilling ____ ____ ____ ____
Depth To Water (feet) ____ ____ ____ ____
Remarks: Groundwater table not encountered

Attachment C – Geotechnical Laboratory Data

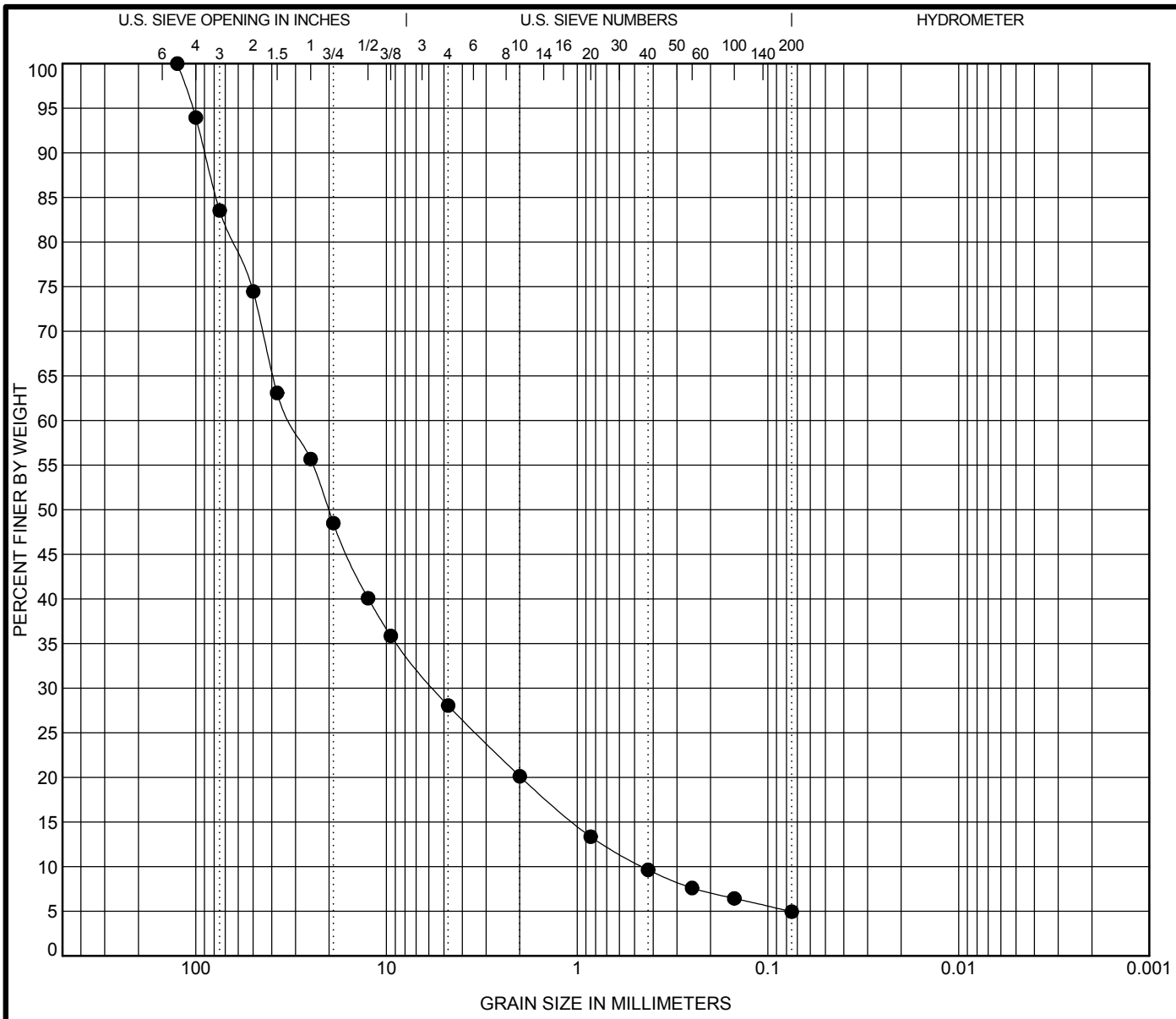

COBBLES	GRAVEL		SAND			SILT OR CLAY
	coarse	fine	coarse	medium	fine	

	Specimen Identification		Classification	LL	PL	PI	Cc	Cu
●	**TP-03**	**10.7**	**WELL-GRADED GRAVEL with SILT and SAND(GW-GM)**	**34**	**26**	**8**	**2.21**	**69.64**

	Specimen Identification		D100	D50	D15	D10	%Gravel	%Sand	%Silt	%Clay
●	**TP-03**	**10.7**	**125**	**20.125**	**1.046**	**0.455**	**55.5**	**23.1**	**4.9**	

PIONEER TECHNICAL SERVICES, INC.

GRAIN SIZE DISTRIBUTION

Project: Missoula Compost

Number:

US_GRAIN_SIZE_ASTM MISSOULA COMPOST TP LOGS.GPJ PIONEER.GDT 1/16/17

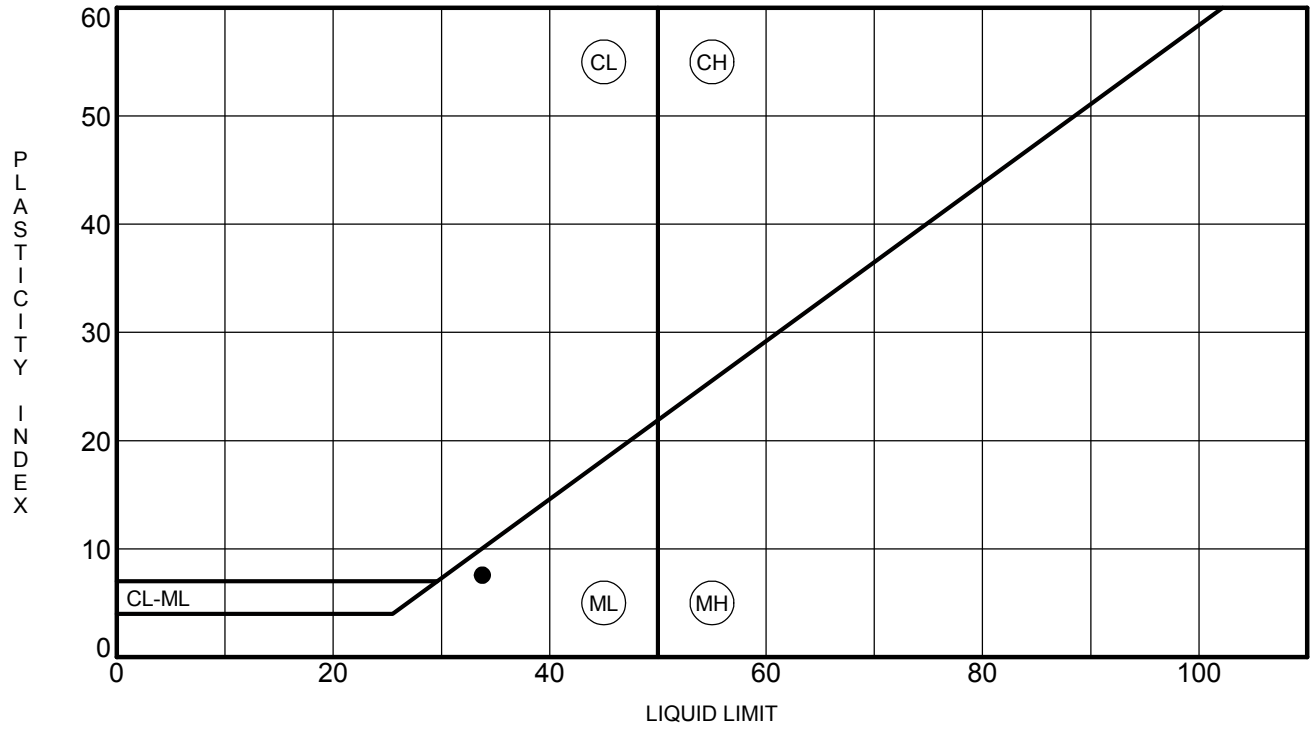

	Specimen	Depth	LL	PL	PI	Fines	Classification
●	**TP-03**	**10.7**	**34**	**26**	**8**	**5**	**WELL-GRADED GRAVEL with SILT and SAND(GW-GM)**

PIONEER TECHNICAL SERVICES, INC.

ATTERBERG LIMITS' RESULTS

Project: Missoula Compost

Number:

US_ATTERBERG_LIMITS MISSOULA COMPOST TP LOGS.GPJ PIONEER.GDT 1/16/17

Attachment D – Energy Laboratory Chain of Custody

BOTTLE ORDER 23077

SHIPPED TO: Anderson Montgomery Consulting Engineers

Contact: Paul Montgomery
1064 North Warren Street
Helena MT 59601
Phone: 4064493303
Project: Not Indicated

Order Created by: Amanda Carlson
Shipped From: Helena, MT
Ship Date: 1/30/2017
VIA: UPS Ground
Quote Used: 1363

Bottle Size/Type	Bottles Per Samp	Method	Tests	Critical Hold Time	Preservative	Notes	Num of Samp
Soil Analytical Parameters (20 Sets)							
4 oz Wide Mouth Amber Glass	2	SW8015M	Hydrocarbons, Extractable Petroleum-Scrn				1
		D2974	Percent Moisture				
		SW3550C	Moisture				
		E6010.20	Metals by ICP/ICPMS, Total				
		SW7471B	Mercury in Solid By CVAA				
		ASA33-8	Nitrate as N, KCL Extract				
		A9222 Dmod	Bacteria, Fecal Coliform-sludge	24 hrs			
		ASA24-5	Phosphorus-Olsen				
		A2540 G	Solids Content				
		E6010.20	Metals, NH4OAC Extractable				
Supplies							
Ziplock	1	FIELD	Supplies				20

Comments

3 medium coolers, 2 UPS ARS labels.

HNO3 - Nitric Acid H2SO4 - Sulfuric Acid NaOH - Sodium Hydroxide

shipped the same day as they are collected.

Material Safety Data Sheets(MSDS) Available @ EnergyLab.com ->Services -> MSDS Sheets

Corrosive Chemicals: Nitric, Sulfuric, Phosphoric, Hydrochloric Acids and Sodium Hydroxide. Zinc Acetate is a skin irritant.

Subcontracting of sample analyses to an outside laboratory may be required. If so, Energy Laboratories will utilize its branch laboratories or qualified contract laboratories for this service. Any such laboratories will be indicated within the Laboratory Analytical Report.

ENERGY LABORATORIES

Trust our People. Trust our Data.

Chain of Custody & Analytical Request Record

www.energylab.com

Account Information *(Billing information)*

Company/Name	PAUL MONTGOMERY
Contact	
Phone	406-449-3303
Mailing Address	1064 NORTH WARREN ST.
City, State, Zip	HELENA, MT 59601
Email	PAUL@a-mce.com
Receive Invoice	☐Hard Copy ☐Email
Receive Report	☐Hard Copy ☐Email
Purchase Order	
Quote	
Bottle Order	23077

Report Information *(if different than Account Information)*

Company/Name	
Contact	
Phone	
Mailing Address	
City, State, Zip	
Email	
Receive Report	☐Hard Copy ☐Email
Special Report/Formats:	☐ LEVEL IV ☐ NELAC ☐ EDD/EDT *(contact laboratory)* ☐ Other_____

Comments

ANALYSIS REQUESTED PER BOTTLE ORDER 23077, PLEASE CONFIRM TESTS WITH PAUL.

Project Information

Project Name, PWSID, Permit, etc.	MISSOULA COMPOST
Sampler Name: MIKE BROWNE	Sampler Phone: 406-498-3372
Sample Origin State: MT	EPA/State Compliance ☐ Yes ☐ No

MINING CLIENTS, please indicate sample type.
*If ore has been processed or refined, call before sending.
☐ Byproduct 11 (e)2 material ☐ Unprocessed ore (NOT ground or refined)*

Matrix Codes

A - Air
W- Water
S - Soils/Solids
V - Vegetation
B - Bioassay
O - Other
DW - Drinking Water

All turnaround times are standard unless marked as RUSH.
Energy Laboratories MUST be contacted prior to RUSH sample submittal for charges and scheduling – See Instructions Page

	Sample Identification *(Name, Location, Interval, etc.)*	Collection Date	Collection Time	Number of Containers	Matrix *(See Codes Above)*	SW8015M	D2974	SW3550C	E601D.20	SW7471B	ASA33-8	A9222 DMA	ASA24-5	A2540G	See Attached E601D.20	RUSH TAT	ELI LAB ID *Laboratory Use Only*
1	BH-14	2/6/17	16:00	3													
2	BH-15	2/6/17	15:00	3													
3																	
4																	
5																	
6																	
7																	
8																	
9																	
10																	

Custody Record MUST be signed	Relinquished by (print)	Date/Time	Signature	Received by (print)	Date/Time	Signature
	MICHAEL BROWNE	16:30 2/6/17	[signature]			
	Relinquished by (print)	Date/Time	Signature	**Received by Laboratory (print)**	**Date/Time**	**Signature**

LABORATORY USE ONLY

Shipped By	Cooler ID(s)	Custody Seals Y N C B	Intact Y N	Receipt Temp °C	Temp Blank Y N	On Ice Y N	Payment Type CC Cash Check_____	Amount $	Receipt Number *(cash/check only)*

In certain circumstances, samples submitted to Energy Laboratories, Inc. may be subcontracted to other certified laboratories in order to complete the analysis requested. This serves as notice of this possibility. All subcontracted data will be clearly notated on your analytical report.

ENERGY LABORATORIES

Trust our People. Trust our Data.

Chain of Custody & Analytical Request Record

www.energylab.com

Account Information *(Billing information)*

Company/Name	ANDERSON - MONTGOMERY
Contact	PAUL MONTGOMERY
Phone	406-449-3303
Mailing Address	1064 N. WARREN ST.
City, State, Zip	HELENA MT 59601
Email	PAUL@A-MCE.COM
Receive Invoice	☐Hard Copy ☒Email
Receive Report	☐Hard Copy ☒Email
Purchase Order	
Quote	
Bottle Order	23077

Report Information *(if different than Account Information)*

Company/Name	
Contact	
Phone	
Mailing Address	
City, State, Zip	
Email	
Receive Report	☐Hard Copy ☐Email

Special Report/Formats:
☐ LEVEL IV ☐ NELAC ☐ EDD/EDT *(contact laboratory)* ☐ Other_____

Comments

PLEASE CONFIRM TESTS W/ PAUL.

NH4OAC EX.

Project Information

Project Name, PWSID, Permit, etc.	MISSOULA COMPOST
Sampler Name	MIKE BROWNE
Sampler Phone	406-498-3372
Sample Origin State	MT
EPA/State Compliance	☐ Yes ☐ No

MINING CLIENTS, please indicate sample type.
*If ore has been processed or refined, call before sending.
☐ Byproduct 11 (e)2 material ☐ Unprocessed ore (NOT ground or refined)*

Matrix Codes
A - Air
W - Water
S - Soils/Solids
V - Vegetation
B - Bioassay
O - Other
DW - Drinking Water

All turnaround times are standard unless marked as RUSH.
Energy Laboratories MUST be contacted prior to RUSH sample submittal for charges and scheduling -- See Instructions Page

Analysis Requested

Sample Identification (Name, Location, Interval, etc.)	Collection Date	Collection Time	Number of Containers	Matrix (See Codes Above)	SW8015M	D2974	SW3550C	E6010.2D ICP/MS	SW7471B	ASA33-8	AA222 Dmod	DKA224-5	A2540G	See Attached E6010.2D	RUSH TAT	ELI LAB ID (Laboratory Use Only)
1 BH-09	2/7/17	17:15	3	S												
2 BH-08A	2/8/17	8:40	3	S												
3 BH-3	2/8/17	11:10	3	S												
4 BH-02	2/8/17	12:15	3	S												
5 BH-04	2/7/17	16:30	3	S												
6																
7																
8																
9																
10																

Custody Record MUST be signed	Relinquished by (print)	Date/Time	Signature	Received by (print)	Date/Time	Signature
	MIKE BROWNE	2/9/17 9:00		Wesley Dess	2-9-17	
	Wesley Dess	2-9-17 9:20		[illegible]	2/9/17 9:20	Brandy [illegible]

LABORATORY USE ONLY

Shipped By	Cooler ID(s)	Custody Seals	Intact	Receipt Temp	Temp Blank	On Ice	Payment Type	Amount	Receipt Number *(cash/check only)*
hand del	Y	Y N C B	Y N	-1.5°C	Y N	Y N	CC Cash Check_____	$	

In certain circumstances, samples submitted to Energy Laboratories, Inc. may be subcontracted to other certified laboratories in order to complete the analysis requested. This serves as notice of this possibility. All subcontracted data will be clearly notated on your analytical report.

ENERGY LABORATORIES
Trust our People. Trust our Data.

Chain of Custody & Analytical Request Record

www.energylab.com

Account Information (Billing information)

Company/Name	ANDERSON - MONTGOMERY
Contact	PAUL MONTGOMERY
Phone	406 - 449 - 3303
Mailing Address	1064 N. WARREN ST.
City, State, Zip	HELENA MT 59601
Email	PAUL @ A-MCE.COM
Receive Invoice	☐ Hard Copy ☒ Email
Receive Report	☐ Hard Copy ☒ Email
Purchase Order	
Quote	
Bottle Order	23077

Report Information (if different than Account Information)

Company/Name	
Contact	
Phone	
Mailing Address	
City, State, Zip	
Email	
Receive Report	☐ Hard Copy ☐ Email

Special Report/Formats: ☐ LEVEL IV ☐ NELAC ☐ EDD/EDT (contact laboratory) ☐ Other_____

Comments

PLEASE CONFIRM TESTS WITH PAUL MONTGOMERY

MB 40AC EXTRACTABLE

Project Information

Project Name, PWSID, Permit, etc.	MISSOULA COMPOST
Sampler Name	MIKE BROWNE
Sampler Phone	406-498-3372
Sample Origin State	MT
EPA/State Compliance	☐ Yes ☐ No

MINING CLIENTS, please indicate sample type.
*If ore has been processed or refined, call before sending.
☐ Byproduct 11 (e)2 material ☐ Unprocessed ore (NOT ground or refined)*

Matrix Codes
A - Air
W - Water
S - Soils/Solids
V - Vegetation
B - Bioassay
O - Other
DW - Drinking Water

All turnaround times are standard unless marked as RUSH.
Energy Laboratories MUST be contacted prior to RUSH sample submittal for charges and scheduling – See Instructions Page

Sample Identification (Name, Location, Interval, etc.)	Collection Date	Collection Time	Number of Containers	Matrix (See Codes Above)	SW8015M	D2974	SW3550C	E 6010.2D ICP/ICPMS	SW7471B	ASA33-8	D9222 Dmod	ASA24-5	A2540 G	See Attached E6010.2D	RUSH TAT	ELI LAB ID (Laboratory Use Only)
1 BH-18	2/6/17	18:05	3	S												
2 BH-17	2/7/17	8:15	3	S												
3 BH-11	2/7/17	9:10	3	S												
4 BH-06	2/7/17	10:40	3	S												
5 BH-16	2/7/17	11:35	3	S												
6 BH-13	2/7/17	12:35	3	S												
7 BH-19	2/6/17	17:20	3	S												
8 BH-10	2/7/17	14:00	3	S												
9 BH-05	2/7/17	14:40	3	S												
10																

Custody Record MUST be signed	Relinquished by (print)	Date/Time	Signature	Received by (print)	Date/Time	Signature
	MIKE BROWNE	2/7/17 16:10	[signature]			
	Relinquished by (print)	Date/Time	Signature	Received by Laboratory (print)	Date/Time	Signature

LABORATORY USE ONLY

Shipped By	Cooler ID(s)	Custody Seals	Intact	Receipt Temp	Temp Blank	On Ice	Payment Type	Amount	Receipt Number (cash/check only)
MB	384	Y N C B	Y N	°C	Y N	Y N	CC Cash Check_____	$	

In certain circumstances, samples submitted to Energy Laboratories, Inc. may be subcontracted to other certified laboratories in order to complete the analysis requested. This serves as notice of this possibility. All subcontracted data will be clearly notated on your analytical report.

APPENDIX D

GROUNDWATER MONITORING DATA

APPENDIX D

GROUNDWATER ELEVATION DATA: 2018 - 2024

APPENDIX D - GROUNDWATER ELEVATION DATA 2018 - 2024

Sample Date	MW-3 DTW	MW-7 DTW	MW-3 GW Elev	MW-7 GW Elev
3/21/2018	18.4	12.4	3132.21	3141.58
8/20/2018	11.6	15.7	3139.01	3138.28
3/14/2019	20.6	16.6	3130.01	3137.38
7/23/2019	10.5	14.7	3140.11	3139.28
3/18/2020	22	18	3128.61	3135.98
9/22/2020	13.2	17.5	3137.41	3136.48
5/19/2021	19.7	15.9	3130.91	3138.08
3/3/2022	15.6	10.4	3135.01	3143.58
7/6/2022	13.2	17.5	3137.41	3136.48
3/15/2023	22.2	18.2	3128.41	3135.78
7/9/2024	12.1	16.5	3138.51	3137.48
				3138.216364

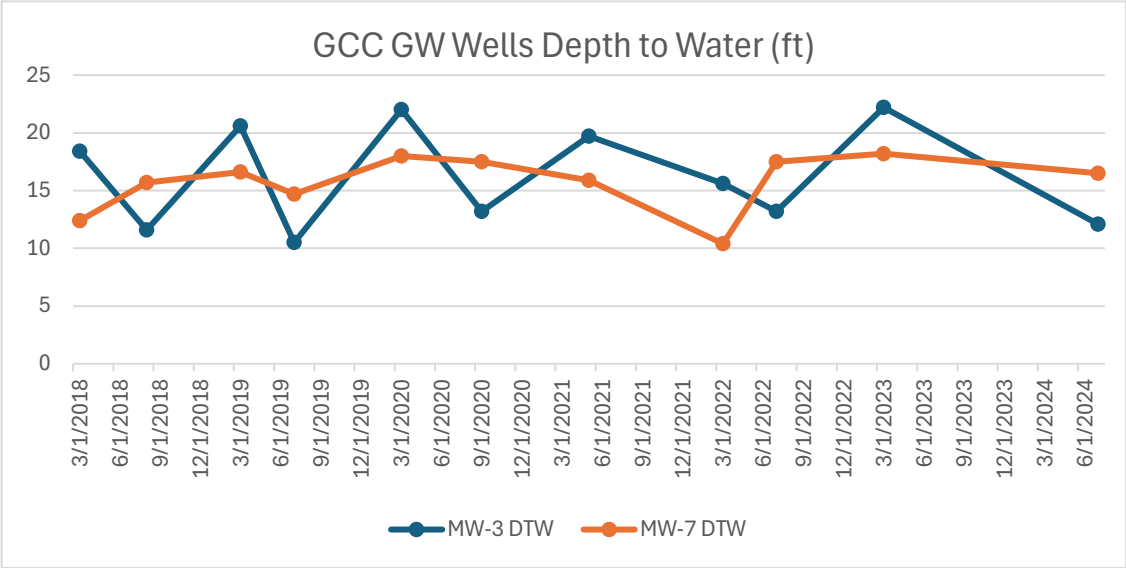

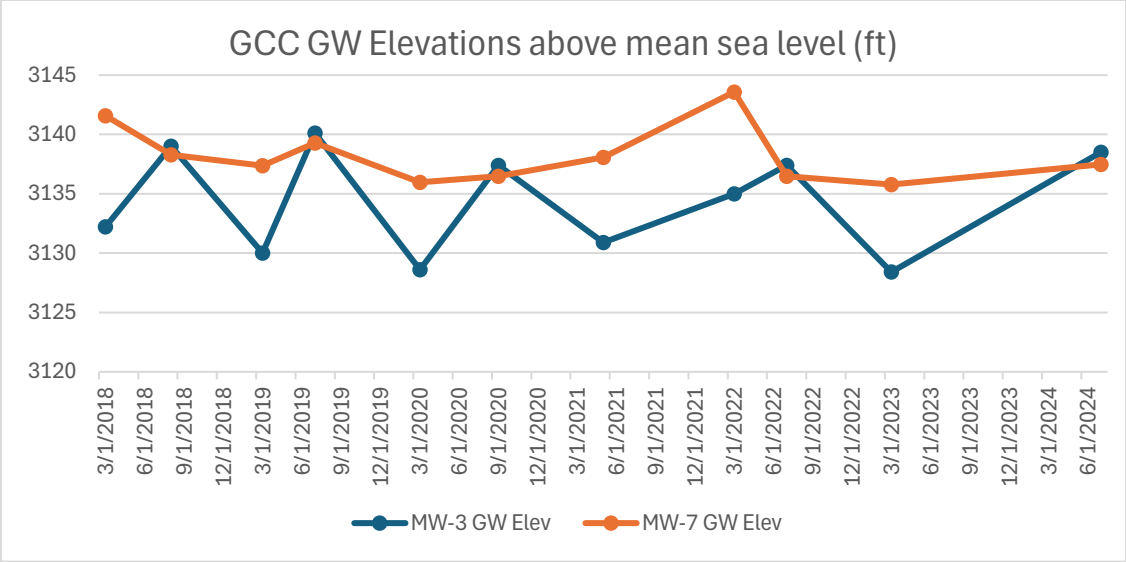

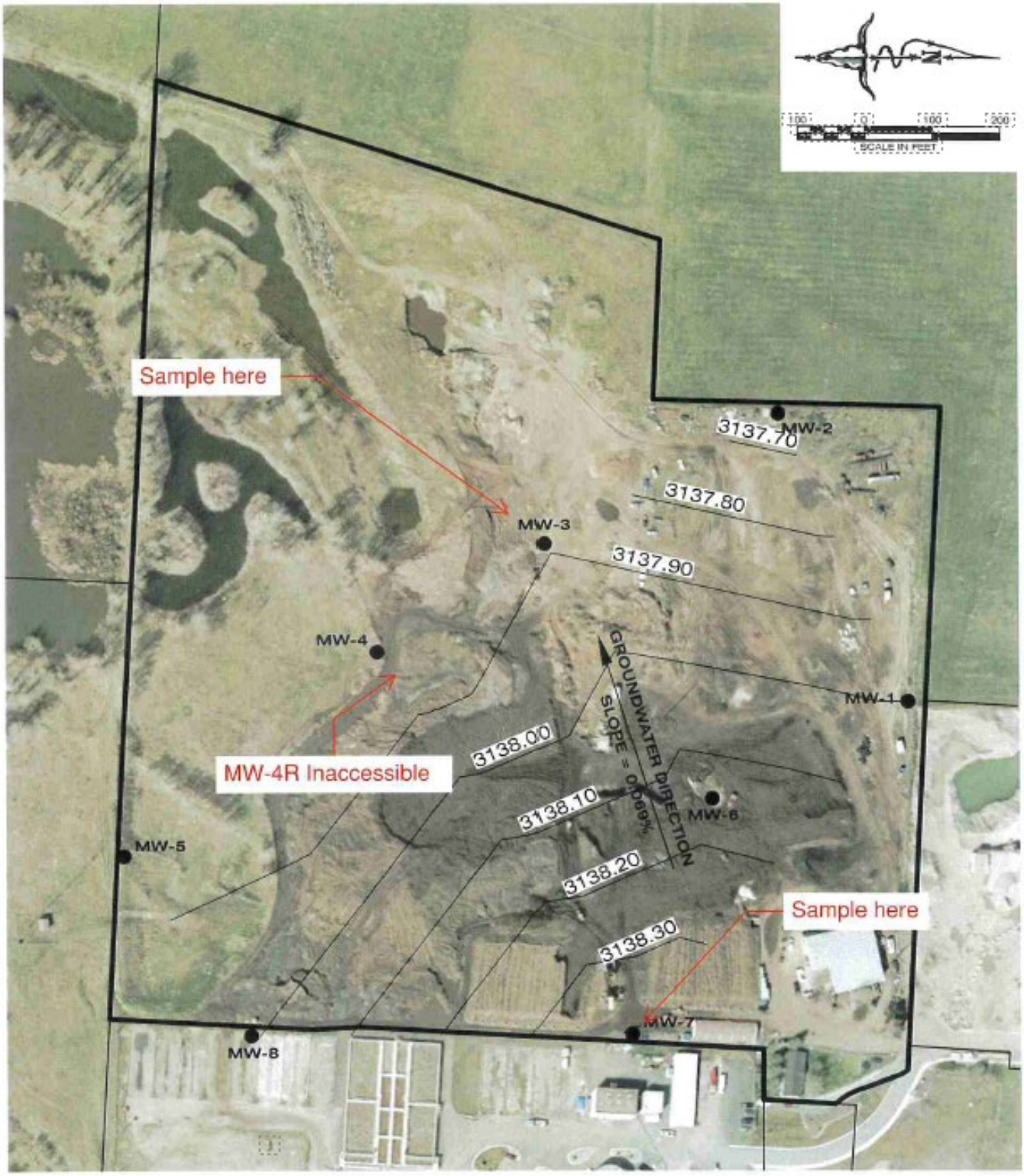

TERRITORIAL LANDWORKS, INC.

CIVIL ENGINEERING • SURVEYING • LAND USE CONSULTING

Ph: 406/721-0142 www.TerritorialLandworks.com P.O. Box 3851

POTENTIOMETRIC - WINTER 2016
GROUNDWATER SURFACE
GARDEN CITY COMPOST SITE
SEC 18, T13N, R19W, P.M.M.

PROJECT#: 11-2853
FILE: GW-SURF
DRAFTER: SA
DATE: 6/09/2017